Programming Reference

For printer model:

CL4NX Plus

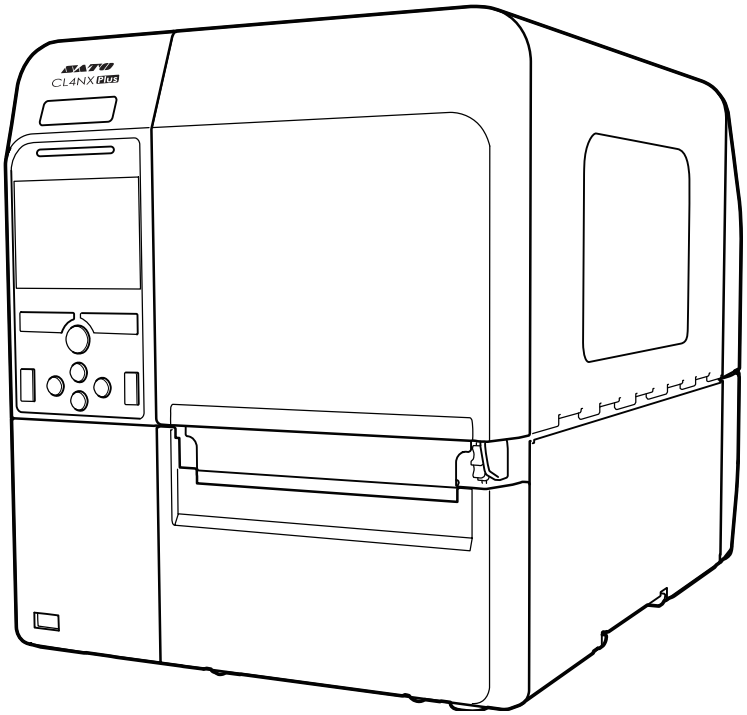

Copyrights
Any unauthorized reproduction of the contents of this document, in part or whole, is strictly prohibited.

Limitation of Liability
SATO Corporation and its subsidiaries in Japan, the U.S and other countries make no representations or warranties of any kind regarding this material, including, but not limited to, implied warranties of merchantability and fitness for a particular purpose. SATO Corporation shall not be held responsible for errors contained herein or any omissions from this material or for any damages, whether direct, indirect, incidental or consequential, in connection with the furnishing, distribution, performance or use of this material.

Specifications and contents in this document are subject to change without notice.

Trademarks
- SATO is a registered trademark of SATO Holdings Corporation and its subsidiaries in Japan, the U.S. and other countries.
- QR Code is a registered trademark of DENSO WAVE INCORPORATED.
- Wi-Fi® is a registered trademark of Wi-Fi Alliance.
- Bluetooth is a trademark of Bluetooth SIG, Inc., U.S.A.
- EPC global is a registered trademark of EPC global,INC.
- Windows is a registered trademark of Microsoft Corporation in the United States and/or other countries.
- Wi-Fi Direct™, WPA™ and WPA2™ are trademarks of Wi-Fi Alliance.
- The N Mark is a trademark or registered trademark of NFC Forum, Inc. in the United States and in other countries.
- All other trademarks are the property of their respective owners.

Version: CL4NX Plus-r01-01-08-19PR
©2019 SATO Corporation. All rights reserved.

Table of Contents

Part 1 SBPL Commands..... 10

Command list..... 10

Initial Value of Operation Settings..... 16

Font list..... 17

Example of Command reference..... 20

Control commands..... 22

[ESC+A] Start Code..... 22

[ESC+Z] Stop Code..... 23

[ESC+Q] Print Quantity..... 24

[ESC+ID] Job ID Number..... 25

[ESC+WK] Job Name..... 27

[ESC+CR] Status 5 reply check setting..... 28

Print Position Commands..... 29

[ESC+H] Horizontal Print Position..... 29

[ESC+V] Vertical Print Position..... 30

Modification Commands..... 31

[ESC+P] Character Pitch..... 31

[ESC+L] Enlargement..... 33

[ESC+PS] Proportional Pitch..... 34

[ESC+PR] Release Proportional Pitch..... 35

[ESC+%] Rotation..... 36

[ESC+F] Sequential Number..... 38

[ESC+FW] Ruled / Grid Line Print..... 40

[ESC+FC] Print Circle..... 42

[ESC+FT] Print Triangle..... 44

[ESC+(] Reverse Color Print..... 46

[ESC+KC] Kanji Code..... 48

[ESC+&] Store Form Overlay..... 50

[ESC+/] Recall Form Overlay..... 52

[ESC+0] Partial Edit..... 53

[ESC+WD] Partial Copy..... 54

[ESC+J] Journal Print..... 56

[ESC+RF] Recall Font & Logo..... 57

[ESC+RM] Mirror Image..... 58

[ESC+KS] Kanji Set..... 60

[ESC+AL] Field alignment..... 61

Font commands..... 67

[ESC+X20] X20 Font (Basic size 5 x 9 dots)..... 67
[ESC+X21] X21 Font (Basic size 17 x 17 dots)..... 69
[ESC+X22] X22 Font (Basic size 24 x 24 dots)..... 71
[ESC+X23] X23 Font (Basic size 48 x 48 dots)..... 73
[ESC+X24] X24 Font (Basic size 48 x 48 dots)..... 75
[ESC+XU] XU Font (Basic size 5 x 9 dots)..... 77
[ESC+XS] XS Font (Basic size 17 x 17 dots)..... 79
[ESC+XM] XM Font (Basic size 24 x 24 dots)..... 81
[ESC+XB] XB Font (Basic size 48 x 48 dots)..... 83
[ESC+XL] XL Font (Basic size 48 x 48 dots)..... 85
[ESC+OA] OCR-A Font..... 87
[ESC+OB] OCR-B Font..... 89
[ESC+U] U Font (Basic size 5 x 9 dots)..... 91
[ESC+S] S Font (Basic size 8 x 15 dots)..... 93
[ESC+M] M Font (Basic size 13 x 20 dots)..... 95
[ESC+WB] WB Font (Basic size 18 x 30 dots)..... 97
[ESC+WL] WL Font (Basic size 28 x 52 dots)..... 99
[ESC+$] Outline Font Design..... 101
[ESC+$=] Outline Font Print..... 103
[ESC+RD] CG Font..... 105
[ESC+RG] Multiple Language..... 110
[ESC+RH] Scalable Font..... 115
[ESC+K1] 16 x 16 dots Kanji in Horizontal Line..... 120
[ESC+K2] 24 x 24 dots Kanji in Horizontal Line..... 122
[ESC+K3] 22 x 22 dots Kanji in Horizontal Line..... 124
[ESC+K4] 32 x 32 dots Kanji in Horizontal Line..... 126
[ESC+K5] 40 x 40 dots Kanji in Horizontal Line..... 128
[ESC+K8] 16 x 16 dots Kanji in Horizontal Line with 1-byte Character..... 130
[ESC+K9] 24 x 24 dots Kanji in Horizontal Line with 1-byte Character..... 132
[ESC+KA] 22 x 22 dots Kanji in Horizontal Line with 1-byte Character..... 134
[ESC+KB] 32 x 32 dots Kanji in Horizontal Line with 1-byte Character..... 136
[ESC+KD] 40 x 40 dots Kanji in Horizontal Line with 1-byte Character..... 138
[ESC+k1] 16 x 16 dots Kanji in Vertical Line..... 140
[ESC+k2] 24 x 24 dots Kanji in Vertical Line..... 142
[ESC+k3] 22 x 22 dots Kanji in Vertical Line..... 144
[ESC+k4] 32 x 32 dots Kanji in Vertical Line..... 146
[ESC+k5] 40 x 40 dots Kanji in Vertical Line..... 148
[ESC+k8] 16 x 16 dots Kanji in Vertical Line with 1-byte Character..... 150
[ESC+k9] 24 x 24 dots Kanji in Vertical Line with 1-byte Character..... 152
[ESC+kA] 22 x 22 dots Kanji in Vertical Line with 1-byte Character..... 154

[ESC+kB] 32 x 32 dots Kanji in Vertical Line with 1-byte Character..... 156
[ESC+kD] 40 x 40 dots Kanji in Vertical Line with 1-byte Character..... 158
[ESC+T1] 16 x 16 dots External Font Registration..... 160
[ESC+T2] 24 x 24 dots External Font Registration..... 163
[ESC+K1(K2)] Horizontal Writing External Font Call..... 166
[ESC+k1(k2)] Horizontal Writing External Font Call..... 168

Barcode Commands..... 170

[ESC+B] Barcode (Ratio 1:3)..... 175
[ESC+D] Barcode (Ratio 1:2)..... 178
[ESC+D] ~ [ESC+d] Barcode (with HRI)..... 181
[ESC+BD] Barcode (Ratio 2:5)..... 183
[ESC+BT] Barcode Ratio Registration..... 186
[ESC+BW] Barcode Print by Specified Ratio..... 187
[ESC+BC] CODE93 Barcode..... 191
[ESC+BF] UPC Add-on (Bookland)..... 193
[ESC+BG] CODE128 (128A, 128B, 128C) Barcode..... 195
[ESC+BI] GS1-128 (UCC/EAN128) (Standard Carton ID Only)..... 199
[ESC+BP] POSTNET..... 201
[ESC+BS] USPS Barcode..... 203
[ESC+EU] Composite Symbol..... 205
[ESC+BL] UPC-A Barcode (Without HRI)..... 212
[ESC+BL] ~ [ESC+d] UPC-A Barcode (Specifying HRI)..... 214
[ESC+BM] UPC-A Barcode (With HRI)..... 216

2D Codes..... 218

[ESC+2D10] PDF417..... 218
[ESC+2D12] Micro PDF417..... 221
[ESC+2D20] MaxiCode..... 224
[ESC+2D30] QR Code (Model 2)..... 227
[ESC+2D31] QR Code (Model 1)..... 232
[ESC+2D32] Micro QR Code..... 236
[ESC+2D34] GS1 QR Code (Model 2)..... 239
[ESC+2D50] DataMatrix (ECC200)..... 267
[ESC+2D51] GS1 DataMatrix..... 271
[ESC+2D70] Aztec Code..... 275
[ESC+BQ] QR Code (Compatible command)..... 279
[ESC+BV] MaxiCode (Compatible command)..... 304
[ESC+BK] PDF417 (Compatible command)..... 306
[ESC+BX] DataMatrix (ECC200) (Compatible command)..... 310
[ESC+DC] DataMatrix (ECC200) Data Specify (Compatible command)..... 311
[ESC+FX] DataMatrix (ECC200) Sequential Number (Compatible command)..... 312
[ESC+QV] QR code version..... 314

Graphic Commands..... 316

[ESC+G] Graphic Print....316
[ESC+GM] BMP File Print....318
[ESC+GP] PCX File Print....319

System Commands....320

[ESC+CS] Print Speed....320
[ESC+#F] Print Darkness....322
[ESC+#E] Print Darkness (Compatible command)....324
[ESC+A1] Media Size....326
[ESC+A3] Base Reference Point....328
[ESC+EP] Print End Position....330
[ESC+~] Multiple Cut....333
[ESC+CT] Cut Number Unit....334
[ESC+NC] Eject and Cut....335
[ESC+~A] Cut Number Unit....337
[ESC+~B] Eject and Cut....338
[ESC+*] Memory Clear....340
[ESC+@] Offline....342
[ESC+C] Reprint....343
[ESC+E] Auto Line Feed....344
[ESC+PO] Offset....346
[ESC+IG] Sensor Type....347
[ESC+PH] Print Method....348
[ESC+PM] Print mode....349
[ESC+KM] Mincho (Kanji)....351
[ESC+KG] Gothic (Kanji)....352
[ESC+CE] European Code Page....353
[ESC+TK] Forced Tear Off....355
[ESC+TW] Option Waiting Time....356
[ESC+CL] Delete CR/LF....357
[ESC+VB] Barcode Checker....358
[ESC+#] Base Reference Point....360

Calendar Commands....361

[ESC+WT] Calendar Setup....361
[ESC+WP] Calendar Arithmetic (Add)....362
[ESC+WA] Calendar Print....363
[ESC+WU] Expanded Calendar Print....366

Memory Card Commands....369

[ESC+CC] Card Slot for Use....369
[ESC+FM] Memory Card Initialization....370
[ESC+BJF] Memory Card Initialization....371
[ESC+FP] Memory Card Status Print....372
[ESC+BJS] Memory Card Status Print....373

[ESC+&S] Form Overlay Registration....374
[ESC+&R] Form Overlay Call....377
[ESC+YS] Format Registration....378
[ESC+/N] Registration of Field....381
[ESC+YR] Format Call....383
[ESC+/D] Print of Field....384
[ESC+GI] Registration of Graphic....385
[ESC+GR] Graphic Call....387
[ESC+GT] BMP File Registration....388
[ESC+GC] BMP File Call....389
[ESC+PI] PCX File Registration....390
[ESC+PY] PCX File Call....391
[ESC+*] Memory Card Clear....392
[ESC+T1] Memory Card 16 x 16 dots External Font Registration....394
[ESC+T2] Memory Card 24 x 24 dots External Font Registration....396
[ESC+K1(K2)] Horizontal Writing External Font Call....398
[ESC+k1(k2)] Vertical Writing External Font Call....400
[ESC+BJ ESC+BJD] TrueType Font Registration (Compatible command)....402
[ESC+BJT] TrueType Font Call (Compatible command)....403

Intelligent Command....404

[ESC+IK] Label Feed Control....404

XML Commands....407

[ESC+/Y] Register Print Template Name....407
[ESC+/X] Set XML Variable Name....408
[ESC+/R] Remove Print Template....409
[ESC+/S] Set Print Template Name....410
[ESC+/G] Get Print Template Information....411

Common commands for all languages....413

[DC2+PA] Printer Setting Command....414
[DC2+PB] Printer Setting Information Acquisition....447
[DC2+PC] Printer Device Information Acquisition....450
[DC2+PD] Each Sensor Information Acquisition....456
[DC2+PG] Printer Status Information Acquisition....458
[DC2+PH] Cancel Request....462
[DC2+PI] Application Change....463
[DC2+PN] Request to Return Label Pitch Size....465
[DC2+DB] Initialization....467
[DC2+DC] Reset....470
[DC2+DD] Power OFF....471
[DC2+DE] File Download....472
[DC2+DF] File Name Information Acquisition....475
[DC2+DG] File Information Acquisition....477

[DC2+DH] File Deletion....479

Time zone list....481

Part 2 Interface Specification.... 486

Overview.... 486

Overview....486

Combination of interface....487

Communication Protocol.... 488

Types of Communication Protocol and Reception Mode....488

Return status....490

Return Status of Status3....492

Return Status of Status4....496

Return Status of Status5....501

READY/BUSY....507

XON/XOFF....508

Status3....509

Return Sequence....509

Reference flow chart....511

Status4....513

Return Sequence....513

Status5....516

Receiving Buffer Control....516

Return sequence....516

RS-232C....520

Basic Specifications....520

READY/BUSY....522

Connection diagram....522

I/O signal....522

Timing Chart of Multiple Receive....523

XON/XOFF....524

Connection diagram....524

I/O signal....524

Timing Chart of Multiple Receive....525

Status5 Return....526

Connection diagram....526

I/O signal....526

Timing Chart....527

Status4....530

Connection diagram....530

I/O signal....530

Timing Chart....531
Status3 Return....534
Connection diagram....534
I/O signal....534
Timing Chart....535
Notes....537
IEEE1284....538
Basic Specifications....538
Connection diagram....540
Connector pin assignment....541
I/O signal....542
Timing Chart of Multiple Receive....543
USB....545
Basic Specifications....545
Connector Pin Assignment....546
LAN/Wireless LAN....547
Basic Specifications (LAN)....547
LAN settings / Display items....548
Basic Specifications(Wireless LAN)....552
Wireless LAN setting/Display items....555
Software Specifications....557
Specifications of TCP/IP....557
Specifications of LPR....557
Specifications of FTP....557
NTP（Network Time Protocol）....558
Specifications of HTTP/HTTPS....559
Wireless LAN setting....561
802.1x authentication and certification....561
Socket Communication....562
Connection and Disconnection of Session....563
TCP Connection Queue....565
Printer Status....567
Switching LAN and WLAN....570
Firewall....571
Firewall function....571
Allowed services and ports setting....571
Notes....573
Common with LAN /Wireless LAN interface....573
Wireless LAN interface....573
LAN Interface....573
Bluetooth....574

Basic Specifications....574
Bluetooth Settings....577
CRC Transmission Data....578
CRC Calculation Data....579
Example of Transmission Data....580
CRC Error Display....581
Transmission Sequence....582
Normal End....582
In case where communication is lost while transferring print data....586
In case where communication is lost while transferring status after receiving print data....587
Abnormal end when CRC check is enabled....588

External signal interface....589

Basic Specifications....589
Connector Pin Assignment....591
I/O signal....593
1) Input Signal....593
2) Output signal....595
3) Output waiting for dispenser....597
Timing Waveform....598

USB HOST....600

Basic Specifications....600
Connector Pin Assignment....601

NFC....602

Basic Specifications....602
Tag Mode....604
Data Format....605
Transmission Sequence....606
Pass-through Mode....607
Data Format....608
Transmission Sequence....609
Handover Mode....616

Notes about the Interface....617

Part 1 SBPL Commands

Command list

Control

Command		Function
ESC+A	<A>	Start Code
ESC+Z	<Z>	Stop Code
ESC+Q	<Q>	Print Quantity
ESC+ID	<ID>	Job ID Number
ESC+WK	<WK>	Job Name
ESC+CR	<CR>	Status 5 reply check setting

Print Position

Command		Function
ESC+H	<H>	Horizontal Print Position
ESC+V	<V>	Vertical Print Position

Modification

Command		Function
ESC+P	<P>	Character Pitch
ESC+L	<L>	Enlargement
ESC+PS	<PS>	Proportional Pitch
ESC+PR	<PR>	Release Proportional Pitch
ESC+%	<%>	Rotation
ESC+F	<F>	Sequential Number
ESC+FW	<FW>	Ruled/Grid Line Print
ESC+FC	<FC>	Print of Circles
ESC+FT	<FT>	Print Triangles
ESC+(	<(>	Reverse Color Print
ESC+KC	<KC>	Kanji Code
ESC+&	<&>	Store Form Overlay
ESC+/	</>	Recall Form Overlay
ESC+0	<0>	Partial Edit
ESC+WD	<WD>	Partial Copy
ESC+J	<J>	Journal Print
ESC+RF	<RF>	Recall Font & Logo
ESC+RM	<RM>	Mirror Image
ESC+KS	<KS>	Kanji set

Command		Function
ESC+AL	<AL>	Field alignment

Font

Command		Function
ESC+X20	<X20>	X20 Font (Basic size 5 x 9 dots)
ESC+X21	<X21>	X21 Font (Basic size 17 x 17 dots)
ESC+X22	<X22>	X22 Font (Basic size 24 x 24 dots)
ESC+X23	<X23>	X23 Font (Basic size 48 x 48 dots)
ESC+X24	<X24>	X24 Font (Basic size 48 x 48 dots)
ESC+XU	<XU>	XU Font (Basic size 5 x 9 dots)
ESC+XS	<XS>	XS Font (Basic size 17 x 17 dots)
ESC+XM	<XM>	XM Font (Basic size 24 x 24 dots)
ESC+XB	<XB>	XB Font (Basic size 48 x 48 dots)
ESC+XL	<XL>	XL Font (Basic size 48 x 48 dots)
ESC+OA	<OA>	OCR-A Font
ESC+OB	<OB>	OCR-B Font
ESC+U	<U>	U font
ESC+S	<S>	S font
ESC+M	<M>	M font
ESC+WB	<WB>	WB font
ESC+WL	<WL>	WL font
ESC+$	<$>	Outline Font Design
ESC+$=	<$=>	Outline Font Print
ESC+RD	<RD>	CG Font
ESC+RG	<RG>	Multiple language
ESC+RH	<RH>	Scalable font
ESC+K1	<K1>	16 x 16 dots Kanji in Horizontal Line
ESC+K2	<K2>	24 x 24 dots Kanji in Horizontal Line
ESC+K3	<K3>	22 x 22 dots Kanji in Horizontal Line
ESC+K4	<K4>	32 x 32 dots Kanji in Horizontal Line
ESC+K5	<K5>	40 x 40 dots Kanji in Horizontal Line
ESC+K8	<K8>	16 x 16 dots Kanji in Horizontal Line with 1-byte Character
ESC+K9	<K9>	24 x 24 dots Kanji in Horizontal Line with 1-byte Character
ESC+KA	<KA>	22 x 22 dots Kanji in Horizontal Line with 1-byte Character
ESC+KB	<KB>	32 x 32 dots Kanji in Horizontal Line with 1-byte Character
ESC+KD	<KD>	40 x 40 dots Kanji in Horizontal Line with 1-byte Character
ESC+k1	<k1>	16 x 16 dots Kanji in Vertical Line
ESC+k2	<k2>	24 x 24 dots Kanji in Vertical Line
ESC+k3	<k3>	22 x 22 dots Kanji in Vertical Line
ESC+k4	<k4>	32 x 32 dots Kanji in Vertical Line
ESC+k5	<k5>	40 x 40 dots Kanji in Vertical Line

Command		Function
ESC+k8	<k8>	16 x 16 dots Kanji in Vertical Line with 1-byte Character
ESC+k9	<k9>	24 x 24 dots Kanji in Vertical Line with 1-byte Character
ESC+kA	<kA>	22 x 22 dots Kanji in Vertical Line with 1-byte Character
ESC+kB	<kB>	32 x 32 dots Kanji in Vertical Line with 1-byte Character
ESC+kD	<kD>	40 x 40 dots Kanji in Vertical Line with 1-byte Character
ESC+T1	<T1>	16 x 16 dots External Font Registration
ESC+T2	<T2>	24 x 24 dots External Font Registration
ESC+K1(K2)	<K1(K2)>	Recall Horizontal Writing External Character
ESC+k1(k2)	<k1(k2)>	Recall Vertical Writing External Character

Barcode

Command		Function
ESC+B	<B>	Barcode (Ratio 1:3)
ESC+D	<D>	Barcode (Ratio 1:2)
ESC+D~ESC+d	<D>~<d>	Barcode (with HRI)
ESC+BD	<BD>	Barcode (Ratio 2:5)
ESC+BT	<BT>	Barcode Ratio Registration
ESC+BW	<BW>	Barcode Print by Specified Ratio
ESC+BC	<BC>	CODE93 Barcode
ESC+BF	<BF>	UPC Add-on
ESC+BG	<BG>	CODE128 Barcode
ESC+BI	<BI>	GS1-128 (UCC/EAN128)(Standard Carton ID Only)
ESC+BP	<BP>	POSTNET
ESC+BS	<BS>	USPS Barcode
ESC+EU	<EU>	Composite Symbol
ESC+BL	<BL>	UPC-A Barcode (Without HRI)
ESC+BL~ESC+d	<BL>~<d>	UPC-A Barcode (Specifying HRI)
ESC+BM	<BM>	UPC-A Barcode (With HRI)

2D Code

Command		Function
ESC+2D10	<2D10>	PDF417
ESC+2D12	<2D12>	Micro PDF417
ESC+2D20	<2D20>	MaxiCode
ESC+2D30	<2D30>	QR Code (Model 2)
ESC+2D31	<2D31>	QR Code (Model 1)
ESC+2D32	<2D32>	Micro QR Code
ESC+2D31	<2D34>	GS1 QR Code (Model 2)
ESC+2D50	<2D50>	DataMatrix (ECC200)
ESC+2D51	<2D51>	GS1 DataMatrix
ESC+2D70	<2D70>	Aztec Code

Command		Function
ESC+BQ	<BQ>	QR Code
ESC+BV	<BV>	MaxiCode
ESC+BK	<BK>	PDF417
ESC+BX	<BX>	DataMatrix (ECC200)
ESC+DC	<DC>	DataMatrix (ECC200) Data Specify
ESC+FX	<FX>	DataMatrix (ECC200) Sequential Number
ESC+QV	<QV>	QR code version

Graphic

Command		Function
ESC+G	<G>	Graphic Print
ESC+GM	<GM>	BMP File Print
ESC+GP	<GP>	PCX File Print

System

Command		Function
ESC+CS	<CS>	Print Speed
ESC+#F	<#F>	Print Darkness
ESC+#E	<#E>	Print Darkness (Compatible command)
ESC+A1	<A1>	Media Size
ESC+A3	<A3>	Base Reference Point
ESC+EP	<EP>	Print End Position
ESC+~	<~>	Multiple Cut
ESC+CT	<CT>	Cut Number Unit
ESC+NC	<NC>	Eject and Cut
ESC+~A	<~A>	Cut Number Unit
ESC+~B	<~B>	Eject and Cut
ESC+*	<*>	Clear
ESC+@	<@>	Offline
ESC+C	<C>	Reprint
ESC+E	<E>	Auto Line Feed
ESC+PO	<PO>	Offset
ESC+IG	<IG>	Sensor Type
ESC+PH	<PH>	Print Method
ESC+PM	<PM>	Specify operation mode
ESC+KM	<KM>	Mincho (Kanji)
ESC+KG	<KG>	Gothic (Kanji)
ESC+CE	<CE>	European Code Page
ESC+TK	<TK>	Forced Tear Off
ESC+TW	<TW>	Option Waiting Time
ESC+CL	<CL>	Delete CR/LF

Command		Function
ESC+VB	<VB>	Barcode Checker
ESC+#	<#>	Base Reference Point

Calendar

Command		Function
ESC+WT	<WT>	Calendar Setup*1
ESC+WP	<WP>	Calendar Arithmetic*1
ESC+WA	<WA>	Calendar Print*1
ESC+WU	<WU>	Expanded Calendar Print*1

*1 Option: Calendar IC

Memory Card

Command		Function
ESC+CC	<CC>	Card Slot for Use
ESC+FM	<FM>	Memory Card Initialization
ESC+BJF	<BJF>	Memory Card Initialization
ESC+FP	<FP>	Memory Card Status Print
ESC+BJS	<BJS>	Memory Card Status Print
ESC+&S	<&S>	Store Form Overlay
ESC+&R	<&R>	Recall Form Overlay
ESC+YS	<YS>	Format Registration
ESC+/N	</N>	Registration of Field
ESC+YR	<YR>	Format Call
ESC+/D	</D>	Print of Field
ESC+GI	<GI>	Registration of Graphic
ESC+GR	<GR>	Graphic Call
ESC+GT	<GT>	BMP File Registration
ESC+GC	<GC>	BMP File Call
ESC+PI	<PI>	PCX File Registration
ESC+PY	<PY>	PCX File Call
ESC+*	<*>	Memory Card Clear
ESC+T1	<T1>	Memory Card 16 x 16 dots External Font Registration
ESC+T2	<T2>	Memory Card 24 x 24 dots External Font Registration
ESC+K1(K2)	<K1(K2)>	Memory Card Horizontal Writing External Font Call
ESC+k1(k2)	<k1(k2)>	Memory Card Vertical Writing External Font Call
ESC+BJ ESC+BJD	<BJ> <BJD>	TrueType Font Registration

Command		Function
ESC+BJT	<BJT>	TrueType Font Call

Intelligent

Command		Function
ESC+IK	<IK>	Label Feed Control

XML

Command		Function
ESC+/Y	</Y>	Register Print Template Name
ESC+/X	</X>	Set XML Variable Name
ESC+/R	</R>	Remove Print Template
ESC+/S	</S>	Set Print Template Name
ESC+/G	</G>	Get Print Template Information

Common commands for all languages

Command	Function
DC2+PA	Printer Settings
DC2+PB	Printer Information Acquisition
DC2+PC	Printer Device Information Acquisition
DC2+PD	Each Sensor Information Acquisition
DC2+PG	Printer Status Information Acquisition
DC2+PH	Cancel Request
DC2+PI	Application Change
DC2+PN	Request to return label pitch size
DC2+DB	Initialize
DC2+DC	Reset
DC2+DD	Power Off
DC2+DE	File Download
DC2+DF	File Name Information Acquisition
DC2+DG	File Information Acquisition
DC2+DH	File Deletion

Initial Value of Operation Settings

The initial values of operation setting are as follows:

Item	8 dots/mm	12 dots/mm	24 dots/mm
Print speed	6 inch/s Range: 2 to 14	6 inch/s Range: 2 to 14	4 inch/s Range: 2 to 6
Range of print darkness	A	A	A
Print darkness	5 Range: 1, 2, 3, 4, 5, 6, 7, 8, 9,10	5 Range: 1, 2, 3, 4, 5, 6, 7, 8, 9,10	5 Range: 1, 2, 3, 4, 5, 6, 7, 8, 9,10
Start point correction	+0	+0	+0
Designation of proportional pitch	Propotional pitch	Propotional pitch	Propotional pitch

Font list

Specify ESC + (relevant font command) to use residential fonts.

Font	Font type	Pitch
OCR-A (8 dots/mm)	Bitmap [OCR-A font] 15 x 22 dots	Fixed
OCR-B (8 dots/mm)	Bitmap [OCR-B font] 20 x 24 dots	Fixed
OCR-A (12 dots/mm)	Bitmap [OCR-A font] 22 x 33 dots	Fixed
OCR-B (12 dots/mm)	Bitmap [OCR-B font] 30 x 36 dots	Fixed
OCR-A (24 dots/mm)	Bitmap [OCR-A font] 44 x 66 dots	Fixed
OCR-B (24 dots/mm)	Bitmap [OCR-B font] 60 x 72 dots	Fixed
XU	Bitmap [Helvetica] 5 x 9 dots	Fixed / Proportional
XS	Bitmap [Universe Condensed Bold] 17 x 17 dots	Fixed / Proportional
XM	Bitmap [Universe Condensed Bold] 24 x 24 dots	Fixed / Proportional
XB	Bitmap [Universe Condensed Bold] 48 x 48 dots	Fixed / Proportional
XL	Bitmap [Sans Serif] 48×48 dots	Fixed / Proportional
X20	Bitmap [X20 font] 5 x 9 dots	Fixed
X21	Bitmap [X21 font] 17 x 17 dots	Fixed / Proportional
X22	Bitmap [X22 font] 24 x 24 dots	Fixed / Proportional
X23	Bitmap [X23 font] 48 x 48 dots	Fixed / Proportional
X24	Bitmap [X24 font] 48 x 48 dots	Fixed / Proportional
U	Bitmap [U font] 5 x 9 dots	Fixed
S	Bitmap [S font] 8 x 15 dots	Fixed
M	Bitmap [M font] 13 x 20 dots	Fixed
WB	Bitmap [WB font] 18 x 30 dots	Fixed
WL	Bitmap [WL font] 28 x 52 dots	Fixed
K1(k1)	Bitmap [Kanji font] 16 x 16 dots	Fixed
K2(k2)	Bitmap [Kanji font] 24 x 24 dots	Fixed
K3(k3)	Bitmap [Kanji font] 22 x 22 dots	Fixed
K4(k4)	Bitmap [Kanji font] 32 x 32 dots	Fixed
K5(k5)	Bitmap [Kanji font] 40 x 40 dots	Fixed
$(shape) $=(print)	Outline font	Fixed / Proportional
	Kanji Outline font	Fixed
RD	CG font [SATO CG Sleek]	Fixed / Proportional
	CG font [SATO CG Stream]	Fixed / Proportional
RG	Multiple language font	Fixed / Proportional
RH	Scalable font	Fixed / Proportional

Expanded font

Font can be expanded by a factor of 1 to 36.

Internal bitmap fonts can also be expanded with a factor of 1 to 36.

Example: When a font in a size of 5 dots of width and 9 dots of height is expanded by a factor of 3, the resulting font has a width of 15 dots and a height of 27 dots.

The input of enlargement ratio (height x enlargement ratio, width x enlargement ratio) for characters to be printed is done as described below:

Width x expansion factor = width parameter setting value

Height x expansion factor = height parameter setting value

The Enlargement <L> decides the expansion of the character. This parameter is set as factor.

Example: If setting the factor to: <L>0304, the character is expanded by a factor of 3 in horizontal direction (width) and a factor of 4 in vertical direction (height).

If an expansion factor is specified, also the pitch between the characters is automatically determined.

Fixed pitch / proportional pitch

There are fonts which can select both the fixed pitch and the proportional pitch. You can set the proportional pitch by <PS> command and release it by <PR> command or select [Application] menu > [SBPL] > [Font Settings] on the screen.

Depending on the font type, the width of the proportional pitch does differ. Kata-kana is not affected by the proportional pitch. However, when proportional pitch is applied to Kata-kana, the side space of characters will be narrowed.

At the fixed pitch, the character width is according to the relevant font size selected.

Difference between outline font and bitmap font

Regarding the bitmap font, the height and the width of the font are predefined. The height of the bitmap font is a little bit larger than the width.

The bitmap font is the largest in the font matrix.

For the font type and size refer to the font list previously described.

Regarding the outline font, if the height and the width of the font are set properly, the smooth scaling algorithm of the printer allows a well-balanced font. It is also possible to define some style options like a gray scale and a shadow setting.

Setting change of Eurocode

See below for the valid range of font command and Eurocode and Code Page that is enabled when you change the Eurocode settings in GUI or DC2 commands.

The values for ESC, ENQ, SOH, STX, ETX, CAN, DEL, DC1, DC2 in standard mode and ESC, ENQ, SOH, STX, ETX, CAN, DEL, DC1, DC2 in non-standard mode is out of valid range.

Command	Command name	The range of Eurocode	Code Page
<XU>	XU font (Basic size 5×9 dots)	Eurocode shall be 00H-FFH for compatibility.	DOS 857 DOS 858 For compatibility DOS 737 DOS 852 DOS 866
<XS>	XS font (Basic size 17×17 dots)		
<XM>	XM font (Basic size 24×24 dots)		
<XB>	XB font (Basic size 48×48 dots)		
<XL>	XL font (Basic size 48×48 dots)		
<U>	U font		
<S>	S font		
<M>	M font		
<WB>	WB font		
<WL>	WL font		
<$=>	Outline Font Print		DOS 858
<RD>	CG font	Eurocode shall be 00H-FFH considering the use of GID (Glyph Index).	DOS 857 DOS 858
<RG>	Multiple language	Eurocode shall be 20H-FFH because the range of character code is more than 20H. Note: A space will be printed in case if less than 20H is specified.	
<RH>	Scalable font	Eurocode shall be 00H-FFH considering the use of GID (Glyph Index).	

Limitation on non-standard codes

Non-standard codes are available only in its default setting (Refer to the following chart). If control code is set to the same code as high-order bytes of Kanji by changing the code intentionally, it is not possible to use half-size characters which correspond to control code.

Function	Contents	Initial value	
		Standard	Non-standard
Protocol code	STX	02H	7BH
	ETX	03H	7DH
	ESC	1BH	5EH
	ENQ	05H	4CH
	CAN	18H	21H

Example of Command reference

1 2

[ESC+L] Enlargement

3 4

Hexadecimal code	ESC	L	Parameter
	<1B>$_{16}$	<4C>$_{16}$	aabb

5

Initial value	aa=01, bb=01

6

Valid range and term of command	When the power is OFF	The set parameter is not maintained.
	Valid range within items	The set parameter is valid until the next valid setting.
	Valid range between items	The set parameter becomes initial value at the next item <A>.

7 **[Function]**

Specifying the enlargement ratio of font.

8 **[Format]**

<L>aabb

- Parameter

  a [Horizontal enlargement ratio] = Valid range: 01 to 36
  b [Vertical enlargement ratio] = Valid range: 01 to 36

9 **[Coding Example]**

Horizontal enlargement ratio: 4 times, Vertical enlargement ratio: 3 times

<A>
<V>100<H>200<P>3**<L>0403**<XM>ABCD
<Q>2
<Z>

10 **[Supplementary Explanation]**

- Enlarges the character pitch as well. When Character Pitch <P> is used at the same time, the parameter value of horizontal enlargement ratio specified in Enlargement <L> will be reflected in the subsequent specification <P>.

11 **[Note]**

- If increasing the enlargement ratio, design the print format that does not exceed printing area.

12 **[Valid Commands]**

Font	<XU>	<XS>	<XM>	<XB>	<XL>	<OA>	<OB>	<K1>	<K2>	<K3>
	<K4>	<K5>	<K8>	<K9>	<KA>	<KB>	<KD>	<k1>	<k2>	<k3>
	<k4>	<k5>	<k8>	<k9>	<kA>	<kB>	<kD>	<U>	<S>	<M>
	<WB>	<WL>	<X20>	<X21>	<X22>	<X23>	<X24>			
Modification	<P>	<RF>								
Graphic	<G>	<GM>	<GP>							
Memory card	<GR>	<GC>	<PY>							

1. Indicates command code.

2. Indicates command name.

3. Indicates command in Hexadecimal code.

4. Indicates parameter to be described in command.

5. Indicates initial value for command.

6. Indicates valid range of command.

- When the power is OFF
  - The set parameter is maintained.
  - The set parameter is not maintained.
  - The set command is not maintained.
- Valid range within items
  - The set parameter is valid until the next specification is made.
  - The set parameter becomes invalid.
  - The set command becomes invalid.
- Valid range between items
  - The set parameter becomes initial value at the next item <A>.
  - The set parameter is valid until the next specification is made.
  - The set parameter becomes invalid.
  - The set command becomes invalid.

7. Explains the function of command.

8. Explains the command and required parameter.

<L>AABB indicates the command ESC+L (<1B>$_{16}$<4C>$_{16}$) and two types of parameters such as "aa" and "bb".

9. Shows the example of how the command is used.

This is the coding example programmed in BASIC output to the printer connected with RS-232C.

```
10   ESC$=CHR$(&H1B)
20   OPEN   “COM1:9600,N,8,1,RS,BIN” FOR OUTPUT AS #1
30   PRINT   #1,ESC$;“A”;
40   PRINT   #1,ESC$;“V100”;ESC$;“H200”;
50   PRINT   #1,ESC$;“P3”;ESC$;“L0403”;
60   PRINT   #1,ESC$;“XMABCD”;
70   PRINT   #1,ESC$;“Q2”;
80   PRINT   #1,ESC$;“Z”;
90   CLOSE   #1
100   END
```

10. Provides the supplemental information of command function and parameter.

11. Provides notes and restriction for the use of command.

12. Shows the commands that come under the influence of used commands.

Control commands

[ESC+A] Start Code

Hexadecimal code	ESC	A	Parameter
	<1B>$_{16}$	<41>$_{16}$	None
Initial value	None		

Valid range and term of command	When the power is OFF	The set command is not maintained.
	Valid range within items	The set command becomes invalid.
	Valid range between items	The set command becomes invalid.

[Function]

Specifying the start of data transmission.

[Format]

<A>

[Coding Example]

<A>
<V>100<H>200<P>2<L>0202<XM>ABCD
<Q>2
<Z>

[Supplementary Explanation]

- Indicates the start of item and to be placed at the head of item.
- Use Start Code <A> and Stop Code <Z> as a pair of commands.

[Note]

- Setting value of all commands excluding a part of system commands will be set to default.
- If this command is not specified, printing will not be performed.

[ESC+Z] Stop Code

Hexadecimal code	ESC	Z	Parameter
	<1B>$_{16}$	<5A>$_{16}$	None
Initial value	None		

Valid range and term of command	When the power is OFF	The set command is not maintained.
	Valid range within items	The set command becomes invalid.
	Valid range between items	The set command becomes invalid.

[Function]

Specifying the end of data transmission.

[Format]

<Z>

[Coding Example]

<A>
<V>100<H>200<P>2<L>0202<XM>ABCD
<Q>2
<Z>

[Supplementary Explanation]

- Indicates the end of item and to be placed at the tail of item.
- Use Start Code <A> and Stop Code <Z> as a pair of commands.

[Note]

- If this command is not specified, printing will not be performed.

[ESC+Q] Print Quantity

Hexadecimal code	ESC	Q	Parameter
	<1B>$_{16}$	<51>$_{16}$	aaaaaa
Initial value	aaaaaa=1		

Valid range and term of command	When the power is OFF	The set parameter is not maintained.
	Valid range within items	The set parameter becomes invalid.
	Valid range between items	The set parameter becomes invalid.

[Function]

Specifying the number of labels to print.

[Format]

<Q>aaaaaa

- Parameter

  a [Number of labels to print] = Valid range: 1 to 999999

[Coding Example]

Number of labels: 2

<A>
<V>100<H>200<P>2<L>0202<XM>ABCD
<Q>2
<Z>

[Supplementary Explanation]

- Print contents specified by Start Code <A> and Stop Code <Z> are regarded as 1 label, and the number of reprints can be specified.
- Use this command prior to Stop Code <Z>.

[Points]

- Reprint will be performed based on the specified print quantity. If specifying Sequential Number <F>, the value of sequential number that was set up for that field portion will be printed.
- When this command is used in combination with Multiple Cut <~>, the actual print quantity becomes the specified print quantity multipled by the specified value for the multiple cut.

[ESC+ID] Job ID Number

Hexadecimal code	ESC	ID	Parameter
	<1B>$_{16}$	<49>$_{16}$<44>$_{16}$	aa aaaaa
Initial value	a=<20>$_{16}$		

Valid range and term of command	When the power is OFF	The set parameter is not maintained.
	Valid range within items	The set parameter is valid until the next specification is made.
	Valid range between items	The set parameter becomes invalid.

[Function]

Specifying job ID number for status return.

[Format]

<ID>aa

<ID>aaaaa

- Parameter

  a [Job ID number]
  Valid range:
  00 to 99 (2 digits)
  ***** or 00000 to 99999 (5 digits)

[Coding Example]

Job ID Number: 01

```
<A>
<ID>01
<V>200<H>100<P>0<$>B,100,100,6
<$=>SATOPRINTER
<Q>2
<Z>
```

[Supplementary Explanation]

- When status return is used for interface protocol, the specified job ID number can be set to the telegraphic status.
- Status can be confirmed by sending status request (ENQ).
- Include this command within items and use between Start Code <A> and Stop Code <Z>.
- When Status 5 is used, the valid range of job ID becomes "00000 to 99999" and "*****." If "*****" is specified, the item will not be managed by Job ID number.

[Points]

- In status return interface protocol, this command becomes valid when status request (ENQ) is received while printing (QTY≠0, includes at the time of Offline and Error).
- In status return communication protocol, if status request (ENQ) is received when printing is not in progress (QTY=0, No received data when power is ON), space (20H) will be set to status and returned.

- When Job ID Number <ID> is used more than twice within the items of Start Code <A> and Stop Code <Z>, the last specified value becomes valid.

[ESC+WK] Job Name

Hexadecimal code	ESC	WK	Parameter
	<1B>$_{16}$	<57>$_{16}$ <4B>$_{16}$	aaaaaaaaaaaaaaaa
Initial value	aaaaaaaaaaaaaaaa=<20> $_{16}$		

Valid range and term of command	When the power is OFF	The set parameter is not maintained.
	Valid range within items	The set parameter is valid until the next specification is made.
	Valid range between items	The set parameter becomes invalid.

[Function]

Specifying job name for status return.

[Format]

<WK>aaaaaaaaaaaaaaaa

- Parameter

  a [Job Name] = ASCII code 16-digit, Shift JIS Kanji 8-digit

[Coding Example]

Job name: SATO

```
<A>
<ID>01
<WK>SATO
<V>200<H>100<P>0<$>B,100,100,6
<$=>SATOPRINTER
<Q>2
<Z>
```

[Supplementary Explanation]

- When Status4 is used for interface protocol, specified job name can be set to the telegraphic status.
- Status can be confirmed by sending status request (ENQ).
- Include this command within items and use between Start Code <A> and Stop Code <Z>.
- This command can be used in combination with Job ID Number <ID>.

[Points]

- In status return interface protocol, this command becomes valid when status request (ENQ) is received while printing (QTY≠0, includes at the time of Offline and Error).
- In status return communication protocol, if status request (ENQ) is received when printing is not in progress (QTY=0, No received data when power is ON), space (20H) will be set to status and returned.
- When Job name <WK> is used more than twice within the items of Start Code <A> and Stop Code <Z>, the last specified value becomes valid.
- For more information, refer to the "Interface Specifications."

[ESC+CR] Status 5 reply check setting

Hexadecimal code	ESC	CR	Parameter
	<1B>$_{16}$	<43>$_{16}$<52>$_{16}$	a(,b)
Initial value	a=0		

Valid range and term of command	When the power is OFF	The set parameter is maintained.
	Valid range within items	The set parameter is valid until the next specification is made.
	Valid range between items	The set parameter becomes invalid.

[Function]

The BCC check of return and the item number check function are set up of the status5.

[Format]

<CR>a(,b)

- Parameter

  a [BCC check]
  0 : BCC check disable (initial value)
  1 : BCC check enable
  b [Item number check] = 0 : Not checked(fixed value)(omissible)

[Coding Example]

<A>
<ID>*****
<CR>1,0
<Z>

[Supplementary Explanation]

- [item number check] is a fixed value.
- This command cannot be used at the same time the print data.
- Use is possible only during status5 protocol.

Print Position Commands

[ESC+H] Horizontal Print Position

Hexadecimal code	ESC	H	Parameter
	<1B>$_{16}$	<48>$_{16}$	aaaa
Initial value	aaaa=1		

Valid range and term of command	When the power is OFF	The set parameter is not maintained.
	Valid range within items	The set parameter is valid until the next specification is made.
	Valid range between items	The set parameter becomes initial value at the next item <A>.

[Function]

Specifying horizontal print position from its start point by dot.

[Format]

<H>aaaa

- Parameter

  a [Horizontal Print Position] = Refer to [Initial Value and Valid Range of Parameter] section below.

[Coding Example]

Horizontal print position: 200 dots

<A>
<V>100**<H>200**<P>2<L>0202<XM>ABCD
<Q>2
<Z>

[Supplementary Explanation]

- Specifying the start of horizontal position for the print of text, barcode, ruled line and graphic.

[Points]

- Any contents such as text, barcode, graphic exceed printing area will not be printed.

[Initial Value and Valid Range of Parameter]

Head density	Initial value	Valid range (dots)
203 dpi	1	1 to 832
305 dpi	1	1 to 1248
609 dpi	1	1 to 2496

[ESC+V] Vertical Print Position

Hexadecimal code	ESC	V	Parameter
	<1B>$_{16}$	<56>$_{16}$	aaaaa
Initial value	aaaaa=1		

Valid range and term of command	When the power is OFF	The set parameter is not maintained.
	Valid range within items	The set parameter is valid until the next specification is made.
	Valid range between items	The set parameter becomes initial value at the next item <A>.

[Function]

Specifying vertical print position from its start point by dot.

[Format]

<V>aaaaa

- Parameter

  a [Vertical Print Position] = Refer to [Initial Value and Valid Range of Parameter] section below.

[Coding Example]

Vertical print position: 100 dots

<A>
<V>100<H>200<P>2<L>0202<XM>ABCD
<Q>2
<Z>

[Supplementary Explanation]

- Specifying the start of vertical position for the print of text, barcode, ruled line and graphics.

[Points]

- Any contents such as text, barcode, graphic exceed printing area will not be printed.

[Initial Value and Valid Range of Parameter]

Head density	Initial value	Valid range (dots)
203 dpi	1	1 to 20000
305 dpi	1	1 to 18000
609 dpi	1	1 to 9600

Modification Commands

[ESC+P] Character Pitch

Hexadecimal code	ESC	P	Parameter
	<1B>$_{16}$	<50>$_{16}$	aa
Initial value	aa=02		

Valid range and term of command	When the power is OFF	The set parameter is not maintained.
	Valid range within items	The set parameter is valid until the next valid setting.
	Valid range between items;	The set parameter becomes initial value at the next item <A>.

[Function]

Specifying character pitch by dot.

[Format]

<P>aa

- Parameter

  a [Character pitch] = Valid range: 00 to 99 dots

[Coding Example]

Character pitch: 10

<A>
<V>200<H>100**<P>10**<L>0202<XM>ABCD
<Q>2
<Z>

[Supplementary Explanation]

- Character pitch means the character gap or font gap when selecting font or barcode.
- Specified character pitch will be widened based on the ratio of Enlargement <L>.
- The Character Pitch <P> maintains the parameter only in the field. Even if linefeed code [CR] is specified in Auto Linefeed <E>, the character pitch remains the same without returning to initial value. Start Code <A> can be used to reset to the initial value.
- By specifying Character Pitch <P> just before the barcode specification, pitch command becomes valid for barcode module.

  Object barcode: NW-7, CODE39, Industrial 2of5, Matrix 2of5
  For more information, refer to “(3) Intercharacter gap” in “Barcode Command.”
- Data specification except numeric value or specification of over-digit will give the initial value.

[Valid Commands]

Font	<XU>	<XS>	<XM>	<XB>	<XL>	<OA>	<OB>	<RD>	<$=>	<K1>
	<K2>	<K3>	<K4>	<K5>	<K8>	<K9>	<KA>	<KB>	<KD>	<k1>
	<k2>	<k3>	<k4>	<k5>	<k8>	<k9>	<kA>	<kB>	<kD>	<U>
	<S>	<M>	<WB>	<WL>	<X20>	<X21>	<X22>	<X23>	<X24>	
Barcode	<B>	<D>	<D><d>	<BD>	<BT>	<BW>				
Modification	<RF>									

[ESC+L] Enlargement

Hexadecimal code	ESC	L	Parameter
	<1B>$_{16}$	<4C>$_{16}$	aabb
Initial value	aa=01, bb=01		

Valid range and term of command	When the power is OFF	The set parameter is not maintained.
	Valid range within items	The set parameter is valid until the next specification is made.
	Valid range between items	The set parameter becomes initial value at the next item <A>.

[Function]

Specifying the enlargement ratio of font.

[Format]

<L>aabb

- Parameter

  a [Horizontal enlargement ratio] = Valid range: 01 to 36
  b [Vertical enlargement ratio] = Valid range: 01 to 36

[Coding Example]

Horizontal enlargement ratio: 4 times, Vertical enlargement ratio: 3 times

<A>
<V>200<H>100<P>3**<L>0403**<XM>ABCD
<Q>2
<Z>

[Supplementary Explanation]

- Enlarges the character pitch as well. When Character Pitch <P> is used at the same time, the parameter value of horizontal enlargement ratio specified in Enlargement <L> will be reflected in the subsequent specification <P>.

[Points]

- If increasing the enlargement ratio, design the print format that does not exceed printing area.

[Valid Commands]

Font	<XU>	<XS>	<XM>	<XB>	<XL>	<OA>	<OB>	<K1>	<K2>	<K3>
	<K4>	<K5>	<K8>	<K9>	<KA>	<KB>	<KD>	<k1>	<k2>	<k3>
	<k4>	<k5>	<k8>	<k9>	<kA>	<kB>	<kD>	<U>	<S>	<M>
	<WB>	<WL>	<X20>	<X21>	<X22>	<X23>	<X24>			
Modification	<P>	<RF>								
Graphic	<G>	<GM>	<GP>							
Memory Card	<GR>	<GC>	<PY>							

[ESC+PS] Proportional Pitch

Hexadecimal code	ESC	PS	Parameter
	<1B>$_{16}$	<50>$_{16}$<53>$_{16}$	None
Initial value	None		

Valid range and term of command	When the power is OFF	The set command is not maintained.
	Valid range within items	The set command is valid until the next specification is made.
	Valid range between items	The set parameter becomes initial value at the next item <A>.

[Function]

Specifying the proportional pitch.

[Format]

<PS>

[Coding Example]

<A>
<PS>
<V>100<H>200<P>2<L>0202<XM>ABCD
<Q>2
<Z>

[Supplementary Explanation]

- If data other than specified is set, proportional print will not be performed.
- Initial value is "Proportional pitch" enabled by Proportional Pitch <PS>.

[Valid Commands]

Font	<XU>	<XS>	<XM>	<XB>	<XL>	<RD>	<RG>	<RH>		
	<X21>	<X22>	<X23>	<X24>	<$><$=>					
Modification	<RF>									

[ESC+PR] Release Proportional Pitch

Hexadecimal code	ESC	PR	Parameter
	<1B>$_{16}$	<50>$_{16}$<52>$_{16}$	None
Initial value	None		

Valid range and term of command	When the power is OFF	The set command is not maintained.
	Valid range within items	The set command is valid until the next specification is made.
	Valid range between items	The set parameter becomes initial value at the next item <A>.

[Function]

Specifying the release of proportional pitch.

[Format]

<PR>

[Coding Example]

<A>
<PR>
<V>100<H>200<P>2<L>0202<XM>ABCD
<Q>2
<Z>

[Supplementary Explanation]

- Initial value is "Proportional pitch" enabled by Proportional Pitch <PS>.

[Valid Commands]

Font	<XU>	<XS>	<XM>	<XB>	<XL>	<RD>	<RG>	<RH>		
	<X21>	<X22>	<X23>	<X24>	<$><$=>					
Modification	<RF>									

[ESC+%] Rotation

Hexadecimal code	ESC	%	Parameter
	<1B>$_{16}$	<25>$_{16}$	a
Initial value	a=0		

Valid range and term of command	When the power is OFF	The set parameter is not maintained.
	Valid range within items	The set parameter is valid until the next specification is made.
	Valid range between items	The set parameter becomes initial value at the next item <A>.

[Function]

Specifying the counter-clockwise rotation of font and barcode.

[Format]

<%>a

- Parameter

a [Rotative direction]
0: Parallel 1 (0 degree)
1: Serial 1 (90-degree)
2: Parallel 2 (180-degree)
3: Serial 2 (270-degree)

[Coding Example]

Font rotation: Parallel 2 (180-degree), Barcode rotation: Serial 1 (90-degree)

<A>
<%>2
<V>100<H>400<P>3<L>0403<XM>ABCD
<%>1
<V>400<H>200<BD>103160*123*
<Q>2
<Z>

[Supplementary Explanation]

- Position specification of Vertical Print Position <V> and Horizontal Print Position <H> are the absolute value from its base reference point.
- When the value of parameter "a" is between 4 and 9, it will be processed as a command error and ignored. When the value other than numeric is specified, this will be ignored and printing will be performed at 0 degree.
- Print of barcode using Serial 1 or Serial 2 may cause blur. Drop the print speed for rotation print of Serial 1 and Serial 2 for better performance.

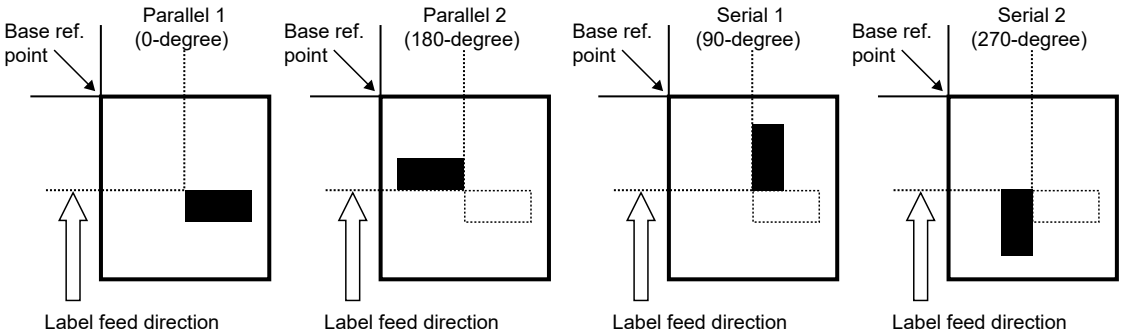

[Valid Commands]

Font	<XU>	<XS>	<XM>	<XB>	<XL>	<OA>	<OB>	<RD>	<$=>	<K1>
	<K2>	<K3>	<K4>	<K5>	<K8>	<K9>	<KA>	<KB>	<KD>	<k1>
	<k2>	<k3>	<k4>	<k5>	<k8>	<k9>	<kA>	<kB>	<kD>	<U>
	<S>	<M>	<WB>	<WL>	<X20>	<X21>	<X22>	<X23>	<X24>	
Barcode	<B>	<BC>	<BG>	<BI>	<D>	<D><d>	<BD>	<BT>	<BW>	<BF>
	<BL>	<BL><d>	<BM>							
2D Code	<2D10>	<BK>	<2D12>	<2D20>	<BV>	<2D30>	<2D31>	<2D32>	<BQ>	
	<2D50>	<BX>	<2D51>	<2D70>						
Composite Symbol	<EU>									
Graphic	<G>	<GM>	<GP>							
System	<E>									
Modification	<RF>	<FW>	<FC>	<FT>	< (>					
Memory Card	<GR>	<GC>	<PY>							
Calendar	<WA>*1									

*1 Optional RTC (Real Time Clock) Kit is required.

[ESC+F] Sequential Number

Hexadecimal code	ESC	F	Parameter
	<1B>$_{16}$	<46>$_{16}$	aaaabcccc(,dd,ee,f)
Initial value	None		

Valid range and term of command	When the power is OFF	The set parameter is not maintained.
	Valid range within items	The set parameter becomes invalid.
	Valid range between items	The set parameter becomes invalid.

[Function]

Specifying prior to the data specification command of font or barcode, and printing specified data in a sequential order.

[Format]

<F>aaaabcccc(,dd,ee,f)

- Parameter

  a [Print quantity specification of identical contents] = Valid range : 1 to 9999
  b [Increasing and decreasing specification]
  + : Addition
  - : Subtraction
  c [Setting of increasing and decreasing value] = Valid range : 1 to 9999
  d [Valid digit number for sequential number] = Valid range : 1 to 99 When omitted: 8 (omissible)
  e [Low-order invalid digit number] = Valid range : 0 to 99 When omitted: 0 (omissible)
  f [Specification of Decimal/Hex sequential number]
  0 : Decimal number When omitted: 0 (omissible)
  1 : Hexadecimal

[Coding Example]

Print quantity specification of identical contents: 1, Increasing and decreasing specification: +, Setting of increasing and decreasing value: 1, Valid digit number for sequential number: 5, Loworder invalid digit number: 0

<A>
<V>100<H>100<P>2<L>0202
<F>1+1,5,0<XU>10000
<Q>2
<Z>

[Supplementary Explanation]

- Sequential number can be specified up to 8 points per format.
- Next print data from <F> command will be the initial value of sequential number.
- Specify the required number of digits for sequential number to print it properly. If not specified, sequential numbers may not be printed properly.
- Specification of Black/White Reverse Print <(> is not valid for sequential numbered data.
- Auto Linefeed <E> is not available.
- Need to print font or barcode to print sequential number.

- Digit number of sequential number should correspond to that of font/barcode data command. If the digit number of sequential number is larger, sequential number printing will not be performed.
- If the print data immediately after the Sequential Number <F> becomes the sequential number invalid command, the sequential number will be invalid.

[Valid Commands]

Font	<XU>	<XS>	<XM>	<XB>	<XL>	<OA>	<OB>	<RD>	<$=>	<U>
	<S>	<M>	<WB>	<WL>	<J>	<X20>	<X21>	<X22>	<X23>	<X24>
Barcode	<B>	<BC>	<BG>	<BI>	<D>	<D><d>	<BD>	<BT>	<BW>	<BP>
	<BF>	<BL>	<BL><d>	<BM>						
2D Code	<2D50>	<2D51>								

[ESC+FW] Ruled / Grid Line Print

Hexadecimal code	ESC	<FW>	Parameter
	<1B>$_{16}$	<46>$_{16}$<57>$_{16}$	Rule aabccccc Grid aabbVcccccHddddd
Initial value	None		

Valid range and term of command	When the power is OFF	The set parameter is not maintained.
	Valid range within items	The set parameter becomes invalid.
	Valid range between items	The set parameter becomes invalid.

[Function]

Specifying the ruled / grid line.

[Format]

<FW>aabccccc : Print of ruled line

- Parameter

  a [Line width] = Valid range : 02 to 99 dots
  b [Horizontal/vertical direction]
  H : Horizontal direction
  V : Vertical direction
  c [Ruled line length] = Valid range : Refer to [Valid Range] section below.

<FW>aabbVcccccHddddd : Print of grid line

- Parameter

  a [Vertical line width] = Valid range : 02 to 99 dots
  b [Horizontal line width] = Valid range : 02 to 99 dots
  c [Vertical line length] = Valid range : Refer to [Valid Range] section below.
  d [Horizontal line length] = Valid range : Refer to [Valid Range] section below.

[Coding Example 1]

Ruled line print, Line width: 4, Horizontal direction, Ruled line length: 400

Grid line print, Vertical line width: 8, Horizontal line width: 8, Vertical line length: 300, Horizontal line length: 400

<A>
<V>100<H>200**<FW>04H400**
<V>300<H>200**<FW>0808V300H400**
<Q>2
<Z>

[Supplementary Explanation]

- When the print start position exceeds the printing area, the printing is not performed. (This will not be a command error.)
- Set line width according to the table below so the horizontal line width is more than 0.166 mm.

Head density	Line width
203 dpi (8 dots/mm)	2 dots or more
305 dpi (12 dots/mm)	2 dots or more

Head density	Line width
609 dpi (24 dots/mm)	4 dots or more

- If setting the vertical line width wider, it will be widened to the right side against media feed direction. If setting the horizontal line width wider, it will be widened to the lower side against media feed direction.
- If setting the grid line wider, it will be widened inward.

[Valid Range]

Head density	Valid range: Horizontal (dots)	Valid range: Vertical (dots)
203 dpi	1 to 832	1 to 20000
305 dpi	1 to 1248	1 to 18000
609 dpi	1 to 2496	1 to 9600

[ESC+FC] Print Circle

Hexadecimal code	ESC	FC	Parameter
	<1B>$_{16}$	<46>$_{16}$<43>$_{16}$	,aaa,bbb(,c,d)
Initial value	None		

Valid range and term of command	When the power is OFF	The set parameter is not maintained.
	Valid range within items	The set parameter becomes invalid.
	Valid range between items	The set parameter becomes invalid.

[Function]

Specifying the print of circle.

[Format]

<FC>,aaa,bbb(,c,d)

- Parameter

  a [Radius] = Valid range : 5 to 999 dots
  b [Line width] = Valid range : 1 to 999 dots
  c [Sectional number] = Valid range : 0 to 8 When omitted: 0 (omissible)
  *See the details listed below.
  d [Pattern] = Valid range : 0 to 3 When omitted: 0 (omissible)
  0 : Solid line (black)
  1 : Gray 1
  2 : Gray 2
  3 : Gray 3

- Sectional number

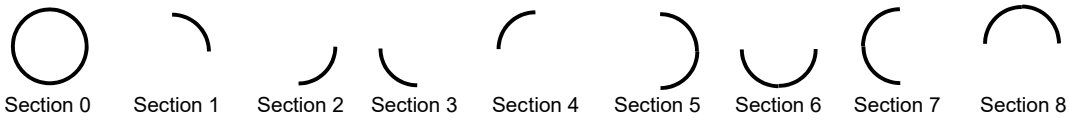

[Coding Example]

Solid line circle of 100 dots in radius, 8 dots in line width

```
<A>
<V>200<H>200
<FC>,100,8,0,0
<Q>1
<Z>
```

[Supplementary Explanation]

- When the value outside of the range is specified for sectional number, it will be processed as "0." (This will not be a command error.)
- When the value outside of the range is specified for the designation of pattern, it will be processed as "0." (This will not be a command error.)
- Even when the print start position exceeds the printing area, the printing is performed. (This will be a command error.)
- This command sets the base reference point to the center of a circle.

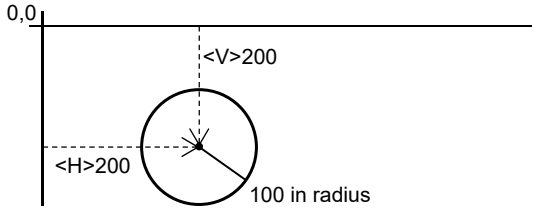

- This command can be registered to the format.
- If setting the grid line wider, it will be widened inward.

[ESC+FT] Print Triangle

Hexadecimal code	ESC	FT	Parameter
	<1B>$_{16}$	<46>$_{16}$<54>$_{16}$	,aaaa,bbbb(,cccc,d)
Initial value	None		

Valid range and term of command	When the power is OFF	The set parameter is not maintained.
	Valid range within items	The set parameter becomes invalid.
	Valid range between items	The set parameter becomes invalid.

[Function]

Specifying the print of triangle.

[Format]

<FT>,aaaa,bbbb(,cccc,d)

- Parameter

  a [Length of sides] = Valid range : 10 to 2000 dots
  b [Line width] = Valid range : 1 to 1000 dots
  c [Length of base] = Valid range : 10 to 2000 dots (omissible)
  When omitted, its value will be equal to the length of sides.
  d [Pattern] = Valid range : 0 to 3 When omitted: 0 (omissible)
  0 : Solid line (black)
  1 : Gray 1
  2 : Gray 2
  3 : Gray 3

[Coding Example]

Length of sides: 100 dots, Line width: 8 dots, Length of base: 100 dots

<A>
<V>100<H>200
<FT>,100,8,100,0
<Q>1
<Z>

[Supplementary Explanation]

- When the value outside of the range is specified for pattern, it will be processed as "0." (This will not be a command error.)
- When the print start position exceeds the printing area, the printing is performed. (This will be a command error.)

  (When the print start position exceeds the printing area in the vertical direction, the label will be fed.)
- When the side length is not equal to the base length, printing will not be performed due to command error.
- This command sets the base reference point to the apex of a triangle.

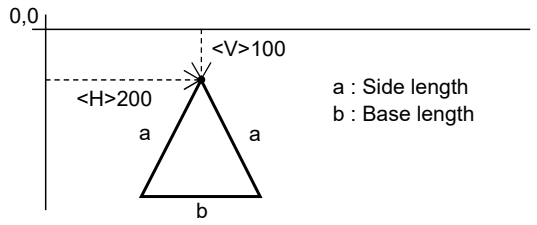

- This command can be registered to the format.
- If setting the line wider, it will be widened inward.
- If the base length is odd number, +1 will be added automatically to make even number.

[ESC+(] Reverse Color Print

Hexadecimal code	ESC	(	Parameter
	<1B>$_{16}$	<28>$_{16}$	aaaa,bbbbb
Initial value	None		

Valid range and term of command	When the power is OFF	The set parameter is not maintained.
	Valid range within items	The set parameter becomes invalid.
	Valid range between items	The set parameter becomes invalid.

[Function]

Specifying black and white reverse print.

[Format]

<(>aaaa,bbbbb

- Parameter

  a [Specification of reverse area in horizontal direction]
  Valid range: Refer to [Valid Range] section below.
  b [Specification of reverse area in vertical direction]
  Valid range: Refer to [Valid Range] section below.

[Coding Example]

Reverse area in horizontal direction: 200, Reverse area in vertical direction: 70

<A>
<V>50<H>50<P>2<L>0202<XM>ABC
<V>50<H>50**<(>200,70**
<Q>2
<Z>

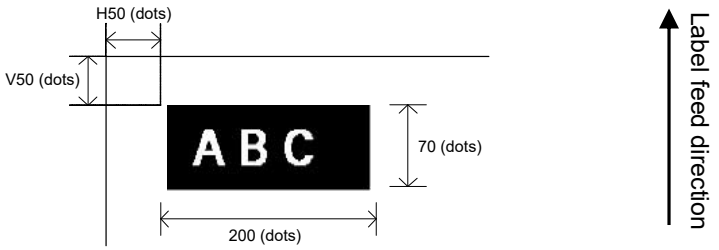

[Supplementary Explanation]

- Set this command next after the firm data string to be inversed. If it is set prior to the firm data the data will be printed in black without inverse.
- To set print start position, specify Horizontal Print Position <H> and Vertical Print Position <V> prior to this command.
- When the print start position exceeds the printing area, printing will not be performed due to command error.

[Points]

- For setting, keep the black print area under 30% of overall label.

[Valid Range]

Head density	Valid range: Area in horizontal direction (dots)	Valid range: Area in vertical direction (dots)
203 dpi	8 to 832	8 to 20000
305 dpi	8 to 1248	8 to 18000
609 dpi	8 to 2496	8 to 9600

[ESC+KC] Kanji Code

Hexadecimal code	ESC	KC	Parameter
	<1B>$_{16}$	<4B>$_{16}$<43>$_{16}$	a
Initial value	a=5		

Valid range and term of command	When the power is OFF	The set parameter is not maintained.
	Valid range within items	The set parameter is valid until the next specification is made.
	Valid range between items	The set parameter becomes initial value at the next item <A>.

[Function]

Specifying Kanji Code.

This command allows temporary switch-over between Kanji codes. Normally it is specified by “Settings” mode of this product.

[Format]

<KC>a

- Parameter

a [Kanji code]
0 : JIS code
1 : Shift JIS code
2 : Unicode (UTF-16)
3 : Unicode (UTF-8)
4 : BIG5 code
5 : GB18030 code
6 : KSC5601(EUC-KR) code

[Coding Example 1] For Kanji set (<KS>)＝JISX208 Kanji, Shift JIS

<A>
<KS>1
<KC>1
<V>100<H>200<P>2<L>0202
<K1>H81698A94816A83548367815B
<Q>2
<Z>

[Coding Example 2] For Kanji set (<KS>)＝Compatible Kanji (JISX208),JIS

<A>
<KS>0
<KC>0
<V>100<H>200<P>2<L>0202
<K1>H214A3374214B25352548213C
<Q>2
<Z>

[Coding Example 3] For Kanji set (<KS>)＝JISX213 Kanji, Unicode (UTF-16)

<A>
<KS>2
<KC>2

<V>100<H>200<P>2<L>0202
<K1>HFF08682AFF0930B530C830FC
<Q>2
<Z>

[Supplementary Explanation]

- There is no necessity to specify this command in the normal label printing.
- To set Shift JIS as initial value, use settings mode of this product.
- It is possible to specify multiple Kanji codes within 1 item.
- Please use the appropriate Kanji code according to the Kanji set specified in Kanji Set <KS>.
- When the Kanji set is changed, specify this command after Kanji Set <KS>.

[Parameter valid range]

Kanji Set <KS>	Kanji Code <KC> valid range
Japanese Compatible Kanji (JISX208) Japanese JIS208 Kanji (JISX208)	0: JIS code 1: Shift JIS code 2: Unicode (UTF-16) 3: Unicode (UTF-8)
Japanese JIS213 Kanji (JISX213)	1: Shift JIS code 2: Unicode (UTF-16) 3: Unicode (UTF-8)
Chinese Simplified (GB18030)	3: Unicode (UTF-8) 5: GB18030 code
Chinese Traditional (BIG5)	3: Unicode (UTF-8) 4: BIG5 code
Korean (KSC5601)	3: Unicode (UTF-8) 6: KSC5601 (EUC-KR) code

[ESC+&] Store Form Overlay

Hexadecimal code	ESC	&	Parameter
	<1B>$_{16}$	<26>$_{16}$	(aab...b)
Initial value	None		

Valid range and term of command	When the power is OFF	The set command is not maintained.
	Valid range within items	The set command is valid until the next specification is made.
	Valid range between items;	The set command is valid until the next specification is made.

[Function]

Specifying the registration of form overlay.

[Format]

<&>(aab...b)

- Parameter

  a [Registration key] = Valid range : 01 to 99 (omissible)
  b [Comment] = Max. 16 bytes (omissible)

[Coding Example]

```
<A>
<V>100<H>50<FW>1010V800H750
<V>100<H>50<FW>0505V760H710
<V>150<H>100<XB>0MODEL
<&>01DATA1
<Z>
```

[Supplementary Explanation]

- This command saves fixed print contents to the printer and then, Recall Form Overlay </> combines the contents with drawing of general data to print out.
- Specify this command at the end of data string that is to be stored. Drawing valid range in form overlay registration is same as printing area.
- This command can register only one format. Use any code from 01 to 99 as a registration key.
- To change contents, specify Clear Form Overlay (<*>&), and then register new storage data.
- Invoke registered contents by Recall Form Overlay </>.
- When specifying Media Size <A1>, it will be extracted in the specified area.

[Valid Commands]

Print Position	<V>	<H>								
Font	<XU>	<XS>	<XM>	<XB>	<XL>	<OA>	<OB>	<RD>	<$=>	<K1>
	<K2>	<K3>	<K4>	<K5>	<K8>	<K9>	<KA>	<KB>	<KD>	<k1>
	<k2>	<k3>	<k4>	<k5>	<k8>	<k9>	<kA>	<kB>	<kD>	<U>
	<S>	<M>	<WB>	<WL>	<X20>	<X21>	<X22>	<X23>	<X24>	
Barcode	<B>	<BC>	<BG>	<BI>	<D>	<D><d>	<BD>	<BT>	<BW>	<BP>
	<BF>	<BL>	<BL><d>	<BM>						
2D Code	<2D10>	<BK>	<2D12>	<2D20>	<BV>	<2D30>	<2D31>	<2D32>	<BQ>	
	<2D50>	<BX>	<2D51>	<2D70>						
Composite Symbol	<EU>									
Modification	<WD>	<FW>	<(>	<RF>	<RM>					
Graphic	<G>	<GM>	<GP>							

[ESC+/] Recall Form Overlay

Hexadecimal code	ESC	/	Parameter
	<1B>$_{16}$	<2F>$_{16}$	(aa)
Initial value	None		

Valid range and term of command	When the power is OFF	The set command is not maintained.
	Valid range within items	The set command is valid until the next specification is made.
	Valid range between items	The set command is valid until the next specification is made.

[Function]

Recalling form overlay.

[Format]

</>(aa)

- Parameter

  a [Registration key] = Valid Range : 01 to 99 (omissible)

[Coding Example]

```
<A>
</>01
<V>200<H>100<P>0<$>B,100,100,6
<$=>SATOPRINTER
<V>720<H>150<B>102100*95000012345*
<Q>2
<Z>
```

[Supplementary Explanation]

- This command invokes the contents registered by Store Form Overlay <&> to print.
- When detecting this command in normal print data, it will be combined with drawing stored in form overlay and printed.
- The registration key is not checked, so that specifying wrong registration key does not raise an error.

[ESC+0] Partial Edit

Hexadecimal code	ESC	0	Parameter
	<1B>$_{16}$	<30>$_{16}$	None
Initial value	None		

Valid range and term of command	When the power is OFF	The set command is not maintained.
	Valid range within items	The set command becomes invalid.
	Valid range between items	The set command becomes invalid.

[Function]

Editing the portion in the previous print data.

[Format]

<0>

[Coding Example]

[DEF], a part of print data, is changed to [123].

First label

```
<A>
<V>100<H>200<P>2<L>0202<XM>ABC
<V>200<H>200<P>2<L>0202<XM>DEF
<Q>1
<Z>
```

Second label

```
<A>
<0>
<V>200<H>200<P>2<L>0202<XM>123
<Q>1
<Z>
```

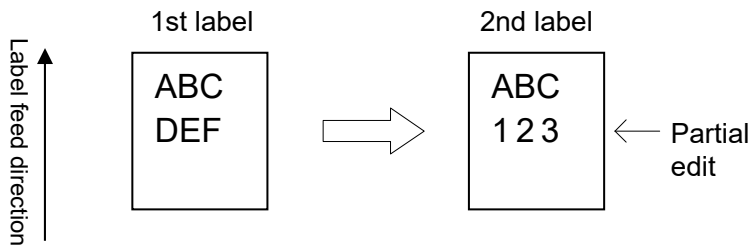

[Supplementary Explanation]

- Use this command to edit only one part of previous print data.
- Invoke the previous print data with this command to edit and print out. In this case, specify the part of previous data to edit, and send change data to it.
- Specified portion in the previous data will be cleared.
- If Rotation <%> is included in the specified editing portion, keep it for partial editing.
- Use this command with fixed pitch, same font or same digit number.

[ESC+WD] Partial Copy

Hexadecimal code	ESC	WD	Parameter
	<1B>$_{16}$	<57>$_{16}$<44>$_{16}$	VaaaaaHbbbbYcccccXdddd
Initial value	None		

Valid range and term of command	When the power is OFF	The set parameter is not maintained.
	Valid range within items	The set parameter becomes invalid.
	Valid range between items	The set parameter becomes invalid.

[Function]

Copying specified area to another place.

[Format]

<WD>VaaaaaHbbbbYcccccXdddd

- Parameter

  a [Vertical start point of original data] = Valid range: Refer to [Valid Range] section below.
  b [Horizontal start point of original data] = Valid range: Refer to [Valid Range] section below.
  c [Vertical dot size of original data] = Valid range: Refer to [Valid Range] section below.
  d [Horizontal dot size of original data] = Valid range: Refer to [Valid Range] section below.

[Coding Example]

Vertical start point of original data: 50, Horizontal start point of original data: 50,

Vertical dot size of original data: 200, Horizontal dot size of original data: 400

<A>
<V>50<H>50<P>2<L>0202<XU>ABCD
<V>300<H>100**<WD>V50H50Y200X400**
<Q>2
<Z>

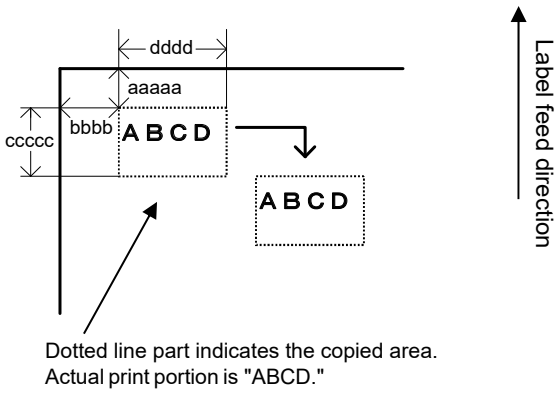

[Supplementary Explanation]

- To locate the destination of copy, specify Vertical Print Position <V> and Horizontal Print Position <H> prior to this command.
- Destination of copy has to be outside of specified original data.
- When the location of the copied area defined by Vertical Print Position <V> and Horizontal Print Position <H> is outside of printing area, printing will not be performed due to command error.

[Valid Range]

Head density	Valid range: Horizontal start point of original data	Valid range: Vertical start point of original data
	Horizontal dot size of original data (dots)	Vertical dot size of original data (dots)
203 dpi	1 to 832	1 to 20000
305 dpi	1 to 1248	1 to 18000
609 dpi	1 to 2496	1 to 9600

[ESC+J] Journal Print

Hexadecimal code	ESC	J	Parameter
	<1B>$_{16}$	<4A>$_{16}$	a...a+CR<0D>$_{16}$
Initial value	None		

Valid range and term of command	When the power is OFF	The set parameter is not maintained.
	Valid range within items	The set parameter becomes invalid.
	Valid range between items	The set parameter becomes invalid.

[Function]

Specifying the print of journal.

[Format]

<J>a...a+CR

- Parameter

  a [Journal print column] = Print data
  CR [Control code (0DH)]

[Coding Example]

<A>
<J>
ABCD+CR
EFGH+CR
<Z>

[Supplementary Explanation]

- This command starts journal print from vertical position of 2 dots and horizontal position of 2 dots.
- Character pitch is set to 2 dots and line pitch is set to 16 dots.
- This command prints in 2 x 2 times of S font.
- Use of this command in combination with other commands is invalid. But, only Reprint <C> and Reverse Color Print <(> are available.
- This command performs the line feed regardless of setting of CR/LF deletion.

[ESC+RF] Recall Font & Logo

Hexadecimal code	ESC	RF	Parameter
	<1B>$_{16}$	<52>$_{16}$<46>$_{16}$	aabbbb,n...n
Initial value	aa=01, bbbb=1		

Valid range and term of command	When the power is OFF	The set parameter is not maintained.
	Valid range within items	The set parameter becomes invalid.
	Valid range between items	The set parameter becomes invalid.

[Function]

Invoking and printing the font and logo downloaded with exclusive tool.

[Format]

<RF>aabbbb,n...n

- Parameter

  a [Font ID number] = Valid range: 01 to 99
  b [Print digit] = Valid range: 1 to 9999
  n [Print data] = data

[Coding Example 1]

To print [AB] in half size character with this command [Font ID No.: 01, Print digit: 4]

(Unicode; “A” is <0041>$_{16,}$ “B” is <0042>$_{16}$)

<A>
<PS>
<V>100<H>100<L>0101
<RF>010004,<0041>$_{16}$<0042>$_{16}$
<Z>

[Coding Example 2]

When calling and printing logo [Font ID No.: 02 Print digit: 2]

<A>
<V>100<H>100<L>0101**<RF>020002,<826B>$_{16}$**
<Z>

[Supplementary Explanation]

- Specify the value of print data putting Unicode(UTF-16BE).
- When calling and printing logo, specify [Print digit: 0002], [Print data: <826B>$_{16}$].
- For [Print Data] parameter, the byte order changes depending on compatibility settings for Font/Logo call.
  - Specify little endian when compatibility settings are enabled.

    e.g.) Specify <4100> for character "A."
  - Specify big endian when compatibility settings are disabled.

    e.g.) Specify <0041> for character "A."

[ESC+RM] Mirror Image

Hexadecimal code	ESC	RM	Parameter
	<1B>$_{16}$	<52>$_{16}$<4D>$_{16}$	aaaa,bbbbb
Initial value	None		

Valid range and term of command	When the power is OFF	The set parameter is not maintained.
	Valid range within items	The set parameter becomes invalid.
	Valid range between items	The set parameter becomes invalid.

[Function]

Performing mirror rotation of print data.

[Format]

<RM>aaaa,bbbbb

- Parameter

  a [Horizontal range of mirror rotation specification]
  Valid range: Refer to [Valid Range for start position of mirroring] and [Valid Range for mirror rotation] section below.
  b [Vertical range of mirror rotation specification]
  Valid range: Refer to [Valid Range for start position of mirroring] and [Valid Range for mirror rotation] section below.

[Coding Example 1]

When the range of mirror rotation is specified:

<A>
<H>100<V>200<XS>12345
<H>100<V>200**<RM>0200,0080**
<Q>1
<Z>

[Coding Example 2]

When the range of mirror rotation is not specified:

<A>
<H>100<V>200<XS>12345
<RM>
<Z>

[Supplementary Explanation]

- When the parameter "aaaa" and "bbbbb" are not specified, all print data specified prior to this command will be rotated.
- Data outside of printing area will not rotate.
- If specifying this command for the item that does not contain print data, the command error will occur.
- This command cannot be used in combination with the commands that associated with reedition of print data. Refer to the invalid commands list below. When the command that cannot use in combination with is specified, print result is not guaranteed.
- This command cannot be used in combination with some registration commands. Refer to the invalid commands list below. When the command that cannot use in combination with is specified, print result is not guaranteed.
- This command cannot be used in combination with some of the modification commands. Refer to the invalid commands list below. When the command that cannot use in combination with is specified, print result is not guaranteed.
- This command prints the mirror image of the print data put before the mirror rotation command is specified. The data after the command does not rotate. Note that specifying this command several times results rotating the data several times.
- When the mirror image is applied for the barcode, reading of the barcode and the head damage check are not guaranteed.
- When executing the mirror image, the head damage check will be performed for all the areas where rotated.

[Valid Range for start position of mirroring]

Head density	Valid range (dots)	
	Horizontal range of mirror rotation specification	Vertical range of mirror rotation specification
203 dpi	1 to 832	1 to 20000
305 dpi	1 to 1248	1 to 18000
609 dpi	1 to 2498	1 to 9600

[Valid Range for mirror rotation]

Head density	Valid range (dots)	
	Horizontal range of mirror rotation	Vertical range of mirror rotation
203 dpi	8 to 832	8 to 20000
305 dpi	8 to 1248	8 to 18000
609 dpi	8 to 2498	8 to 9600

[Invalid Commands]

Command that associated with reediting.	<WD>	<F>	<(>	<0>	<WA>					
Registration	<GI>	<GT>	<PI>							
Modification	<%>									

[ESC+KS] Kanji Set

Hexadecimal code	ESC	KS	Parameter
	<1B>$_{16}$	<4B>$_{16}$<53>$_{16}$	a
Initial value	a=3		

Valid range and term of command	When the power is OFF	The set parameter is maintained.
	Valid range within items	The set parameter is valid until the next specification is made.
	Valid range between items	The set parameter is valid until the next specification is made.

[Function]

Specifying Kanji set.

[Format]

<KS>a

- Parameter

  a [Kanji Set] = Refer to [Initial Value and Valid Rangef of Parameter] section blow.

[Coding Example]

Specifying GB18030

<A>
<KS>3
<Z>

[Supplementary Explanation]

- Select the kanji set to be printed by using 16 x 16 dots horizontal writing kanji <K1> command, 24 x 24 dots horizontal writing <K2> command, 16 x 16 dots vertical writing kanji <k1> command and 24 x 24 dots vertical dots <k2> command.
- An appropriate Kanji code should be specified when switching the Kanji Set. If the right code is not specified, the print may fail. Refer to Kanji Code <KC>.

[Initial Value and Valid Range of Parameter]

Initial value	Valid range
3	0: Japanese, Compatible Kanji (JISX208) 1: Japanese, JIS208 Kanji (JISX208) 2: Japanese, JIS213 Kanji (JISX213) 3: Chinese, Simplified Chinese characters (GB18030) 4: Reserved 5: Chinese, Traditional Chinese characters (BIG5) 6: Korean (KSX1001)

[ESC+AL] Field alignment

Hexadecimal code	ESC	AL	Parameter
	<1B>$_{16}$	<41>$_{16}$<4C>$_{16}$	a
Initial value	a=1		

Valid range and term of command	When the power is OFF	The set parameter is not maintained.
	Valid range within items	The set command is valid until the next specification is made.
	Valid range between items;	The set parameter becomes initial value at the next item <A>.

[Function]

The base reference point specified with print positioning commands <H>, <V> is equal to the "Alignment position" of this command. The field's base reference points are changeable with "Alignment position." The supported fields are follows; All text fields, barcode, 2D barcode, graphics, ruled lines and boxes etc.

[Format]

<AL>a

- Parameter

a Alignment position
1: Top left
2: Top center
3: Top right
4: Middle left
5: Middle center
6: Middle right
7: Bottom left
8: Bottom center
9: Bottom right

[Field and alignment positions (for font command)]

The number inside the circle indicate the value of parameter a, "Alignment position (the positions specified with print positioning commands <H>, <V>."

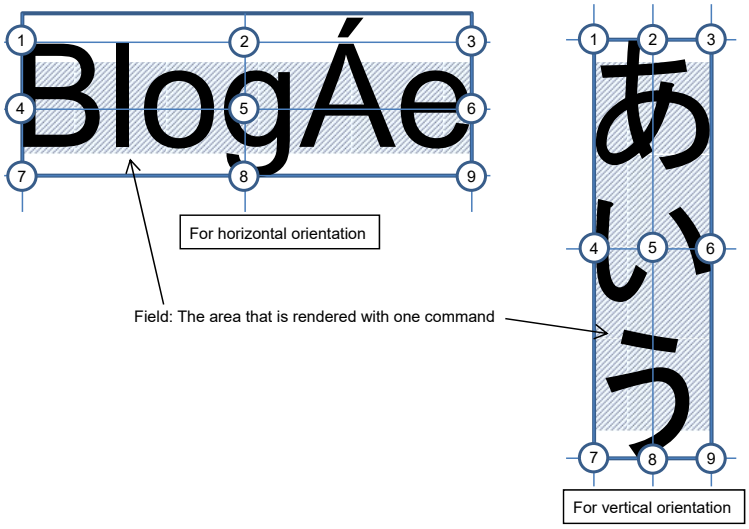

[Coding example]

Font's alignment position: Top Right, barcode alignment position: Bottom left

```
<A>
<AL>3
<V>100<H>700<P>3<L>0403<X22>,ABCD
<AL>7
<V>400<H>200<BD>103160*123*
<Q>2
<Z>
```

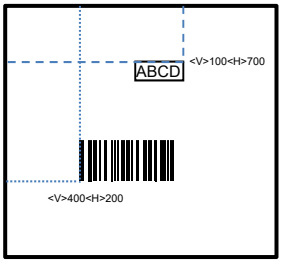

[Supplementary Explanation]

- The alignment position will ignore anything that was set, and sets the default "Top left" if the value for parameter a was 0 or a non-numeric value.
- If you select Middle or Bottom, the position may vary depending on the ascender line and descender line of each field. Ascender/descender lines depend on each font, so not all fonts may show like in the examples as below.

  E.g.) Cases with and without 'Í' and 'g'

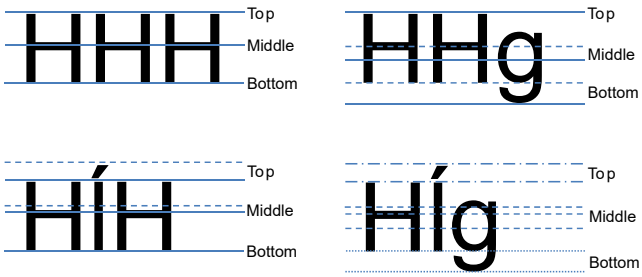

- Make sure to specify <H> and <V> to the field when you select Center and Right.

  If they are not specified when specifying for the 2nd field, the trailing edge of the 1st field becomes the base reference point of the 2nd field, which means that the parts of the 1st and 2nd field will overlap.
  E.g.) If <H> and <V> are not specified to the 2nd field when specifying Center;

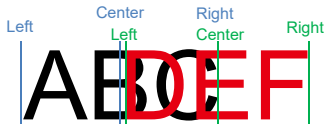

  E.g.) If <H> and <V> are not specified to the 2nd field when specifying Right;

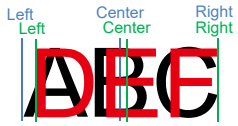

- This product does not print if the positions specified with <H> and <V> (equal to "Alignment position") if they are out of printing area.
- There are cases where the rendered field may run off from printing area depending on "Alignment position" and print position commands <H> and <V>. Command error (Position Error) may occur depending on the conditions as described below.

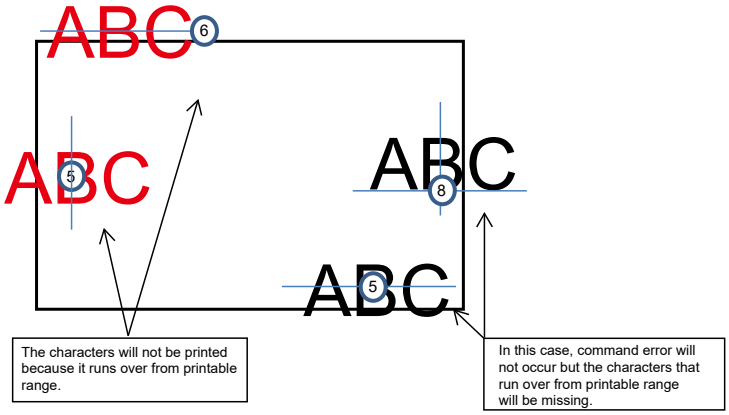

- The composition of the field depends on the command when specifying "Alignment position" for barcode and 2D code fields.

  Ex.) When specifying barcode, 2D code without automatically attached human readables

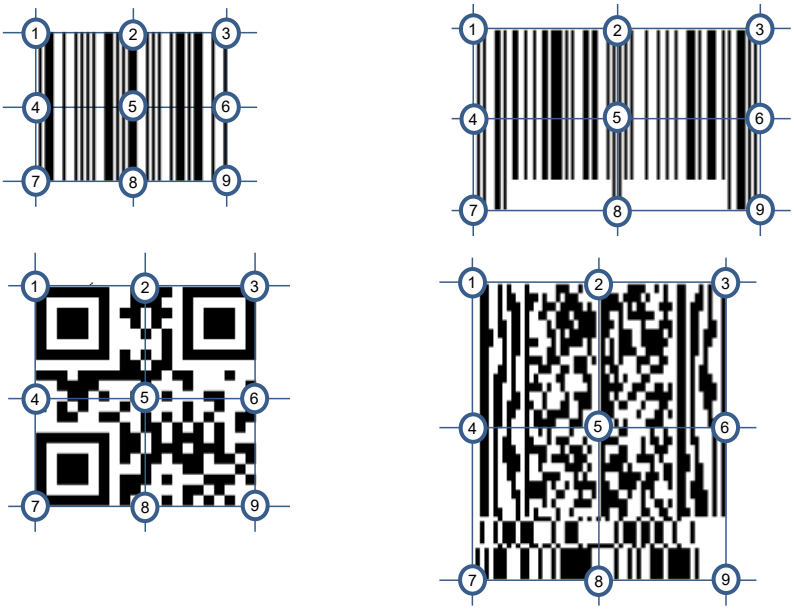

Ex.) When specifying a barcode with automatically attached human readables (<BD>,<BM> <BI> etc.)

- The left alignment position in the top, middle, and bottom differs for barcodes such as UPC-A and JAN/EAN-13 with <BD> / <BM> command since the human readable text is printed in the left of the barcode.

Notes:

- Human readables are included in the field of "Field Alignment" for barcode.
- This product works as below if the printing runs off printing area as a result of "Alignment position."
  - Position Error will occur and will not print if the top left of the barcode runs off.
  - International models will print if the Top Left of the barcode does not run off the paper. However some parts of the barcode will be missing.
  - Barcodes will be printed if human readables run off the Left of the paper. However the human readables will not be printed.

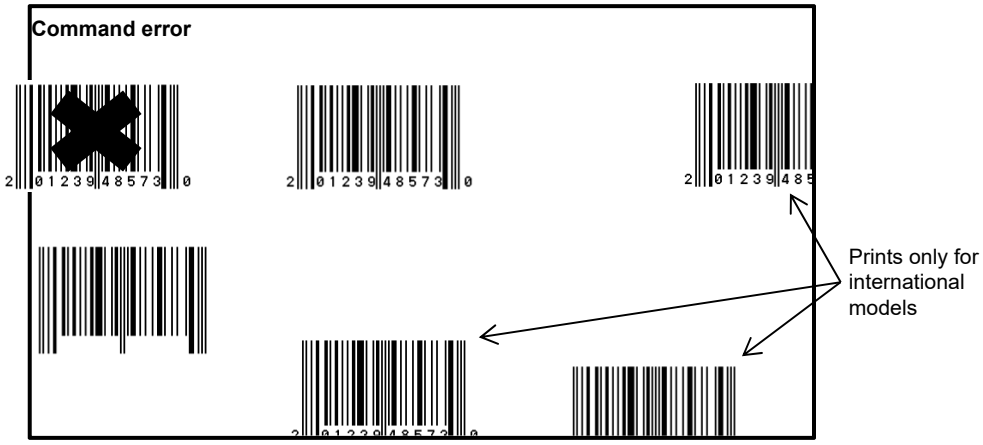
Command error
Prints only for international models

[Valid Commands]

Font	<XU>	<XS>	<XM>	<XB>	<XL>	<OA>	<OB>	<U>	<S>	<M>
	<WB>	<WL>	<X20>	<X21>	<X22>	<X23>	<X24>			
	<$=>	<RD>	<RH>	<RG>						
	<K1>	<K2>	<K3>	<K4>	<K5>	<K8>	<K9>	<KA>	<KB>	<KD>
	<k1>	<k2>	<k3>	<k4>	<k5>	<k8>	<k9>	<kA>	<kB>	<kD>
	<K1> (<K2>)	<k1> (<k2>)								
Barcode	<B>	<BC>	<BG>	<BI>	<D>	<D><d>*1	<BD>	<BW>	<BP>	<BM>
	<BF>*2	<BS>*3	<BL>	<BL><d>*1						
2D Code	<2D10>	<2D12>	<2D20>	<2D30>	<2D31>	<2D32>	<2D50>	<2D51>		
	<BX>	<BK>	<BV>	<BQ>	<FX>					
Composite Symbol	<EU>									
Graphic	<G>	<GM>	<GP>							
System	<E>									
Modification	<FW>	<F>	<%>	<RF>	<L>	<P>	<PS>	<PR>		
Memory Card	<GR>	<GC>	<PY>	<BJT>						
Calendar	<WA>*4									

*1 The position depends on the specified human readable type and data. Make sure to specify just the right number of characters for human readables data. Printing is not guaranteed if there are excess or insufficient human readables.

*2 <BF>: Bookland is a barcode which uses multiple commands such as <BD> and <BF>, <D>～<d> and <BF>. Please arrange so that they are printed in expected positions since alignment positions are calculated by each field for this command.

*3 <BS>: USPS Barcode has the same position as specifying Middle position in this command without specifying this command. When you specify Middle position with this command, it prints to an alignment position equivalent to Bottom position.

Example) Top left

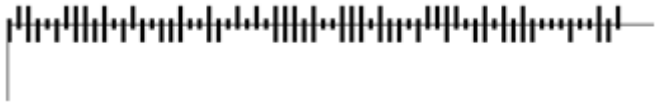

Example) Middle left

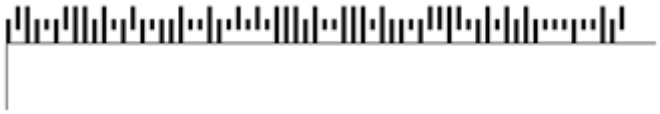

Example) Bottom left

*4 This command requires optional calendar IC.

Font commands

[ESC+X20] X20 Font (Basic size 5 x 9 dots)

Hexadecimal code	ESC	X20	Parameter
	<1B>$_{16}$	<58>$_{16}$<32>$_{16}$<30>$_{16}$	,n...n
Initial value	None		

Valid range and term of command	When the power is OFF	The set parameter is not maintained.
	Valid range within items	The set parameter becomes invalid.
	Valid range between items	The set parameter becomes invalid.

[Function]

Font with the basic size of W5 x H9 dots is specified.

[Format]

<X20>,n...n

- Parameter

  n [Print data] = Data

[Coding Example]

<A>
<V>100<H>200<P>2<L>0304**<X20>,ABCDE**
<Q>2
<Z>

[Supplementary Explanation]

- X20 font only allows the setting of a fixed pitch.

[Valid Commands]

Print Position	<V>	<H>								
Modification	<P>	<L>	<%>	<F>	<&>	</>	<0>	<WD>		
Barcode	<D><d>	<BL><d>								
Calendar	<WA>*1									

*1 This command requires optional RTC (Real Time Clock) Kit.

X20 font character set

Basic size is 5 x 9 dots (width x height)

X20 FONT(L0303) 203DPI

	2	3	4	5	6	7	8	9	A	B	C	D	E	F
0		0	@	P		p				ー	タ	ミ		
1	!	1	A	Q	a	q				ア	チ	ム		
2	"	2	B	R	b	r				イ	ツ	メ		
3	#	3	C	S	c	s				ウ	テ	モ		
4	$	4	D	T	d	t				エ	ト	ヤ		
5	%	5	E	U	e	u			・	オ	ナ	ユ		
6	&	6	F	V	f	v			ヲ	カ	ニ	ヨ		
7	'	7	G	W	g	w				キ	ヌ	ラ		
8	(	8	H	X	h	x				ク	ネ	リ		
9	)	9	I	Y	i	y				ケ	ノ	ル		
A	*	:	J	Z	j	z				コ	ハ	レ		
B	+	;	K	¢	k	-				サ	ヒ	ロ		
C	,	<	L	¥	l	‐				シ	フ	ワ		
D	-	=	M		m	|				ス	ヘ	ン		
E	.	>	N		n	‖				セ	ホ	゛		
F	/	?	O		o					ソ	マ	゜		

The print sample shown above is issued with a head density of 8 dots/mm and an enlargement ratio of 3 (vertical/horizontal).

00H to 1FH are control code and not available.

[ESC+X21] X21 Font (Basic size 17 x 17 dots)

Hexadecimal code	ESC	X21	Parameter
	<1B>$_{16}$	<58>$_{16}$<32>$_{16}$<31>$_{16}$	,n...n
Initial value	None		

Valid range and term of command	When the power is OFF	The set parameter is not maintained.
	Valid range within items	The set parameter becomes invalid.
	Valid range between items	The set parameter becomes invalid.

[Function]

Font with the basic size of W17 x H17 dots is specified.

[Format]

<X21>,n...n

- Parameter

  n [Print data] = Data

[Coding Example]

<A>
<V>100<H>200<P>2<L>0304**<X21>,ABCDE**
<Q>2
<Z>

[Supplementary Explanation]

- X21 Font allows the selection of fixed pitch and proportional pitch.
- Setting of fixed pitch and proportional pitch can be configured with command or "Settings mode" of this product.

[Valid Commands]

Print Position	<V>	<H>								
Modification	<P>	<L>	<%>	<PS>	<PR>	<F>	<&>	</>	<0>	<WD>
Barcode	<D><d>	<BL><d>								
Calendar	<WA>*1									

*1 This command requires optional RTC (Real Time Clock) Kit.

X21 font character set

Basic size is 17 x 17 dots (width x height)

X21 FONT(L0202) 203DPI

	2	3	4	5	6	7	8	9	A	B	C	D	E	F
0		0	@	P	'	p				ー	タ	ミ		
1	!	1	A	Q	a	q			。	ア	チ	ム		
2	"	2	B	R	b	r			「	イ	ツ	メ		
3	#	3	C	S	c	s			」	ウ	テ	モ		
4	$	4	D	T	d	t			、	エ	ト	ヤ		
5	%	5	E	U	e	u			・	オ	ナ	ユ		
6	&	6	F	V	f	v			ヲ	カ	ニ	ヨ		
7	'	7	G	W	g	w			ァ	キ	ヌ	ラ		
8	(	8	H	X	h	x			ィ	ク	ネ	リ		
9	)	9	I	Y	i	y			ゥ	ケ	ノ	ル		
A	*	:	J	Z	j	z			ェ	コ	ハ	レ		
B	+	;	K	[	k	{			ォ	サ	ヒ	ロ		
C	,	<	L	¥	l	¦			ャ	シ	フ	ワ		
D	−	=	M	]	m	}			ュ	ス	ヘ	ン		
E	.	>	N	^	n	~			ョ	セ	ホ	゛		
F	/	?	O	_	o				ッ	ソ	マ	゜		

The print sample shown above is issued with a head density of 8 dots/mm and an enlargement ratio of 2 (vertical/horizontal).

00H to 1FH are control code and not available.

[ESC+X22] X22 Font (Basic size 24 x 24 dots)

Hexadecimal code	ESC	X22	Parameter
	<1B>$_{16}$	<58>$_{16}$<32>$_{16}$<32>$_{16}$	,n...n
Initial value	None		

Valid range and term of command	When the power is OFF	The set parameter is not maintained.
	Valid range within items	The set parameter becomes invalid.
	Valid range between items	The set parameter becomes invalid.

[Function]

Font with the basic size of W24x H24 dots is specified.

[Format]

<X22>,n...n

- Parameter

  n [Print data] = Data

[Coding Example]

```
<A>
<V>100<H>200<P>2<L>0304<X22>,ABCDE
<Q>2
<Z>
```

[Supplementary Explanation]

- X22 Font allows the selection of fixed pitch and proportional pitch.
- Setting of fixed pitch and proportional pitch can be configured with command or "Settings mode" of this product.

[Valid Commands]

Print Position	<V>	<H>								
Modification	<P>	<L>	<%>	<PS>	<PR>	<F>	<&>	</>	<0>	<WD>
Barcode	<D><d>	<BL><d>								
Calendar	<WA>*1									

*1 This command requires optional RTC (Real Time Clock) Kit.

X22 font character set

Basic size is 24 x 24 dots (width x height)

X22 FONT(L0202) 203DPI

	2	3	4	5	6	7	8	9	A	B	C	D	E	F
0		0	@	P	`	p				ー	タ	ミ		
1	!	1	A	Q	a	q			。	ア	チ	ム		
2	”	2	B	R	b	r			「	イ	ツ	メ		
3	#	3	C	S	c	s			」	ウ	テ	モ		
4	$	4	D	T	d	t			、	エ	ト	ヤ		
5	%	5	E	U	e	u			・	オ	ナ	ユ		
6	&	6	F	V	f	v			ヲ	カ	ニ	ヨ		
7	’	7	G	W	g	w			ァ	キ	ヌ	ラ		
8	(	8	H	X	h	x			ィ	ク	ネ	リ		
9	)	9	I	Y	i	y			ゥ	ケ	ノ	ル		
A	*	:	J	Z	j	z			ェ	コ	ハ	レ		
B	+	;	K	[	k	{			ォ	サ	ヒ	ロ		
C	,	<	L	¥	l	¦			ャ	シ	フ	ワ		
D	−	=	M	]	m	}			ュ	ス	ヘ	ン		
E	.	>	N	^	n	~			ョ	セ	ホ	゛		
F	/	?	O	_	o				ッ	ソ	マ	゜		

The print sample shown above is issued with a head density of 8 dots/mm and an enlargement ratio of 2 (vertical/horizontal).

00H to 1FH are control code and not available.

[ESC+X23] X23 Font (Basic size 48 x 48 dots)

Hexadecimal code	ESC	X23	Parameter
	<1B>$_{16}$	<58>$_{16}$<32>$_{16}$<33>$_{16}$	,an...n
Initial value	None		

Valid range and term of command	When the power is OFF	The set parameter is not maintained.
	Valid range within items	The set parameter becomes invalid.
	Valid range between items	The set parameter becomes invalid.

[Function]

Font with the basic size of W48 x H48 dots is specified.

[Format]

<X23>,an...n

- Parameter

  a [Smoothing]
  0 : Smoothing disabled
  1 : Smoothing ON (Only available if Enlargement <L> is between 3 and 12)
  n [Print data] = Data

[Coding Example]

<A>
<V>100<H>200<P>2<L>0304**<X23>,0ABCDE**
<Q>2
<Z>

[Supplementary Explanation]

- X23 Font allows the selection of fixed pitch and proportional pitch.
- Setting of fixed pitch and proportional pitch can be configured with command or "Settings mode" of this product.
- When the smoothing is enabled, and Enlargement <L> is set to 1 or 2 or from 13 to 36, the smoothing function will be ignored.

[Valid Commands]

Print Position	<V>	<H>								
Modification	<P>	<L>	<%>	<PS>	<PR>	<F>	<&>	</>	<0>	<WD>
Barcode	<D><d>	<BL><d>								
Calendar	<WA>*1									

*1 This command requires optional RTC (Real Time Clock) Kit.

X23 font character set

Basic size is 48 x 48 dots (width x height)

X23 FONT(L0101) 203DPI

	2	3	4	5	6	7	8	9	A	B	C	D	E	F
0		0	@	P	`	p				ー	タ	ミ		
1	!	1	A	Q	a	q			。	ア	チ	ム		
2	”	2	B	R	b	r			「	イ	ツ	メ		
3	#	3	C	S	c	s			」	ウ	テ	モ		
4	$	4	D	T	d	t			、	エ	ト	ヤ		
5	%	5	E	U	e	u			・	オ	ナ	ユ		
6	&	6	F	V	f	v			ヲ	カ	ニ	ヨ		
7	’	7	G	W	g	w			ァ	キ	ヌ	ラ		
8	(	8	H	X	h	x			ィ	ク	ネ	リ		
9	)	9	I	Y	i	y			ゥ	ケ	ノ	ル		
A	*	:	J	Z	j	z			ェ	コ	ハ	レ		
B	+	;	K	[	k	{			ォ	サ	ヒ	ロ		
C	,	<	L	¥	l	¦			ャ	シ	フ	ワ		
D	ー	=	M	]	m	}			ュ	ス	ヘ	ン		
E	.	>	N	^	n	~			ョ	セ	ホ	゛		
F	/	?	O	_	o				ッ	ソ	マ	゜		

The print sample shown above is issued with a head density of 8 dots/mm and an enlargement ratio of 1 (vertical/horizontal).

00H to 1FH are control code and not available.

[ESC+X24] X24 Font (Basic size 48 x 48 dots)

Hexadecimal code	ESC	X24	Parameter
	<1B>$_{16}$	<58>$_{16}$<32>$_{16}$<34>$_{16}$	,an...n
Initial value	None		

Valid range and term of command	When the power is OFF	The set parameter is not maintained.
	Valid range within items	The set parameter becomes invalid.
	Valid range between items	The set parameter becomes invalid.

[Function]

Font with the basic size of W48 x H48 dots is specified.

[Format]

<X24>,an...n

- Parameter

  a [Smoothing]
  0 : Smoothing disabled
  1 : Smoothing ON (Only available if Enlargement <L> is between 3 and 12)
  n [Print data] = Data

[Coding Example]

<A>
<V>100<H>200<P>2<L>0304**<X24>,0ABCDE**
<Q>2
<Z>

[Supplementary Explanation]

- X24 Font allows the selection of fixed pitch and proportional pitch.
- Setting of fixed pitch and proportional pitch can be configured with command or "Settings mode" of this product.
- When the smoothing is enabled, and Enlargement <L> is set to 1 or 2 or from 13 to 36, the smoothing function will be ignored.

[Valid Commands]

Print Position	<V>	<H>								
Modification	<P>	<L>	<%>	<PS>	<PR>	<F>	<&>	</>	<0>	<WD>
Barcode	<D><d>	<BL><d>								
Calendar	<WA>*1									

*1 This command requires optional RTC (Real Time Clock) Kit.

X24 font character set

Basic size is 48 x 48 dots (width x height)

X24 FONT(L0101) 203DPI

	2	3	4	5	6	7	8	9	A	B	C	D	E	F
0		0	@	P	‘	p				ー	タ	ミ		
1	!	1	A	Q	a	q			。	ア	チ	ム		
2	″	2	B	R	b	r			「	イ	ツ	メ		
3	#	3	C	S	c	s			」	ウ	テ	モ		
4	$	4	D	T	d	t			、	エ	ト	ヤ		
5	%	5	E	U	e	u			・	オ	ナ	ユ		
6	&	6	F	V	f	v			ヲ	カ	ニ	ヨ		
7	′	7	G	W	g	w			ァ	キ	ヌ	ラ		
8	(	8	H	X	h	x			ィ	ク	ネ	リ		
9	)	9	I	Y	i	y			ゥ	ケ	ノ	ル		
A	*	:	J	Z	j	z			ェ	コ	ハ	レ		
B	+	;	K	[	k	{			ォ	サ	ヒ	ロ		
C	,	<	L	¥	l	¦			ャ	シ	フ	ワ		
D	−	=	M	]	m	}			ュ	ス	ヘ	ン		
E	.	>	N	^	n	~			ョ	セ	ホ	゛		
F	／	?	O	_	o				ッ	ソ	マ	゜		

The print sample shown above is issued with a head density of 8 dots/mm and an enlargement ratio of 1 (vertical/horizontal).

00H to 1FH are control code and not available.

[ESC+XU] XU Font (Basic size 5 x 9 dots)

Hexadecimal code	ESC	XU	Parameter
	<1B>$_{16}$	<58>$_{16}$<55>$_{16}$	n...n
Initial value	None		

Valid range and term of command	When the power is OFF	The set parameter is not maintained.
	Valid range within items	The set parameter becomes invalid.
	Valid range between items	The set parameter becomes invalid.

[Function]

Font with the basic size of: W5 x H9 dots is specified.

[Format]

<XU>n...n

- Parameter

  n [Print data] = Data

[Coding Example]

```
<A>
<V>100<H>200<P>2<L>0304<XU>ABCDE
<Q>2
<Z>
```

[Supplementary Explanation]

- XU Font allows the selection of fixed pitch and proportional pitch.
- Setting of fixed pitch and proportional pitch can be configured with command or "Settings mode" of this product.
- The character set varies according to setting of European Code Page <CE>.

[Valid Commands]

Print Position	<V>	<H>								
Modification	<P>	<L>	<%>	<PS>	<PR>	<F>	<&>	</>	<0>	<WD>
Barcode	<D><d>	<BL><d>								
Calendar	<WA>*1									

*1 This command requires optional RTC (Real Time Clock) Kit.

XU font character set

Basic size is 5 x 9 dots (width x height)

XU FONT(L0303) 203DPI

	2	3	4	5	6	7	8	9	A	B	C	D	E	F
0		0	@	P	`	p	Ç	É	á	∅		ð	ó	–
1	!	1	A	Q	a	q	ü	æ	í			Ð	ß	±
2	"	2	B	R	b	r	é	Æ	ó			Ê	ô	=
3	#	3	C	S	c	s	â	ô	ú			Ë	ò	¾
4	$	4	D	T	d	t	ä	ö	ñ			È	õ	¶
5	%	5	E	U	e	u	à	ò	Ñ	Á		€	Õ	§
6	&	6	F	V	f	v	å	û	ª	Â	ã	í	µ	÷
7	'	7	G	W	g	w	ç	ù	º	À	Ã	î	Þ	,
8	(	8	H	X	h	x	ê	ÿ	¿	©		ï	þ	°
9	)	9	I	Y	i	y	ë	Ö	®				Ú	¨
A	*	:	J	Z	j	z	è	Ü	¬				Û	·
B	+	;	K	[	k	{	ï	ø	½				Ù	¹
C	,	<	L	\	l	¦	î	£	¼				ý	³
D	–	=	M	]	m	}	ì	Ø	¡	¢		¦	Ý	²
E	.	>	N	^	n	~	Ä	×	«	¥		ì	¯	
F	/	?	O	_	o	▒	Å	ƒ	»		▒		´	

The print sample shown above is issued with a head density of 8 dots/mm and an enlargement ratio of 3 (vertical/horizontal) and DOS 858.

00H to 1FH are control code and not available.

[ESC+XS] XS Font (Basic size 17 x 17 dots)

Hexadecimal code	ESC	XS	Parameter
	<1B>$_{16}$	<58>$_{16}$<53>$_{16}$	n...n
Initial value	None		

Valid range and term of command	When the power is OFF	The set parameter is not maintained.
	Valid range within items	The set parameter becomes invalid.
	Valid range between items	The set parameter becomes invalid.

[Function]

Font with the basic size of W17 x H17 dots is specified.

[Format]

<XS>n...n

- Parameter

  n [Print data] = Data

[Coding Example]

<A>
<V>100<H>200<P>2<L>0304**<XS>ABCDE**
<Q>2
<Z>

[Supplementary Explanation]

- XS Font allows the selection of fixed pitch and proportional pitch.
- Setting of fixed pitch and proportional pitch can be configured with command or "Settings mode" of this product.
- The character set varies according to setting of European Code Page <CE>.

[Valid Commands]

Print Position	<V>	<H>								
Modification	<P>	<L>	<%>	<PS>	<PR>	<F>	<&>	</>	<0>	<WD>
Barcode	<D><d>	<BL><d>								
Calendar	<WA>*1									

*1 This command requires optional RTC (Real Time Clock) Kit.

XS font character set

Basic size is 17 x 17 dots (width x height)

XS FONT(L0202) 203DPI

	2	3	4	5	6	7	8	9	A	B	C	D	E	F
0		0	@	P	'	p	Ç	É	á	0		ð	Ó	-
1	!	1	A	Q	a	q	ü	æ	í			Ð	ß	±
2	"	2	B	R	b	r	é	Æ	ó			Ê	Ô	‗
3	#	3	C	S	c	s	â	ô	ú			Ë	Ò	¾
4	$	4	D	T	d	t	ä	ö	ñ			È	õ	¶
5	%	5	E	U	e	u	à	ò	Ñ	Á		€	Õ	§
6	&	6	F	V	f	v	å	û	ª	Â	ã	Í	µ	÷
7	'	7	G	W	g	w	ç	ù	º	À	Ã	Î	þ	¸
8	(	8	H	X	h	x	ê	ÿ	¿	©		Ï	Þ	°
9	)	9	I	Y	i	y	ë	Ö	®				Ú	¨
A	*	:	J	Z	j	z	è	Ü	¬				Û	•
B	+	;	K	[	k	{	ï	ø	½				Ù	¹
C	,	<	L	\	l	¦	î	£	¼				ý	³
D	−	=	M	]	m	}	ì	Ø	¡	¢		¦	Ý	²
E	.	>	N	^	n	~	Ä	×	«	¥		Ì	¯	
F	/	?	O	_	o	▒	Å	ƒ	»		¤		´	

The print sample shown above is issued with a head density of 8 dots/mm and an enlargement ratio of 2 (vertical/horizontal) and DOS 858.

00H to 1FH are control code and not available.

[ESC+XM] XM Font (Basic size 24 x 24 dots)

Hexadecimal code	ESC	XM	Parameter
	<1B>$_{16}$	<58>$_{16}$<4D>$_{16}$	n...n
Initial value	None		

Valid range and term of command	When the power is OFF	The set parameter is not maintained.
	Valid range within items	The set parameter becomes invalid.
	Valid range between items	The set parameter becomes invalid.

[Function]

Font with the basic size of W24x H24 dots is specified.

[Format]

<XM>n...n

- Parameter

  n [Print data] = Data

[Coding Example]

```
<A>
<V>100<H>200<P>2<L>0304<XM>ABCDE
<Q>2
<Z>
```

[Supplementary Explanation]

- XM Font allows the selection of fixed pitch and proportional pitch.
- Setting of fixed pitch and proportional pitch can be configured with command or "Settings mode" of this product.
- The character set varies according to setting of European Code Page <CE>.

[Valid Commands]

Print Position	<V>	<H>								
Modification	<P>	<L>	<%>	<PS>	<PR>	<F>	<&>	</>	<0>	<WD>
Barcode	<D><d>	<BL><d>								
Calendar	<WA>*1									

*1 This command requires optional RTC (Real Time Clock) Kit.

XM font character set

Basic size is 24 x 24 dots (width x height)

XM FONT(L0202) 203DPI

	2	3	4	5	6	7	8	9	A	B	C	D	E	F
0		0	@	P	`	p	Ç	É	á	0		ð	ó	-
1	!	1	A	Q	a	q	ü	æ	í			Ð	ß	±
2	”	2	B	R	b	r	é	Æ	ó			Ê	Ô	‗
3	#	3	C	S	c	s	â	ô	ú			Ë	Ò	¾
4	$	4	D	T	d	t	ä	ö	ñ			È	õ	¶
5	%	5	E	U	e	u	à	ò	Ñ	Á		€	Õ	§
6	&	6	F	V	f	v	å	û	ª	Â	ã	Í	µ	÷
7	’	7	G	W	g	w	ç	ù	º	À	Ã	Î	þ	¸
8	(	8	H	X	h	x	ê	ÿ	¿	©		Ï	Þ	°
9	)	9	I	Y	i	y	ë	Ö	®				Ú	¨
A	*	:	J	Z	j	z	è	Ü	¬				Û	•
B	+	;	K	[	k	{	ï	ø	½			▒	Ù	¹
C	,	<	L	\	l	¦	î	£	¼				ý	³
D	—	=	M	]	m	}	ì	Ø	¡	¢		¦	Ý	²
E	.	>	N	^	n	~	Ä	×	«	¥		Ì	¯	
F	/	?	O	_	o	▒	Å	ƒ	»		¤		´	

The print sample shown above is issued with a head density of 8 dots/mm and an enlargement ratio of 2 (vertical/horizontal) and DOS 858.

00H to 1FH are control code and not available.

[ESC+XB] XB Font (Basic size 48 x 48 dots)

Hexadecimal code	ESC	XB	Parameter
	<1B>$_{16}$	<58>$_{16}$<42>$_{16}$	an...n
Initial value	a=0		

Valid range and term of command	When the power is OFF	The set parameter is not maintained.
	Valid range within items	The set parameter becomes invalid.
	Valid range between items	The set parameter becomes invalid.

[Function]

Font with the basic size of: W48 x H48 dots is specified.

[Format]

<XB>an...n

- Parameter

  a [Smoothing]
  0 : Smoothing disabled
  1 : Smoothing ON (Only available if expansion factor is between 3 and 9)
  n [Print data] = Data

[Coding Example]

<A>
<V>100<H>200<P>2<L>0304**<XB>0ABCDE**
<Q>2
<Z>

[Supplementary Explanation]

- XB Font allows the selection of fixed pitch and proportional pitch.
- Setting of fixed pitch and proportional pitch can be configured with command or "Settings mode" of this product.
- When the smoothing is enabled, and Enlargement <L> is set to 1 or 2 or from 13 to 36, the smoothing function will be ignored.
- The character set varies according to setting of European Code Page <CE>.

[Valid Commands]

Print Position	<V>	<H>								
Modification	<P>	<L>	<%>	<PS>	<PR>	<F>	<&>	</>	<0>	<WD>
Barcode	<D><d>	<BL><d>								
Calendar	<WA>*1									

*1 This command requires optional RTC (Real Time Clock) Kit.

XB font character set

Basic size is 48 x 48 dots (width x height)

XB FONT(L0101) 203DPI

	2	3	4	5	6	7	8	9	A	B	C	D	E	F
0		0	@	P	`	p	Ç	É	á	0		ð	Ó	–
1	!	1	A	Q	a	q	ü	æ	í			Ð	ß	±
2	″	2	B	R	b	r	é	Æ	ó			Ê	Ô	‗
3	#	3	C	S	c	s	â	ô	ú			Ë	Ò	¾
4	$	4	D	T	d	t	ä	ö	ñ			È	õ	¶
5	%	5	E	U	e	u	à	ò	Ñ	Á		€	Õ	§
6	&	6	F	V	f	v	å	û	ª	Â	ã	Í	µ	÷
7	′	7	G	W	g	w	ç	ù	º	À	Ã	Î	þ	¸
8	(	8	H	X	h	x	ê	ÿ	¿	©		Ï	Þ	°
9	)	9	I	Y	i	y	ë	Ö	®				Ú	¨
A	*	:	J	Z	j	z	è	Ü	¬				Û	•
B	+	;	K	[	k	{	ï	ø	½				Ù	¹
C	,	<	L	\	l	¦	î	£	¼				ý	³
D	–	=	M	]	m	}	ì	Ø	¡	¢		¦	Ý	²
E	.	>	N	^	n	~	Ä	×	«	¥		Ì	¯	
F	/	?	O	_	o		Å	ƒ	»		¤		´	

The print sample shown above is issued with a head density of 8 dots/mm and an enlargement ratio of 1 (vertical/horizontal) and DOS 858.

00H to 1FH are control code and not available.

[ESC+XL] XL Font (Basic size 48 x 48 dots)

Hexadecimal code	ESC	XL	Parameter
	<1B>$_{16}$	<58>$_{16}$<4C>$_{16}$	an...n
Initial value	None		

Valid range and term of command	When the power is OFF	The set parameter is not maintained.
	Valid range within items	The set parameter becomes invalid.
	Valid range between items	The set parameter becomes invalid.

[Function]

Font with the basic size of: W48 x H48 dots is specified.

[Format]

<XL>an...n

- Parameter

a [Smoothing]
0 : Smoothing disabled
1 : Smoothing ON (Only available if expansion factor is between 3 and 9)
n [Print data] = Data

[Coding Example]

<A>
<V>100<H>200<P>2<L>0304**<XL>0ABCDE**
<Q>2
<Z>

[Supplementary Explanation]

- XL Font allows the selection of fixed pitch and proportional pitch.
- Setting of fixed pitch and proportional pitch can be configured with command or "Settings mode" of this product.
- When the smoothing is enabled, and Enlargement <L> is set to 1 or 2 or from 13 to 36, the smoothing function will be ignored.
- The character set varies according to setting of European Code Page <CE>.

[Valid Commands]

Print Position	<V>	<H>								
Modification	<P>	<L>	<%>	<PS>	<PR>	<F>	<&>	</>	<0>	<WD>
Barcode	<D><d>	<BL><d>								
Calendar	<WA>*1									

*1 This command requires optional RTC (Real Time Clock) Kit.

XL font character set

Basic size is 48 x 48 dots (width x height)

XL FONT(L0101) 203DPI

	2	3	4	5	6	7	8	9	A	B	C	D	E	F
0		0	@	P	‘	p	Ç	É	á	0		ð	Ó	-
1	!	1	A	Q	a	q	ü	æ	í			Ð	β	±
2	″	2	B	R	b	r	é	Æ	ó			Ê	Ô	‗
3	#	3	C	S	c	s	â	ô	ú			Ë	Ò	¾
4	$	4	D	T	d	t	ä	ö	ñ			È	õ	¶
5	%	5	E	U	e	u	à	ò	Ñ	Á		€	Õ	§
6	&	6	F	V	f	v	å	û	ª	Â	ã	Í	µ	÷
7	′	7	G	W	g	w	ç	ù	º	À	Ã	Î	þ	¸
8	(	8	H	X	h	x	ê	ÿ	¿	©		Ï	Þ	°
9	)	9	I	Y	i	y	ë	Ö	®				Ú	¨
A	*	:	J	Z	j	z	è	Ü	¬				Û	·
B	+	;	K	[	k	{	ï	ф	½				Ù	¹
C	,	<	L	\	l	¦	î	£	¼				ý	³
D	−	=	M	]	m	}	ì	Ø	¡	¢		¦	Ý	²
E	.	>	N	^	n	~	Ä	×	«	¥		Ì	¯	
F	/	?	O	_	o		Å	ƒ	»		¤		´	

The print sample shown above is issued with a head density of 8 dots/mm and an enlargement ratio of 1 (vertical/horizontal) and DOS 858.

00H to 1FH are control code and not available.

[ESC+OA] OCR-A Font

Hexadecimal code	ESC	OA	Parameter
	<1B>$_{16}$	<4F>$_{16}$<41>$_{16}$	n...n
Initial value	None		

Valid range and term of command	When the power is OFF	The set parameter is not maintained.
	Valid range within items	The set parameter becomes invalid.
	Valid range between items	The set parameter becomes invalid.

[Function]

Specifying OCR-A font.

[Format]

<OA>n...n

- Parameter

  n [Print data] = Data

[Coding Example]

```
<A>
<V>100<H>100<P>2<L>0202<OA>ABC
<Q>2
<Z>
```

[Supplementary Explanation]

- Refer to the table below for font size of each head density.

[Font size table]

Head density	Font size (dots)
203 dpi	W15 x H22
305 dpi	W22 x H33
609 dpi	W44 x H66

[Valid Commands]

Print Position	<V>	<H>								
Modification	<P>	<L>	<%>	<F>	<&>	</>	<0>	<WD>		
Barcode	<D><d>	<BL><d>								
Calendar	<WA>*1									

*1 This command requires optional RTC (Real Time Clock) Kit.

OCR-A font character set

OCR-A font specification.

0A FONT L0202 203DPI

	2	3	4	5	6	7	8	9	A	B	C	D	E	F
0		0		P										
1		1	A	Q										
2		2	B	R										
3		3	C	S										
4	$	4	D	T										
5		5	E	U										
6		6	F	V										
7		7	G	W										
8		8	H	X										
9		9	I	Y										
A			J	Z										
B			K											
C			L											
D			M											
E	.	>	N											
F	/		O											

The print sample shown above is issued with a head density of 8 dots/mm, a font size of 15 x 22, and an enlargement ratio of 2 (vertical/horizontal).

00H to 1FH are control code and not available.

[ESC+OB] OCR-B Font

Hexadecimal code	ESC	OB	Parameter
	<1B>$_{16}$	<4F>$_{16}$<42>$_{16}$	n...n
Initial value	None		

Valid range and term of command	When the power is OFF	The set parameter is not maintained.
	Valid range within items	The set parameter becomes invalid.
	Valid range between items	The set parameter becomes invalid.

[Function]

Specifying OCR-B font.

[Format]

<OB>n...n

- Parameter

  n [Print data] = Data

[Coding Example]

```
<A>
<V>100<H>200<P>2<L>0202<OB>ABC
<Q>2
<Z>
```

[Supplementary Explanation]

- Refer to the table below for font size of each head density.

[Font size table]

Head density	Font size (dots)
203 dpi (8 dots/mm)	W20 x H24
305 dpi (12 dots/mm)	W30 x H36
609 dpi (24 dots/mm))	W60 x H72

[Valid Commands]

Print Position	<V>	<H>								
Modification	<P>	<L>	<%>	<F>	<&>	</>	<0>	<WD>		
Barcode	<D><d>	<BL><d>								
Calendar	<WA>*1									

*1 This command requires RTC (Real Time Clock) Kit.

OCR-B font character set

OCR-B font specification.

OB FONT(L0202) 203DPI

	2	3	4	5	6	7	8	9	A	B	C	D	E	F
0		0	@	P										
1	!	1	A	Q										
2	"	2	B	R										
3	#	3	C	S										
4	$	4	D	T										
5	%	5	E	U										
6	&	6	F	V										
7	'	7	G	W										
8	(	8	H	X										
9	)	9	I	Y										
A	*	:	J	Z										
B	+	;	K	¥										
C	,	<	L	¥										
D	-	=	M											
E	.	>	N											
F	/	?	O											

The print sample shown above is issued with a head density of 8 dots/mm, a font size of 20 x 24, and an enlargement ratio of 2 (vertical/horizontal).

00H to 1FH are control code and not available.

[ESC+U] U Font (Basic size 5 x 9 dots)

Hexadecimal code	ESC	U	Parameter
	<1B>$_{16}$	<55>$_{16}$	n...n
Initial value	None		

Valid range and term of command	When the power is OFF	The set parameter is not maintained.
	Valid range within items	The set parameter becomes invalid.
	Valid range between items	The set parameter becomes invalid.

[Function]

Font with the basic size of W5 x H9 dots is specified.

[Format]

<U>n...n

- Parameter

  n [Print data] = Data

[Coding Example]

```
<A>
<V>100<H>200<P>2<L>0304<U>ABCDE
<Q>2
<Z>
```

[Supplementary Explanation]

- U font only allows the setting of a fixed pitch.
- The character set varies according to setting of European Code Page <CE>.

[Valid Commands]

Print Position	<V>	<H>								
Modification	<P>	<L>	<%>	<F>	<&>	</>	<0>	<WD>		
Barcode	<D><d>	<BL><d>								
Calendar	<WA>*1									

*1 This command requires optional RTC (Real Time Clock) Kit.

U font character set

Basic size is 5 x 9 dots (width x height)

U FONT(L0303) 203DPI

	2	3	4	5	6	7	8	9	A	B	C	D	E	F
0		0	@	P	`	p	Ç	É	á	Ø		ð	ó	–
1	!	1	A	Q	a	q	ü	æ	í			Ð	ß	±
2	"	2	B	R	b	r	é	Æ	ó			Ê	Ô	=
3	#	3	C	S	c	s	â	ô	ú			Ë	Ò	¾
4	$	4	D	T	d	t	ä	ö	ñ			È	õ	¶
5	%	5	E	U	e	u	à	ò	Ñ	Á		€	Õ	§
6	&	6	F	V	f	v	à	û	ª	Â	ã	Í	µ	÷
7	´	7	G	W	g	w	ç	ù	º	À	Ã	Î	Þ	¸
8	(	8	H	X	h	x	ê	ÿ	¿	©		Ï	þ	°
9	)	9	I	Y	i	y	ë	Ö	®				Ú	¨
A	*	:	J	Z	j	z	è	Ü	¬				Û	•
B	+	;	K	[	k	{	ï	ø	½				Ù	¹
C	,	<	L	\	l	¦	î	£	¼				ý	³
D	–	=	M	]	m	}	ì	Ø	¡	¢		¦	Ý	²
E	.	>	N	^	n	¯	Ä	×	«	¥		ì	¯	
F	/	?	O	_	o	▒	Å	ƒ	»		▒		´	

The print sample shown above is issued with a head density of 8 dots/mm, an enlargement ratio of 3 (vertical/horizontal) and DOS 858.

00H to 1FH are control code and not available.

[ESC+S] S Font (Basic size 8 x 15 dots)

Hexadecimal code	ESC	S	Parameter
	<1B>$_{16}$	<53>$_{16}$	n...n
Initial value	None		

Valid range and term of command	When the power is OFF	The set parameter is not maintained.
	Valid range within items	The set parameter becomes invalid.
	Valid range between items	The set parameter becomes invalid.

[Function]

Font with the basic size of W8 x H15 dots is specified.

[Format]

<S>n...n

- Parameter

  n [Print data] = Data

[Coding Example]

```
<A>
<V>100<H>200<P>2<L>0304<S>ABCDE
<Q>2
<Z>
```

[Supplementary Explanation]

- S font only allows the setting of a fixed pitch.
- The character set varies according to setting of European Code Page <CE>.

[Valid Commands]

Print Position	<V>	<H>								
Modification	<P>	<L>	<%>	<F>	<&>	</>	<0>	<WD>		
Barcode	<D><d>	<BL><d>								
Calendar	<WA>*1									

*1 This command requires optional RTC (Real Time Clock) Kit.

S font character set

Basic size is 8 x 15 dots (width x height)

S FONT(L0303) 203DPI

	2	3	4	5	6	7	8	9	A	B	C	D	E	F
0		0	@	P	'	p	Ç	É	á	0		ð	ó	–
1	!	1	A	Q	a	q	ü	æ	í			Ð	β	±
2	"	2	B	R	b	r	é	Æ	ó			Ê	ô	‗
3	#	3	C	S	c	s	â	ô	ú			Ë	ò	¾
4	$	4	D	T	d	t	ä	ö	ñ			È	õ	¶
5	%	5	E	U	e	u	à	ò	Ñ	Á		€	Õ	§
6	&	6	F	V	f	v	å	û	ª	Â	ã	Í	µ	÷
7	'	7	G	W	g	w	ç	ù	º	À	Ã	Î	Þ	¸
8	(	8	H	X	h	x	ê	ÿ	¿	©		Ï	þ	°
9	)	9	I	Y	i	y	ë	Ö	®				Ú	¨
A	*	:	J	Z	j	z	è	Ü	¬				Û	•
B	+	;	K	[	k	{	ï	Ø	½				Ù	¹
C	,	<	L	\	l	¦	î	£	¼				Ý	³
D	–	=	M	]	m	}	ì	Ø	¡	¢		¦	Ý	²
E	.	>	N	^	n	~	Ä	×	«	¥		ì	¯	
F	/	?	O	_	o	▒	Å	ƒ	»		¤		´	

The print sample shown above is issued with a head density of 8 dots/mm, an enlargement ratio of 3 (vertical/horizontal) and DOS 858.

00H to 1FH are control code and not available.

[ESC+M] M Font (Basic size 13 x 20 dots)

Hexadecimal code	ESC	M	Parameter
	<1B>$_{16}$	<4D>$_{16}$	n...n
Initial value	None		

Valid range and term of command	When the power is OFF	The set parameter is not maintained.
	Valid range within items	The set parameter becomes invalid.
	Valid range between items	The set parameter becomes invalid.

[Function]

Font with the basic size of W13 x H20 dots is specified.

[Format]

<M>n...n

- Parameter

  n [Print data] = Data

[Coding Example]

```
<A>
<V>100<H>200<P>2<L>0304<M>ABCDE
<Q>2
<Z>
```

[Supplementary Explanation]

- M font only allows the setting of a fixed pitch.
- The character set varies according to setting of European Code Page <CE>.

[Valid Commands]

Print Position	<V>	<H>								
Modification	<P>	<L>	<%>	<F>	<&>	</>	<0>	<WD>		
Barcode	<D><d>	<BL><d>								
Calendar	<WA>*1									

*1 This command requires optional RTC (Real Time Clock) Kit.

M font character set

Basic size is 13 x 20 dots (width x height)

M FONT(L0202) 203DPI

	2	3	4	5	6	7	8	9	A	B	C	D	E	F
0		0	@	P	'	p	Ç	É	á	Ø		ð	ó	–
1	!	1	A	Q	a	q	ü	æ	í			Đ	β	±
2	”	2	B	R	b	r	é	Æ	ó			Ê	Ô	‗
3	#	3	C	S	c	s	â	ô	ú			Ë	Ò	¾
4	$	4	D	T	d	t	ä	ö	ñ			È	õ	¶
5	%	5	E	U	e	u	à	ò	Ñ	Á		€	Õ	§
6	&	6	F	V	f	v	å	û	ª	Â	ã	Í	µ	÷
7	’	7	G	W	g	w	Ç	ù	º	À	Ã	Î	þ	¸
8	(	8	H	X	h	x	ê	ÿ	¿	©		Ï	Þ	°
9	)	9	I	Y	i	y	ë	Ö	®				Ú	¨
A	*	:	J	Z	j	z	è	Ü	¬				Û	•
B	+	;	K	[	k	{	ï	ø	½				Ù	¹
C	,	<	L	\	l	¦	î	£	¼				ý	³
D	–	=	M	]	m	}	ì	Ø	¡	¢		¦	Ý	²
E	.	>	N	^	n	~	Ä	×	«	¥		Ì	¯	
F	/	?	O	_	o	▒	Å	ƒ	»		¤		´	

The print sample shown above is issued with a head density of 8 dots/mm, an enlargement ratio of 2 (vertical/horizontal) and DOS 858.

00H to 1FH are control code and not available.

[ESC+WB] WB Font (Basic size 18 x 30 dots)

Hexadecimal code	ESC	WB	Parameter
	<1B>$_{16}$	<57>$_{16}$<42>$_{16}$	an...n
Initial value	None		

Valid range and term of command	When the power is OFF	The set parameter is not maintained.
	Valid range within items	The set parameter becomes invalid.
	Valid range between items	The set parameter becomes invalid.

[Function]

Font with the basic size of W18 x H30 dots is specified.

[Format]

<WB>an...n

- Parameter

  a [Smoothing]
  0 : Smoothing disabled
  1 : Smoothing ON (Only available if Enlargement <L> is between 3 and 12)
  n [Print data] = Data

[Coding Example]

<A>
<V>100<H>200<P>2<L>0304**<WB>0ABCDE**
<Q>2
<Z>

[Supplementary Explanation]

- WB font only allows the setting of a fixed pitch.
- When the smoothing is enabled, and the expansion <L> command is set to 1 or 2 or from 13 to 36, the smoothing function will be ignored.
- The character set varies according to setting of European Code Page <CE>.

[Valid Commands]

Print Position	<V>	<H>								
Modification	<P>	<L>	<%>	<F>	<&>	</>	<0>	<WD>		
Barcode	<D><d>	<BL><d>								
Calendar	<WA>*1									

*1 This command requires optional RTC (Real Time Clock) Kit.

WB font character set

Basic size is 18 x 30 dots (width x height)

WB FONT(L0101) 203DPI

	2	3	4	5	6	7	8	9	A	B	C	D	E	F
0		0	@	P	‘	p	Ç	É	á	0		ð	ó	-
1	!	1	A	Q	a	q	ü	æ	í			Ð	β	±
2	”	2	B	R	b	r	é	Æ	ó			Ê	Ô	‗
3	#	3	C	S	c	s	â	ô	ú			Ë	Ò	¾
4	$	4	D	T	d	t	ä	ö	ñ			È	õ	¶
5	%	5	E	U	e	u	à	ò	Ñ	Á		€	Õ	§
6	&	6	F	V	f	v	å	û	ª	Â	ã	Í	µ	÷
7	’	7	G	W	g	w	ç	ù	º	À	Ã	Î	Þ	¸
8	(	8	H	X	h	x	ê	ÿ	¿	©		Ï	Þ	°
9	)	9	I	Y	i	y	ë	Ö	®				Ú	¨
A	*	:	J	Z	j	z	è	Ü	¬				Û	•
B	+	;	K	[	k	{	ï	ø	½				Ù	¹
C	,	<	L	\	l	¦	î	£	¼				ý	³
D	-	=	M	]	m	}	ì	Ø	¡	¢		¦	Ý	²
E	.	>	N	^	n	~	Ä	×	«	¥		ì	¯	
F	/	?	O	_	o	▒	Å	ƒ	»		¤		’	

The print sample shown above is issued with a head density of 8 dots/mm, an enlargement ratio of 1 (vertical/horizontal) and DOS 858.

00H to 1FH are control code and not available.

[ESC+WL] WL Font (Basic size 28 x 52 dots)

Hexadecimal code	ESC	WL	Parameter
	<1B>$_{16}$	<57>$_{16}$<4C>$_{16}$	an...n
Initial value	None		

Valid range and term of command	When the power is OFF	The set parameter is not maintained.
	Valid range within items	The set parameter becomes invalid.
	Valid range between items	The set parameter becomes invalid.

[Function]

Font with the basic size of W28 x H52 dots is specified.

[Format]

<WL>an...n

- Parameter

  a [Smoothing]
  0 : Smoothing disabled
  1 : Smoothing ON (Only available if Enlargement <L> is between 3 and 12)
  n [Print data] = Data

[Coding Example]

<A>
<V>100<H>200<P>2<L>0304**<WL>0ABCDE**
<Q>2
<Z>

[Supplementary Explanation]

- WL font only allows the setting of a fixed pitch.
- When the smoothing is enabled, and the expansion <L> command is set to 1 or 2 or from 13 to 36, the smoothing function will be ignored.
- The character set varies according to setting of European Code Page <CE>.

[Valid Commands]

Print Position	<V>	<H>								
Modification	<P>	<L>	<%>	<F>	<&>	</>	<0>	<WD>		
Barcode	<D><d>	<BL><d>								
Calendar	<WA>*1									

*1 This command requires optional RTC (Real Time Clock) Kit.

WL font character set

Basic size is 28 x 52 dots (width x height)

WL FONT(L0101) 203DPI

	2	3	4	5	6	7	8	9	A	B	C	D	E	F
0		0	@	P	’	p	Ç	É	á	0		ð	ó	–
1	!	1	A	Q	a	q	ü	æ	í			Ð	ß	±
2	”	2	B	R	b	r	é	Æ	ó			Ê	Ô	‗
3	#	3	C	S	c	s	â	ô	ú			Ë	Ò	¾
4	$	4	D	T	d	t	ä	ö	ñ			È	õ	¶
5	%	5	E	U	e	u	à	ò	Ñ	Á		€	Õ	§
6	&	6	F	V	f	v	å	û	ª	Â	ã	Í	µ	÷
7	’	7	G	W	g	w	ç	ù	º	À	Ã	Î	þ	¸
8	(	8	H	X	h	x	ê	ÿ	¿	©		Ï	Þ	°
9	)	9	I	Y	i	y	ë	Ö	®				Ú	¨
A	*	:	J	Z	j	z	è	Ü	¬				Û	·
B	+	;	K	[	k	{	ï	ø	½				Ù	¹
C	,	<	L	\	l	¦	î	£	¼				ý	³
D	–	=	M	]	m	}	ì	Ø	¡	¢		¦	Ý	²
E	.	>	N	^	n	~	Ä	×	«	¥		Ì	¯	
F	/	?	O	_	o		Å	ƒ	»		¤		´	

The print sample shown above is issued with a head density of 8 dots/mm, an enlargement ratio of 1 (vertical/horizontal) and DOS 858.

00H to 1FH are control code and not available.

[ESC+$] Outline Font Design

Hexadecimal code	ESC	$	Parameter
	<1B>$_{16}$	<24>$_{16}$	a,bbb,ccc,d
Initial value	a=A, bbb=50, ccc=50, d=0		

Valid range and term of command	When the power is OFF	The set parameter is not maintained.
	Valid range within items	The set parameter is valid until the next specification is made.
	Valid range between items	The set parameter becomes initial value at the next item <A>.

[Function]

Specifying the type, size, and shape of outline font.

[Format]

<$>a,bbb,ccc,d

- Parameter

a [Font type]
A : Helvetica bold (Proportional)
B : Helvetica bold (Inter-character pitch fixed)
K : Kanji specified by hexadecimal number*1
L : Kanji specified by binary number*1
k : Kanji (vertical) specified by hexadecimal number*1
l : Kanji (vertical) specified by hexadecimal number*1
b [Font width] = Valid range: 1 to 999 dots
c [Font height] = Valid range: 1 to 999 dots
d [Font design]
0 : Normal font (Black)
1 : White characters on black background
2 : Grey font (Pattern 1)
3 : Grey font (Pattern 2)
4 : Grey font (Pattern 3)
5 : Font with shadow
6 : White characters with shadow on black background
7 : Mirrored font
8 : Normal italic font
9 : White italic characters with shadow on black background

*1 Will specify Kanji outline font.

[Coding Example]

Font type: A, font width: 100 dots,

font height: 100 dots, font design: 1

```
<A>
<V>100<H>100<P>2
<$>A,100,100,1<$=>SATO
<Q>2
<Z>
```

[Supplementary Explanation]

- Italic characters are tilt in an angle of 15-degree, within their specified width.
- The outline font printing command <$=> shall be executed after the outline font design selection <$>.
- For the font design 1 through 9, if the specified dot setting is irregularly small, the font cannot be identified.
- If the font width / height are very small, there can be cases that the font is squeezed.

[Valid Commands]

Font	<$=>									

Outline Font design

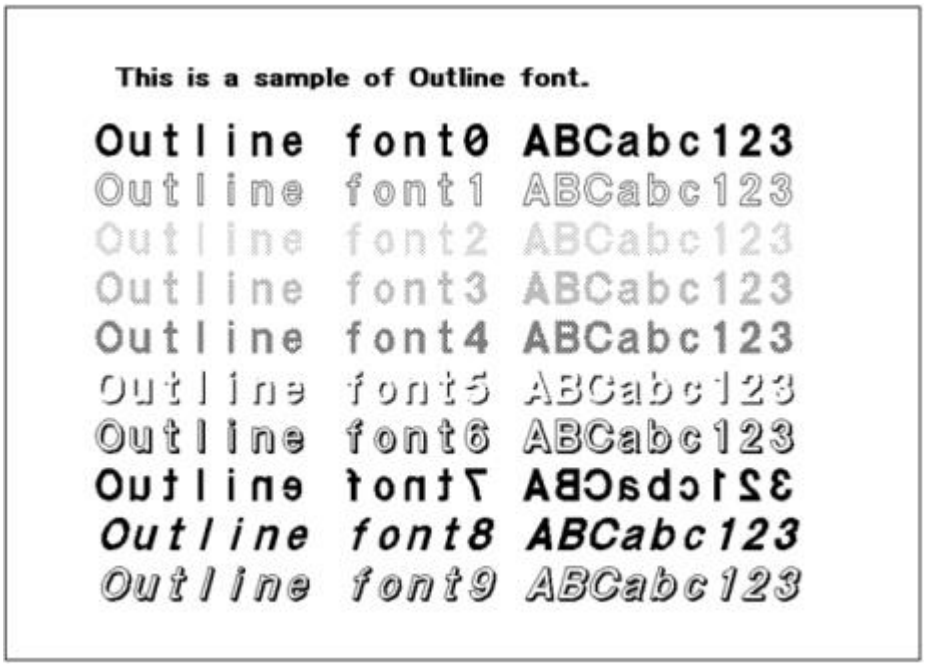

The print sample shown above is issued with a head density of 8 dots/mm.

[ESC+$=] Outline Font Print

Hexadecimal code	ESC	$=	Parameter
	<1B>$_{16}$	<24>$_{16}$<3D>$_{16}$	n...n
Initial value	None		

Valid range and term of command	When the power is OFF	The set parameter is not maintained.
	Valid range within items	The set parameter becomes invalid.
	Valid range between items	The set parameter becomes invalid.

[Function]

Specifying printing command of outline font.

[Format]

<$=>n...n

- Parameter

  n [Print data] = Data

[Coding Example]

Print data: SATO

<A>
<V>100<H>100<P>2
<$>A,100,100,1**<$=>SATO**
<Q>2
<Z>

[Supplementary Explanation]

- The outline font printing command <$=> shall be executed after the outline font design <$>.
- Font height includes both ascender and descender area. For proportional pitch, the character width of outline font differs depending on the font to be used.
- Use character pitch command <P> to specify font pitch.
- Italic characters are tilt in an angle of 15-degree, within their specified width. Font height includes both ascender and descender area.
- For the font design 1 through 9, if the specified dot setting is irregularly small, the font cannot be identified.
- If the font width / height are very small, there can be cases that the font is squeezed.
- JIS, Shift JIS, or Unicode (UTF-16, UTF-8) can be used for Kanji outline font, which should correspond with this product settings to proper printing. Specify Kanji code by <KC> command or "Settings Mode" of this product.

[Valid Commands]

Print position	<V>	<H>								
Modification	<P>	<%>	<$>	<F>						

Calendar	<WA>*1									

*1 This command requires optional RTC (Real Time Clock) Kit.

Outline Font Character Set

Characters consists of Helvetica bold (fixed pitch), 50 x 50 dots, Standard font (Black)

OUTLINE FONT0 203DPI

	2	3	4	5	6	7	8	9	A	B	C	D	E	F
0		0	@	P	‘	p	Ç	É	á			ð	Ó	–
1	!	1	A	Q	a	q	ü	æ	í			Ð	β	±
2	"	2	B	R	b	r	é	Æ	ó			Ê	Ô	=
3	#	3	C	S	c	s	â	ô	ú			Ë	Ò	¾
4	$	4	D	T	d	t	ä	ö	ñ			È	õ	
5	%	5	E	U	e	u	à	ò	Ñ	Á		€	Õ	
6	&	6	F	V	f	v	å	û	ª	Â	ã	Í	µ	÷
7	´	7	G	W	g	w	ç	ù	º	À	Ã	Î	þ	¸
8	(	8	H	X	h	x	ê	ÿ	¿	©		Ï	Þ	°
9	)	9	I	Y	i	y	ë	Ö	®				Ú	¨
A	*	:	J	Z	j	z	è	Ü	¬				Û	·
B	+	;	K	[	k	{	ï	ø	½				Ù	¹
C	,	<	L	\	l	¦	î	£	¼				ý	³
D	–	=	M	]	m	}	ì	Ø	¡	¢			Ý	²
E	.	>	N	^	n	~	Ä	×	«	¥		Ì	¯	
F	/	?	O	_	o		Å	ƒ	»				´	

The print sample shown above is issued with a head density of 8 dots/mm.

00H to 1FH are control code and not available.

[ESC+RD] CG Font

Hexadecimal code	ESC	<RD>	Parameter
	<1B>$_{16}$	<52>$_{16}$<44>$_{16}$	abc,ddd,eee,n...n
Initial value	b=0		

Valid range and term of command	When the power is OFF	The set parameter is not maintained.
	Valid range within items	The set parameter becomes invalid.
	Valid range between items	The set parameter becomes invalid.

[Function]

Specifying CG font type, font style, font size, and print data.

[Format]

<RD>abc,ddd,eee,n...n

- Parameter

a [Font type]
A [SATO CG Sleek]
B [SATO CG Stream]

Symbol	Parameter name	Setting value	Character set
b	Character encoding selection	-	Character set specified by <CE>
		0	858 (initial value)
		1	ISO 8859/1 Latin 1
		2	ISO 8859/2 Latin 2
		3	ISO 8859//9 Latin 5
		4	CP737 DOS Greek
		5	CP855 DOS Cyrillic
		6	-
		7	-
		8	PC-850 Multilingual
		9	CP852 DOS Central European
		A	CP857 DOS Turkish
		B	CP866 DOS Cyrillic II
		C	CP1250 Windows Central European
		D	CP1251 Windows Cyrillic
		E	CP1252 Windows Western Latin 1
		F	CP1253 Windows Greek
		G	CP1254 Windows Turkish
		H	-
		I	-
		J	CP1257 Windows Baltic

Symbol	Parameter name	Setting value	Character set
		K	CP869 IBM Greek
		L	-
		M	Japanese X0201 *1
		@	Unicode UTF-8

*1: Specifying X0201 prints ISO 8859-1 Latin 1 character set.

c [Font style]
0 Standard
1 Bold
2 Italic
3 Bold + Italic

d [Width]
Valid Range: 004 to 999 (dots)
Valid Range: P02 to P99 (points)

e [Height]
Valid Range: 004 to 999 (dots)
Valid Range: P02 to P99 (points)

n [Print data] = Data

[Coding Example]

Font type: SATO CG Sleek, Width: 10 pts, Height: 10 pts

<A>
<V>100<H>100<P>2
<RD>A00,P10,P10,SATO
<Q>2
<Z>

[Supplementary Explanation]

- The font size is set by [dot number] or [point number].
- The dot size does vary with printer type. (Refer to the table below)

Head density	Size of 1 dot (mm)
203 dpi	0.125
305 dpi	0.083
609 dpi	0.042

- 1 point is 0.35 mm.
- Because this command is for the compatibility with previous one, use <RH> in general.

[Font size range]

Head density	Valid range:	Valid range:
	Width range (dots)	Height range (dots)
203 dpi	4 to 832	4 to 999
305 dpi	5 to 999	5 to 999

Head density	Valid range:	Valid range:
	Width range (dots)	Height range (dots)
609 dpi	9 to 999	9 to 999

[Valid Commands]

Print Position	<V>	<H>								
Modification	<P>	<%>	<F>	<PS>	<PR>					

SATO CG Sleek font character set

SATO CG Sleek font settings

SATO CG Sleek FONT 203DPI

	2	3	4	5	6	7	8	9	A	B	C	D	E	F
0		0	@	P	`	p	Ç	É	á	⠿	└	ð	Ó	-
1	!	1	A	Q	a	q	ü	æ	í	▒	┴	Ð	ß	±
2	"	2	B	R	b	r	é	Æ	ó	▓	┬	Ê	Ô	‗
3	#	3	C	S	c	s	â	ô	ú	│	├	Ë	Ò	¾
4	$	4	D	T	d	t	ä	ö	ñ	┤	─	È	õ	¶
5	%	5	E	U	e	u	à	ò	Ñ	Á	┼	€	Õ	§
6	&	6	F	V	f	v	å	û	ª	Â	ã	Í	µ	÷
7	'	7	G	W	g	w	ç	ù	º	À	Ã	Î	þ	¸
8	(	8	H	X	h	x	ê	ÿ	¿	©	╚	Ï	Þ	°
9	)	9	I	Y	i	y	ë	Ö	®	╣	╔	┘	Ú	¨
A	*	:	J	Z	j	z	è	Ü	¬	║	╩	┌	Û	·
B	+	;	K	[	k	{	ï	ø	½	╗	╦	■	Ù	¹
C	,	<	L	\	l	|	î	£	¼	╝	╠	▄	ý	³
D	-	=	M	]	m	}	ì	Ø	¡	¢	═	¦	Ý	²
E	.	>	N	^	n	~	Ä	×	«	¥	╬	Ì	¯	■
F	/	?	O	_	o		Å	ƒ	»	┐	¤	▬	´	

The print sample shown above is issued with a head density of 8 dots/mm, 40 × 40 points and DOS 858.

00H to 1FH are control code and not available.

SATO CG Stream font character set

SATO CG Stream Font settings

SATO CG Stream FONT 203DPI

	2	3	4	5	6	7	8	9	A	B	C	D	E	F
0		0	@	P	`	p	Ç	É	á	▒	└	ð	Ó	-
1	!	1	A	Q	a	q	ü	æ	í	▓	┴	Ð	ß	±
2	"	2	B	R	b	r	é	Æ	ó	▓	┬	Ê	Ô	‗
3	#	3	C	S	c	s	â	ô	ú	│	├	Ë	Ò	¾
4	$	4	D	T	d	t	ä	ö	ñ	┤	─	È	õ	¶
5	%	5	E	U	e	u	à	ò	Ñ	Á	┼	€	Õ	§
6	&	6	F	V	f	v	å	û	ª	Â	ã	Í	µ	÷
7	'	7	G	W	g	w	ç	ù	º	À	Ã	Î	þ	¸
8	(	8	H	X	h	x	ê	ÿ	¿	©	╚	Ï	Þ	°
9	)	9	I	Y	i	y	ë	Ö	®	╣	╔	┘	Ú	¨
A	*	:	J	Z	j	z	è	Ü	¬	║	╩	┌	Û	·
B	+	;	K	[	k	{	ï	ø	½	╗	╦	█	Ù	¹
C	,	<	L	\	l	|	î	£	¼	╝	╠	▄	ý	³
D	-	=	M	]	m	}	ì	Ø	¡	¢	═	¦	Ý	²
E	.	>	N	^	n	~	Ä	×	«	¥	╬	Ì	¯	■
F	/	?	O	_	o		Å	ƒ	»	┐	¤	▬	´	

The print sample shown above is issued with a head density of 8 dots/mm, 40 × 40 points and DOS 858.

00H to 1FH are control code and not available.

[ESC+RG] Multiple Language

Hexadecimal code	ESC	RG	Parameter
	<1B>$_{16}$	<52>$_{16}$<47>$_{16}$	a,b,c,ddd,eee,ffff…fff
Initial value [aa]	None		

Valid range and term of command	When the power is OFF	The set parameter is not maintained.
	Valid range within items	The set parameter becomes invalid.
	Valid range between items	The set parameter becomes invalid.

[Function]

Printing multiple language fonts.

[Format]

<RG>a,b,c,ddd,eee,ffff…fff

[Parameter]

a : [Character code]
Character code of print data to be specified to a parameter f.
Refer to the table below.
b : [Font set] Font type for printing. Refer to the table below.
c : [Modification]
0: Standard
1: Italic
2: BOLD
3: BOLD+Italic
d : [Width]
Valid range: 20 to 999 (dots)
Valid range: P09 to P99 (points)
e : [Height]
Valid range: 20 to 999 (dots)
Valid range: P09 to P99 (points)
*One point is 0.35 mm.
f : [Print data] (character code)

[Character code list]

Parameter a	Character code
0	UNICODE(UTF-8)
1	UNICODE (UTF-16BE) *Recommended
2	S-JIS
3	BIG5
4	GB18030
5	KSX 1001 (EUC-KR)
-	Character set specified by <CE> * If UTF-8 or X201 has been selected by <CE>, it is the value of the following. <CE>: UTF-8, <RG> Parameter a: 0:UTF-8

Parameter a	Character code
	<CE>: X201, <RG> Parameter a: 2:UTF-8

[Font set list]

Parameter b	Font name	Font set	Font type	Character code range (UTF-16BE)
0	SATO Hebe Sans	WGL4	Hebe Serif	0020-FB02
1	SATO Hebe Sans Arabic	Arabic(Farsi) +ISO8859-1	Hebe Serif	0020-00FF, 0600-06FF, FE70-FEFC
2	SATO Hebe Sans Thai	Thai+ISO8859-1	Hebe Serif	0020-00FF, 0E01-0E5B
3	SATO Hebe Sans Hindi	Hindi+ISO8859-1	Hebe Serif	0020-00FF, 0901-097F
4	SATO Gothic Tradional Chinese	WGL4	Hebe Serif	0020-FFE6
		BIG5	MobileGothic	
		GB-18030	Crystalzhonghei	
		JISx0208(+NEC) JISx0201	MobileGothic	
		KSX 1001	MobileGothic	
5	SATO Gothic Japanese	WGL4	Hebe Serif	0020-FFE6
		JISx0208(+NEC) JISx0201	MobileGothic	
		KSX 1001	MobileGothic	
		GB-18030	Crystalzhonghei	
		BIG5	MobileGothic	
6	SATO Gothic Simplified Chinese	WGL4	Hebe Serif	0020-FFE5
		GB-18030	Crystalzhonghei	
7	SATO Gothic Korean	WGL4	Hebe Serif	0020-FFE6
		KSX 1001	MobileGothic	
		JISx0208(+NEC) JISx0201	MobileGothic	
		GB-18030	Crystalzhonghei	
		BIG5	MobileGothic	
8	SATO Silver Serif	WGL4	Silver Serif	0020-FB02
9	SATO Mincho Tradional Chinese	WGL4	Silver Serif	0020-FFE6
		BIG5	Mincho	
		GB-18030	Shusong2M	
		JISx0208(+NEC) JISx0201	CrystalMincho	
		KSX 1001	Mincho	
10	SATO Mincho Japanese	WGL4	Silver Serif	0020-FFE6
		JISx0208(+NEC) JISx0201	CrystalMincho	

Parameter b	Font name	Font set	Font type	Character code range (UTF-16BE)
		KSX 1001	Mincho	
		GB-18030	Shusong2M	
		BIG5	Mincho	
11	SATO Mincho Simplified Chinese	WGL4	Silver Serif	0020-FFE5
		GB-18030	Shusong2M	
12	SATO Mincho Korean	WGL4	Silver Serif	0020-FFE6
		KSX 1001	Mincho	
		JISx0208(+NEC) JISx0201	CrystalMincho	
		GB-18030	Shusong2M	
		BIG5	Mincho	
13	SATO Roman Arabic	Arabic+ISO8859-1	Roman	0020-00FF, 0600-06FF, FDF2, FE70-FEFC
14	SATO Hebe Sans Hebrew	Hebrew+ISO8859-1	Hebe Serif	0020-00FF, 05B0-05F4, FB1D-FB4F

[Coding Example]

Character code = UTF16, Font set = SJIS, Modification = Standard, Width = 20 dots, Height = 20 dots, Print data = S A T O

<A>
<V>100<H>100<P>2
<RG>1,5,0,20,20,<FF33>$_{16}$<FF21>$_{16}$<FF34>$_{16}$<FF2F>$_{16}$
<Q>2
<Z>

[Supplementary Explanation]

- When a character code other than UTF-16BE is specified, the character code will be converted into UTF-16BE. If there were codes that cannot be converted, they are replaced by single spaces.
- When UTF-16BE is specified as a character code or character codes do not exist in the font set after UTF-16BE conversion, these character codes are not printed. When a space or a square are filled in the font set for the character code, these images are printed.
- Print size may be smaller than specified character size with parameter in landscape and portrait directions due to multi languages.
- If input code is set to UTF-8, the size of character code is available up to 4 bytes. UTF-8 does not support 5, 6 bytes.
- If input code is set to UTF-16BE, the size of character code is available up to 2 bytes. UTF-16BE does not support 3, 4 bytes.
- Complex script languages (Arabic, Hindi, Thai), Hebrew are printed with proportional fonts, regardless of setting of font type in order to use the formatter function and the combined font function.
- The linefeed code cannot be inserted among one word or one character code forming one character for the complex script languages (Arabic, Hindi, Thai), Hebrew. If the linefeed is inserted, the rendering result is not guaranteed.

- Comply with Unicode 2.1 (note that if the first byte is 0x1b when UTF-16BE is specified, it is judged as a ESC code).
- When performing sequential number printing in Arabic, Hindi, Thai and Hebrew, the character codes are rendered as a character string and it may not function properly.
- This command does not support partial editing because the complex script languages (Arabic, Hindi, Thai), Hebrew extract the character string for using the formatter function and the combined font function.
- Complex script languages (Arabic, Hindi, Thai), Hebrew render character codes as character strings in order to use the formatter function and the combined font function. Other languages render character codes in character units, so that a gap between fonts is different from that of the complex script languages.
- Note that when a combination of character codes and font sets is other than below table, the expected character may not be printed.

Font set	Character code
WGL4, Arabic, Thai, Hindi, Hebrew	UNICODE (UTF-16BE), UNICODE (UTF-8)
Big5	UNICODE (UTF-16BE), BIG5, UNICODE (UTF-8)
SJIS	UNICODE (UTF-16BE), SJIS , UNICODE (UTF-8)
GB18030	UNICODE (UTF-16BE), GB18030, UNICODE (UTF-8)
KSX1001 (EUC-KR)	UNICODE (UTF-16BE), KSX1001 (EUC-KR), UNICODE(UTF-8)

- SATO Roman Arabic does not correspond to Farsi.
- Recommended fonts if you specify "-" in parameter a and print character set of <CE>

<CE>		<RG>	
Parameter a	Official name	Parameter b	Font name
858	DOS 858	0	SATO Hebe Sans
88591	ISO 8859/1	8	SATO Silver Serif
88592	ISO 8859/2		
88599	ISO 8859/9		
850	DOS 850		
852	DOS 852		
855	DOS 855		
857	DOS 857		
737	DOS 737		
866	DOS 866		
1250	Win 1250		
1251	Win 1251		
1252	Win 1252		
1253	Win 1253		
1254	Win 1254		
1257	Win 1257		
869	IBM 869		
UTF-8	UTF-8		
201	X0201	5	SATO Gothic Japanese

<CE>		<RG>	
Parameter a	**Official name**	**Parameter b**	**Font name**
		10	SATO Mincho Japanese

[Valid Commands]

Print position	<V>	<H>								
Modification	<P>	<%>	<F>	<PS>	<PR>					

Multiple language sample

b	Fontname	Sample
0	SATO Hebe Sans	This is a fontsample.
8	SATO Silver Serif	This is a fontsample.
1	SATO Hebe Sans Arabic	هذا هو عينة من الخط.
13	SATO Roman Arabic	هذا هو عينة من الخط.
2	SATO Hebe Sans Thai	นี้คือตัวอย่างของตัวอักษร
3	SATO Hebe Sans Hindi	इस फॉन्ट का एक नमूना है.
14	SATO Hebe Sans Hebrew	זוהי דוגמא של הגופן.
4	SATO Gothic Tradional Chinese	這是字體的樣本。
9	SATO Mincho Tradional Chinese	這是字體的樣本。
6	SATO Gothic Simplified Chinese	这是字体的样本。
11	SATO Mincho Simplified Chinese	这是字体的样本。
5	SATO Gothic Japanese	これはフォントのサンプルです。
10	SATO Mincho Japanese	これはフォントのサンプルです。
7	SATO Gothic Korean	이것은 글꼴의 샘플입니다.
12	SATO Mincho Korean	이것은 글꼴의 샘플입니다.

The print sample shown above is issued with a head density of 8 dots/mm and 28 x 28 point. (vertical/horizontal).

[ESC+RH] Scalable Font

Hexadecimal code	ESC	RH	Parameter
	<1B>$_{16}$	<52>$_{16}$<47>$_{16}$	a,b…b,c,ddd,eee,f…f
Initial value [aa]	None		

Valid range and term of command	When the power is OFF	The set parameter is not maintained.
	Valid range within items	The set parameter becomes invalid.
	Valid range between items	The set parameter becomes invalid.

[Function]

Built-in scalable font and the TTF font downloaded using file download [DC2]DE of a common command are printed.

[Format]

<RH>a,b…b,c,ddd,eee, ffff…fff

[Parameter]

a [Character code]
Input character code of printing data specifying to parameter f.
See the table "Input character code list" below
b [Font set] = Valid range: See the table "Built-in font set list" below.
c [Modification]
0 : Standard
1 : Bold
2 : Italic
3 : Bold + Italic
d [Width]
Valid range : 020 to 999 (dots)
Valid range : P09 to P99 (points)
e [Height]
Valid range : 020 to 999 (dots)
Valid range : P09 to P99 (points)
*One point is 0.35 mm.
*The valid range of height and width is 832 dots for 203 dpi.
f [Print Data] = Data

[Character code list]

Parameter a	Character code
0	UNICODE(UTF-8)
1	UNICODE (UTF-16BE) *Recommended
2	S-JIS
3	BIG5
4	GB18030
5	KSX 1001 (EUC-KR)
-	Character set specified by <CE> * If UTF-8 or X201 has been selected by <CE>, it is the value of the following. <CE>: UTF-8, <RH> Parameter a: 0:UTF-8

Parameter a	Character code
	<CE>: X201, <RH> Parameter a: 2:UTF-8

[Built-in font set list]

Parameter b	Character code
SATOCGSleek.ttf	SATO CG Sleek
SATOCGStream.ttf	SATO CG Stream
SATOOCRA.ttf	SATO OCR-A
SATO0.ttf	SATO 0
SATOALPHABC.ttf	SATO Alpha Bold Condensed
SATOBETABI.ttf	SATO Beta Bold Italic
SATOFOLIOB.ttf	SATO Folio Bold
SATOFUTURAMC.ttf	SATO Futura Medium Condensed
SATOGAMMA.ttf	SATO Gamma
SATOOCRB.ttf	SATO OCR-B
SATOSANS.ttf	SATO Sans
SATOSERIF.ttf	SATO Serif
SATOSYM.ttf	SATO Symbol Set
SATOVICA.ttf	SATO Vica
SATOWING.ttf	SATO WingBats

[Coding Example 1] Printing of the built-in (scalable) font

Character code = UTF16BE, Font set = SATO CG Stream, Modification = Standard, Width = 20 dots, Height = 20 dots, Print data = S A T O

<A>
<V>100<H>100<P>2
<RH>1,SATOCGStream.ttf,0,20,20,<FF33>$_{16}$<FF21>$_{16}$<FF34>$_{16}$<FF2F>$_{16}$
<Q>2
<Z>

[Coding Example 2] Printing of the downloaded TrueType font

Character code = UTF16BE, Font set (The downloaded file name) = sample.ttf, Modification = Standard, Width = 40 dots, Height = 40 dots, Print data = S A T O

<A>
<V>100<H>100<P>2
<RH>1,sample.ttf,0,40,40,<FF33>$_{16}$<FF21>$_{16}$<FF34>$_{16}$<FF2F>$_{16}$
<Q>2
<Z>

[Coding Example 3] Printing of the downloaded TrueType font

Character code = UTF16BE, Font set (The downloaded file name) = sample.TTF, Modification = Standard, Width = 40 dots, Height = 40 dots, Print data = S A T O

<A>
<V>100<H>100<P>2
<RH>1,sample.TTF,0,40,40,<FF33>$_{16}$<FF21>$_{16}$<FF34>$_{16}$<FF2F>$_{16}$
<Q>2
<Z>

[Supplementary Explanation]

- When a character code other than UTF-16 is specified, the character code will be converted into UTF-16. If there are character codes that cannot be converted, all character strings specified as a parameter error will be printed.
- If the font corresponding to specified character code does not exist, an invalid image defined in the font set will be printed.
- Supports only the TTF that supports Unicode (UTF-16BE). If TTF does not support Unicode (UTF-16BE), the specified character code is printed as GID (Glyph Index).
- Recommended fonts if you specify "-" in parameter a and print character set of <CE>

<CE>		<RH>	
Parameter a	**Official name**	**Parameter b**	**Font name**
858	DOS 858	SATOCGSleek.ttf SATOCGStream.ttf	SATO CG Sleek SATO CG Stream
88591	ISO 8859/1		
88592	ISO 8859/2		
88599	ISO 8859/9		
850	DOS 850		
852	DOS 852		
855	DOS 855		
857	DOS 857		
737	DOS 737		
866	DOS 866		
1250	Win 1250		
1251	Win 1251		
1252	Win 1252		
1253	Win 1253		
1254	Win 1254		
1257	Win 1257		
869	IBM 869		
UTF-8	UTF-8		
201	X0201	-	-

- Size that can be specified in the "character set" is up to 32 bytes. Also, you can specify character will be only the following characters.
  - Alphabet
  - Numeric
  - Hyphen ("-")
  - Underscore ("_")
  - Period (".")
- Character may not be printed correctly if small character size is specified to downloaded TTF font. Please fully check on print result.
- Print size may be smaller than specified character size with parameter in landscape and portrait directions due to multi languages.
- If input code is set to UTF-8, the size of character code is available up to 4 bytes. UTF-8 does not support 5, 6 bytes.

- Complex script languages (Arabic, Hindi, Thai), Hebrew are printed with proportional fonts, regardless of setting of font type in order to use formatter function and ligature function.
- The linefeed code cannot be inserted among one word or one character code forming one character for the complex script languages (Arabic, Hindi, Thai), Hebrew. If the linefeed is inserted, the rendering result is not guaranteed.
- Note that if the first byte is 0x1b when UTF-16BE is specified, it is judged as a ESC code.
- If the first two bytes are specified to range of surrogate pairs (0xD800 to 0xDBFF) when UTF-16BE is specified, it will be replaced with half size space on the condition that the last two bytes are not within the range of surrogate pairs (0xDC00 to 0xDFFF).
- When performing sequential number printing in Arabic, Hindi, Thai and Hebrew, the character codes are rendered as a character string and it may not function properly.
- Complex script languages (Arabic, Hindi, Thai), Hebrew render character codes as character strings in order to use formatter function and ligature function. Other languages render character codes in character units, so that a gap between fonts is different from that of the complex script languages.
- Note that when a combination of character codes and font sets is other than below table, the expected character may not be printed.

Font set	Character code
WGL4, Arabic, Thai, Hindi, Hebrew	UNICODE (UTF-16BE), UNICODE (UTF-8)
BIG5	UNICODE (UTF-16BE), BIG5, UNICODE (UTF-8)
SJIS	UNICODE (UTF-16BE), SJIS , UNICODE (UTF-8)
GB18030	UNICODE (UTF-16BE), GB18030, UNICODE (UTF-8)
KSX1001 (EUC-KR)	UNICODE (UTF-16BE), KSX1001 (EUC-KR), UNICODE(UTF-8)

[Valid Commands]

Print position	<V>	<H>								
Modification	<P>	<%>	<F>	<PS>	<PR>					

Scalable font sample

Fontname	Sample
SATOCGSleek.ttf	ABCXYZabcxyz123
SATOCGStream.ttf	ABCXYZabcxyz123
SATOOCRA.ttf	ABCXYZabcxyz123
SATO0.ttf	ABCXYZabcxyz123
SATOALPHABC.ttf	ABCXYZabcxyz123
SATOBETABI.ttf	*ABCXYZabcxyz123*
SATOFOLIOB.ttf	**ABCXYZabcxyz123**
SATOFUTURAMC.ttf	ABCXYZabcxyz123
SATOGAMMA.ttf	ABCXYZabcxyz123
SATOOCRB.ttf	ABCXYZabcxyz123
SATOSANS.ttf	ABCXYZabcxyz123
SATOSERIF.ttf	ABCXYZabcxyz123
SATOSYM.ttf	f/…√∞¬ΗΘΙηθι678
SATOVICA.ttf	ABCXYZabcxyz123
SATOWING.ttf	✌☜☞✠✡☪♋♌♍☒⌂⌘🗁🗎🗏

The print sample shown above is issued with a head density of 8 dots/mm and 30×30 point. (vertical/horizontal).

[ESC+K1] 16 x 16 dots Kanji in Horizontal Line

Hexadecimal code	ESC	K1	Parameter
	<1B>$_{16}$	<4B>$_{16}$<31>$_{16}$	an...n
Initial value	None		

Valid range and term of command	When the power is OFF	The set parameter is not maintained.
	Valid range within items	The set parameter becomes invalid.
	Valid range between items	The set parameter becomes invalid.

[Function]

Specifying 16 x 16 (width x height) dots horizontal written Kanji character print.

[Format]

<K1>an...n

- Parameter

a [Kanji selection mode]
H: HEX characters
B: Binary code
I: HEX characters, smoothing function
C: Binary code, smoothing function
J: HEX characters, highlighting function
D: Binary code, highlighting function
K: HEX characters, smoothing and highlighting function
E: Binary code, smoothing and highlighting function

n [Data] = Print data. Refer to Kanji code (ESC+KC) command for the available character codes.

[Coding Example 1]

Shift JIS HEX characters, Horizontal enlargement ratio: 3, Vertical enlargement ratio: 5

```
<A>
<KC>1
<V>100<H>200<P>2<L>0305
<K1>H81698A94816A83548367815B
<Q>2
<Z>
```

[Coding Example 2]

JIS binary code, Horizontal enlargement ratio: 2, Vertical enlargement ratio: 3

```
<A>
<KC>0
<V>100<H>200<P>2<L>0203
<K1>B! J3T! K%5%H! <
<Q>2
<Z>
```

[Supplementary Explanation]

- HEX characters = Kanji Code 4 bytes ASCII / 1 Kanji character (Ex.Shift JIS code)
- Binary code = Kanji Code 2 bytes / 1 Kanji character (Ex.Shift JIS code)
- Smoothing function validity range = Horizontal/vertical valid range: factor 3 to 12
- Highlighting function validity range = Horizontal/vertical valid range: factor 1 to 5
- When the language setting of this product is Japanese or Simplified Chinese or Traditional Chinese or Korean, printing follows the language setting.
- Some JIS213 Kanji (JISX213) characters have values between U+10000 to U+10FFFF.

  Both UTF-8 and UTF-16 encodings are supported. Characters are encoded as surrogate pairs in UTF-16, and as a 4 byte code in UTF-8. Some encoding processes use CESU-8, which converts a surrogate pair to UTF-8.

[Points]

- With the highlighting function the character width enlarges proportional with the expansion factor.
- Using the highlighting function, depending on the type of font, characters become squeezed.
- When the Kanji mode is set to [China, Traditional Chinese (BIG5)], it will be a command error.

[Valid Commands]

Print Position	<V>	<H>								
Modification	<P>	<L>	<%>	<&>	</>	<0>	<WD>			

[ESC+K2] 24 x 24 dots Kanji in Horizontal Line

Hexadecimal code	ESC	K2	Parameter
	<1B>$_{16}$	<4B>$_{16}$<32>$_{16}$	an...n
Initial value	None		

Valid range and term of command	When the power is OFF	The set parameter is not maintained.
	Valid range within items	The set parameter becomes invalid.
	Valid range between items	The set parameter becomes invalid.

[Function]

Specifying 24 x 24 (width x height) dots horizontal written Kanji character print.

[Format]

<K2>an...n

- Parameter

a [Kanji selection mode]
H: HEX characters
B: Binary code
I: HEX characters, smoothing function
C: Binary code, smoothing function
J: HEX characters, highlighting function
D: Binary code, highlighting function
K: HEX characters, smoothing and highlighting function
E: Binary code, smoothing and highlighting function

n [Data] = Print data. Refer to Kanji code (ESC+KC) command for the available character codes.

[Coding Example 1]

Shift JIS HEX characters, Horizontal enlargement ratio: 3, Vertical enlargement ratio: 5

<A>
<KC>1
<V>100<H>200<P>2<L>0305
<K2>H81698A94816A83548367815B
<Q>2
<Z>

[Coding Example 2]

JIS binary code, Horizontal enlargement ratio: 2, Vertical enlargement ratio: 3

<A>
<KC>0
<V>100<H>200<P>2<L>0203
<K2>B! J3T! K%5%H! <
<Q>2
<Z>

[Supplementary Explanation]

- HEX characters = Kanji Code 4 bytes ASCII / 1 Kanji character (Ex.Shift JIS code)
- Binary code = Kanji Code 2 bytes / 1 Kanji character (Ex.Shift JIS code)
- Smoothing function validity range = Horizontal/vertical valid range: factor 3 to 12
- Highlighting function validity range = Horizontal/vertical valid range: factor 1 to 5
- When the language setting of this product is Japanese or Simplified Chinese or Traditional Chinese or Korean, printing follows the language setting.
- Some JIS213 Kanji (JISX213) characters have values between U+10000 to U+10FFFF.

  Both UTF-8 and UTF-16 encodings are supported. Characters are encoded as surrogate pairs in UTF-16, and as a 4 byte code in UTF-8. Some encoding processes use CESU-8, which converts a surrogate pair to UTF-8.

[Points]

- With the highlighting function the character width enlarges proportional with the expansion factor.
- Using the highlighting function, depending on the type of font, characters become squeezed.

[Valid Commands]

Print Position	<V>	<H>								
Modification	<P>	<L>	<%>	<&>	</>	<0>	<WD>			

[ESC+K3] 22 x 22 dots Kanji in Horizontal Line

Hexadecimal code	ESC	K3	Parameter
	<1B>$_{16}$	<4B>$_{16}$<33>$_{16}$	an...n
Initial value	None		

Valid range and term of command	When the power is OFF	The set parameter is not maintained.
	Valid range within items	The set parameter becomes invalid.
	Valid range between items	The set parameter becomes invalid.

[Function]

Specifying 22 x 22 (width x height) dots horizontal written Kanji character print.

[Format]

<K3>an...n

- Parameter

a [Kanji selection mode]
H: HEX characters
B: Binary code
I: HEX characters, smoothing function
C: Binary code, smoothing function
J: HEX characters, highlighting function
D: Binary code, highlighting function
K: HEX characters, smoothing and highlighting function
E: Binary code, smoothing and highlighting function

n [Data] = Print data. Refer to Kanji code (ESC+KC) command for the available character codes.

[Coding Example 1]

Shift JIS HEX characters, Horizontal enlargement ratio: 3, Vertical enlargement ratio: 5

```
<A>
<KC>1
<V>100<H>200<P>2<L>0305
<K3>H81698A94816A83548367815B
<Q>2
<Z>
```

[Coding Example 2]

JIS binary code, Horizontal enlargement ratio: 2, Vertical enlargement ratio: 3

```
<A>
<KC>0
<V>100<H>200<P>2<L>0203
<K3>B! J3T! K%5%H! <
<Q>2
<Z>
```

[Supplementary Explanation]

- HEX characters = Kanji Code 4 bytes ASCII / 1 Kanji character (Ex.Shift JIS code)
- Binary code = Kanji Code 2 bytes / 1 Kanji character (Ex.Shift JIS code)
- Smoothing function validity range = Horizontal/vertical valid range: factor 3 to 12
- Highlighting function validity range = Horizontal/vertical valid range: factor 1 to 5
- Some JIS213 Kanji (JISX213) characters have values between U+10000 to U+10FFFF.

  Both UTF-8 and UTF-16 encodings are supported. Characters are encoded as surrogate pairs in UTF-16, and as a 4 byte code in UTF-8. Some encoding processes use CESU-8, which converts a surrogate pair to UTF-8.

[Points]

- With the highlighting function the character width enlarges proportional with the expansion factor.
- Using the highlighting function, depending on the type of font, characters become squeezed.
- When the Kanji mode setting is [Japan, Compatible Kanji] or [China, Simplified Chinese (GB18030)] or [China, Traditional Chinese (BIG5)] or [Korean (KSX1001)], it will be a command error.

[Valid Commands]

Print Position	<V>	<H>								
Modification	<P>	<L>	<%>	<&>	</>	<0>	<WD>			

[ESC+K4] 32 x 32 dots Kanji in Horizontal Line

Hexadecimal code	ESC	K4	Parameter
	<1B>$_{16}$	<4B>$_{16}$<34>$_{16}$	an...n
Initial value	None		

Valid range and term of command	When the power is OFF	The set parameter is not maintained.
	Valid range within items	The set parameter becomes invalid.
	Valid range between items	The set parameter becomes invalid.

[Function]

Specifying 32 x 32 (width x height) dots horizontal written Kanji character print.

[Format]

<K4>an...n

- Parameter

a [Kanji selection mode]
H: HEX characters
B: Binary code
I: HEX characters, smoothing function
C: Binary code, smoothing function
J: HEX characters, highlighting function
D: Binary code, highlighting function
K: HEX characters, smoothing and highlighting function
E: Binary code, smoothing and highlighting function

n [Data] = Print data. Refer to Kanji code (ESC+KC) command for the available character codes.

[Coding Example 1]

Shift JIS HEX characters, Horizontal enlargement ratio: 3, Vertical enlargement ratio: 5

<A>
<KC>1
<V>100<H>200<P>2<L>0305
<K4>H81698A94816A83548367815B
<Q>2
<Z>

[Coding Example 2]

JIS binary code, Horizontal enlargement ratio: 2, Vertical enlargement ratio: 3

<A>
<KC>0
<V>100<H>200<P>2<L>0203
<K4>B! J3T! K%5%H! <
<Q>2
<Z>

[Supplementary Explanation]

- HEX characters = Kanji Code 4 bytes ASCII / 1 Kanji character (Ex.Shift JIS code)
- Binary code = Kanji Code 2 bytes / 1 Kanji character (Ex.Shift JIS code)
- Smoothing function validity range = Horizontal/vertical valid range: factor 3 to 12
- Highlighting function validity range = Horizontal/vertical valid range: factor 1 to 5
- Some JIS213 Kanji (JISX213) characters have values between U+10000 to U+10FFFF.

  Both UTF-8 and UTF-16 encodings are supported. Characters are encoded as surrogate pairs in UTF-16, and as a 4 byte code in UTF-8. Some encoding processes use CESU-8, which converts a surrogate pair to UTF-8.

[Points]

- With the highlighting function the character width enlarges proportional with the expansion factor.
- Using the highlighting function, depending on the type of font, characters become squeezed.
- When the Kanji mode setting is [Japan, Compatible Kanji] or [China, Simplified Chinese (GB18030)] or [China, Traditional Chinese (BIG5)] or [Korean (KSX1001)], it will be a command error.

[Valid Commands]

Print Position	<V>	<H>								
Modification	<P>	<L>	<%>	<&>	</>	<0>	<WD>			

[ESC+K5] 40 x 40 dots Kanji in Horizontal Line

Hexadecimal code	ESC	K5	Parameter
	<1B>$_{16}$	<4B>$_{16}$<35>$_{16}$	an...n
Initial value	None		

Valid range and term of command	When the power is OFF	The set parameter is not maintained.
	Valid range within items	The set parameter becomes invalid.
	Valid range between items	The set parameter becomes invalid.

[Function]

Specifying 40 x 40 (width x height) dots horizontal written Kanji character print.

[Format]

<K5>an...n

- Parameter

a [Kanji selection mode]
H: HEX characters
B: Binary code
I: HEX characters, smoothing function
C: Binary code, smoothing function
J: HEX characters, highlighting function
D: Binary code, highlighting function
K: HEX characters, smoothing and highlighting function
E: Binary code, smoothing and highlighting function

n [Data] = Print data. Refer to Kanji code (ESC+KC) command for the available character codes.

[Coding Example 1]

Shift JIS HEX characters, Horizontal enlargement ratio: 3, Vertical enlargement ratio: 5

```
<A>
<KC>1
<V>100<H>200<P>2<L>0305
<K5>H81698A94816A83548367815B
<Q>2
<Z>
```

[Coding Example 2]

JIS binary code, Horizontal enlargement ratio: 2, Vertical enlargement ratio: 3

```
<A>
<KC>0
<V>100<H>200<P>2<L>0203
<K5>B! J3T! K%5%H! <
<Q>2
<Z>
```

[Supplementary Explanation]

- HEX characters = Kanji Code 4 bytes ASCII / 1 Kanji character (Ex.Shift JIS code)
- Binary code = Kanji Code 2 bytes / 1 Kanji character (Ex.Shift JIS code)
- Smoothing function validity range = Horizontal/vertical valid range: factor 3 to 12
- Highlighting function validity range = Horizontal/vertical valid range: factor 1 to 5
- Some JIS213 Kanji (JISX213) characters have values between U+10000 to U+10FFFF.

  Both UTF-8 and UTF-16 encodings are supported. Characters are encoded as surrogate pairs in UTF-16, and as a 4 byte code in UTF-8. Some encoding processes use CESU-8, which converts a surrogate pair to UTF-8.

[Points]

- With the highlighting function the character width enlarges proportional with the expansion factor.
- Using the highlighting function, depending on the type of font, characters become squeezed.
- When the Kanji mode setting is [Japan, Compatible Kanji] or [China, Simplified Chinese (GB18030)] or [China, Traditional Chinese (BIG5)] or [Korean (KSX1001)], it will be a command error.

[Valid Commands]

Print Position	<V>	<H>								
Modification	<P>	<L>	<%>	<&>	</>	<0>	<WD>			

[ESC+K8] 16 x 16 dots Kanji in Horizontal Line with 1-byte Character

Hexadecimal code	ESC	K8	Parameter
	<1B>$_{16}$	<4B>$_{16}$<38>$_{16}$	an...n
Initial value	None		

Valid range and term of command	When the power is OFF	The set parameter is not maintained.
	Valid range within items	The set parameter becomes invalid.
	Valid range between items	The set parameter becomes invalid.

[Function]

Specifying 16 x 16 (width x height) dots horizontal written Kanji character print and W8 x H16 dots half size character in horizontal line.

[Format]

<K8>an...n

- Parameter

a [Kanji selection mode]
H: HEX characters
B: Binary code
I: HEX characters, smoothing function
C: Binary code, smoothing function
J: HEX characters, highlighting function
D: Binary code, highlighting function
K: HEX characters, smoothing and highlighting function
E: Binary code, smoothing and highlighting function
n [Data] = Print data. Refer to Kanji code (ESC+KC) command for the available character codes.

[Coding Example]

Shift JIS HEX characters, Data: 株式会社ｻﾄｰ

<A>
<KC>1
<V>100<H>200<P>2<L>0305
<K8>H8A948EAE89EF8ED0BBC4B0
<Q>2
<Z>

[Supplementary Explanation]

- HEX characters = Kanji Code 4 bytes ASCII / 1 Kanji character (Ex.Shift JIS code)
- Binary code = Kanji Code 2 bytes / 1 Kanji character (Ex.Shift JIS code)
- Smoothing function validity range = Horizontal/vertical valid range: factor 3 to 12
- Highlighting function validity range = Horizontal/vertical valid range: factor 1 to 5
- Some JIS213 Kanji (JISX213) characters have values between U+10000 to U+10FFFF.

  Both UTF-8 and UTF-16 encodings are supported. Characters are encoded as surrogate pairs in UTF-16, and as a 4 byte code in UTF-8. Some encoding processes use CESU-8, which converts a surrogate pair to UTF-8.

[Points]

- With the highlighting function the character width enlarges proportional with the expansion factor.
- Using the highlighting function, depending on the type of font, characters become squeezed.
- This command is not available for JIS code print data.
- For the half size character (1-byte character code), printing will be performed in W8 x H16 dots.
- For the full size character (2-byte character code), printing will be performed in W16 x H16 dots.
- When the Kanji mode is set to [China, Traditional Chinese (BIG5)], it will be a command error.

[Valid Commands]

Print Position	<V>	<H>								
Modification	<P>	<L>	<%>	<&>	</>	<0>	<WD>			

[ESC+K9] 24 x 24 dots Kanji in Horizontal Line with 1-byte Character

Hexadecimal code	ESC	K9	Parameter
	<1B>$_{16}$	<4B>$_{16}$<39>$_{16}$	an...n
Initial value	None		

Valid range and term of command	When the power is OFF	The set parameter is not maintained.
	Valid range within items	The set parameter becomes invalid.
	Valid range between items	The set parameter becomes invalid.

[Function]

Specifying 24 x 24 (width x height) dots horizontal written Kanji character print and W12 x H24 dots half size character in horizontal line.

[Format]

<K9>an...n

- Parameter

a [Kanji selection mode]
H: HEX characters
B: Binary code
I: HEX characters, smoothing function
C: Binary code, smoothing function
J: HEX characters, highlighting function
D: Binary code, highlighting function
K: HEX characters, smoothing and highlighting function
E: Binary code, smoothing and highlighting function
n [Data] = Print data. Refer to Kanji code (ESC+KC) command for the available character codes.

[Coding Example]

Shift JIS HEX characters, Data: 株式会社ｻﾄｰ

<A>
<KC>1
<V>100<H>200<P>2<L>0305
<K9>H8A948EAE89EF8ED0BBC4B0
<Q>2
<Z>

[Supplementary Explanation]

- HEX characters = Kanji Code 4 bytes ASCII / 1 Kanji character (Ex.Shift JIS code)
- Binary code = Kanji Code 2 bytes / 1 Kanji character (Ex.Shift JIS code)
- Smoothing function validity range = Horizontal/vertical valid range: factor 3 to 12
- Highlighting function validity range = Horizontal/vertical valid range: factor 1 to 5
- Some JIS213 Kanji (JISX213) characters have values between U+10000 to U+10FFFF.

  Both UTF-8 and UTF-16 encodings are supported. Characters are encoded as surrogate pairs in UTF-16, and as a 4 byte code in UTF-8. Some encoding processes use CESU-8, which converts a surrogate pair to UTF-8.

[Points]

- With the highlighting function the character width enlarges proportional with the expansion factor.
- Using the highlighting function, depending on the type of font, characters become squeezed.
- This command is not available for JIS code print data.
- For the half size character (1-byte character code), printing will be performed in W12 x H24 dots.
- For the full size character (2-byte character code), printing will be performed in W24 x H24 dots.

[Valid Commands]

Print Position	<V>	<H>								
Modification	<P>	<L>	<%>	<&>	</>	<0>	<WD>			

[ESC+KA] 22 x 22 dots Kanji in Horizontal Line with 1-byte Character

Hexadecimal code	ESC	KA	Parameter
	$<1B>_{16}$	$<4B>_{16}<41>_{16}$	an...n
Initial value	Shift-JIS		

Valid range and term of command	When the power is OFF	The set parameter is not maintained.
	Valid range within items	The set parameter becomes invalid.
	Valid range between items	The set parameter becomes invalid.

[Function]

Specifying 22 x 22 (width x height) dots horizontal written Kanji character print and W11 x H22 dots half size character in horizontal line.

[Format]

<KA>an...n

- Parameter

a [Kanji selection mode]
H: HEX characters
B: Binary code
I: HEX characters, smoothing function
C: Binary code, smoothing function
J: HEX characters, highlighting function
D: Binary code, highlighting function
K: HEX characters, smoothing and highlighting function
E: Binary code, smoothing and highlighting function
n [Data] = Print data. Refer to Kanji code (ESC+KC) command for the available character codes.

[Coding Example]

Shift JIS HEX characters, Data: 株式会社ｻﾄｰ

<A>
<KC>1
<V>100<H>200<P>2<L>0305
<CC>0
<u><KA>H8A948EAE89EF8ED0BBC4B0</u>
<Q>2
<Z>

[Supplementary Explanation]

- HEX characters = Kanji Code 4 bytes ASCII / 1 Kanji character (Ex.Shift JIS code)
- Binary code = Kanji Code 2 bytes / 1 Kanji character (Ex.Shift JIS code)
- Smoothing function validity range = Horizontal/vertical valid range: factor 3 to 12
- Highlighting function validity range = Horizontal/vertical valid range: factor 1 to 5
- Some JIS213 Kanji (JISX213) characters have values between U+10000 to U+10FFFF.

  Both UTF-8 and UTF-16 encodings are supported. Characters are encoded as surrogate pairs in UTF-16, and as a 4 byte code in UTF-8. Some encoding processes use CESU-8, which converts a surrogate pair to UTF-8.

[Points]

- With the highlighting function the character width enlarges proportional with the expansion factor.
- Using the highlighting function, depending on the type of font, characters become squeezed.
- This command is not available for JIS code print data.
- For the half size character (1-byte character code), printing will be performed in W11 x H22 dots.
- For the full size character (2-byte character code), printing will be performed in W22 x H22 dots.
- When the Kanji mode setting is [Japan, Compatible Kanji] or [China, Simplified Chinese (GB18030)] or [China, Traditional Chinese (BIG5)] or [Korean (KSX1001)], it will be a command error.

[Valid Commands]

Print Position	<V>	<H>								
Modification	<P>	<L>	<%>	<&>	</>	<0>	<WD>			

[ESC+KB] 32 x 32 dots Kanji in Horizontal Line with 1-byte Character

Hexadecimal code	ESC	KB	Parameter
	$<1B>_{16}$	$<4B>_{16}<42>_{16}$	an...n
Initial value	Shift-JIS		

Valid range and term of command	When the power is OFF	The set parameter is not maintained.
	Valid range within items	The set parameter becomes invalid.
	Valid range between items	The set parameter becomes invalid.

[Function]

Specifying 32 x 32 (width x height) dots horizontal written Kanji character print and W16 x H32 dots half size character in horizontal line.

[Format]

<KB>an...n

- Parameter

a [Kanji selection mode]
H: HEX characters
B: Binary code
I: HEX characters, smoothing function
C: Binary code, smoothing function
J: HEX characters, highlighting function
D: Binary code, highlighting function
K: HEX characters, smoothing and highlighting function
E: Binary code, smoothing and highlighting function
n [Data] = Print data. Refer to Kanji code (ESC+KC) command for the available character codes.

[Coding Example]

Shift JIS HEX characters, Data: 株式会社ｻﾄｰ

<A>
<KC>1
<V>100<H>200<P>2<L>0305
<CC>0
<KB>H8A948EAE89EF8ED0BBC4B0
<Q>2
<Z>

[Supplementary Explanation]

- HEX characters = Kanji Code 4 bytes ASCII / 1 Kanji character (Ex.Shift JIS code)
- Binary code = Kanji Code 2 bytes / 1 Kanji character (Ex.Shift JIS code)
- Smoothing function validity range = Horizontal/vertical valid range: factor 3 to 12
- Highlighting function validity range = Horizontal/vertical valid range: factor 1 to 5
- Some JIS213 Kanji (JISX213) characters have values between U+10000 to U+10FFFF.

  Both UTF-8 and UTF-16 encodings are supported. Characters are encoded as surrogate pairs in UTF-16, and as a 4 byte code in UTF-8. Some encoding processes use CESU-8, which converts a surrogate pair to UTF-8.

[Points]

- With the highlighting function the character width enlarges proportional with the expansion factor.
- Using the highlighting function, depending on the type of font, characters become squeezed.
- For the half size character (1-byte character code), printing will be performed in W16 x H32 dots.
- For the full size character (2-byte character code), printing will be performed in W32 x H32 dots.
- This command is not available for JIS code print data.
- When the Kanji mode setting is [Japan, Compatible Kanji] or [China, Simplified Chinese (GB18030)] or [China, Traditional Chinese (BIG5)] or [Korean (KSX1001)], it will be a command error.

[Valid Commands]

Print Position	<V>	<H>								
Modification	<P>	<L>	<%>	<&>	</>	<0>	<WD>			

[ESC+KD] 40 x 40 dots Kanji in Horizontal Line with 1-byte Character

Hexadecimal code	ESC	KD	Parameter
	<1B>$_{16}$	<4B>$_{16}$<44>$_{16}$	an...n
Initial value	Shift-JIS		

Valid range and term of command	When the power is OFF	The set parameter is not maintained.
	Valid range within items	The set parameter becomes invalid.
	Valid range between items	The set parameter becomes invalid.

[Function]

Specifying 40 x 40 (width x height) dots horizontal written Kanji character print and W20 x H40 dots half size character in horizontal line.

[Format]

<KD>an...n

- Parameter

a [Kanji selection mode]
H: HEX characters
B: Binary code
I: HEX characters, smoothing function
C: Binary code, smoothing function
J: HEX characters, highlighting function
D: Binary code, highlighting function
K: HEX characters, smoothing and highlighting function
E: Binary code, smoothing and highlighting function
n [Data] = Print data. Refer to Kanji code (ESC+KC) command for the available character codes.

[Coding Example]

Shift JIS HEX characters, Data: 株式会社ｻﾄｰ

<A>
<KC>1
<V>100<H>200<P>2<L>0305
<CC>0
<u><KD>H8A948EAE89EF8ED0BBC4B0</u>
<Q>2
<Z>

[Supplementary Explanation]

- HEX characters = Kanji Code 4 bytes ASCII / 1 Kanji character (Ex.Shift JIS code)
- Binary code = Kanji Code 2 bytes / 1 Kanji character (Ex.Shift JIS code)
- Smoothing function validity range = Horizontal/vertical valid range: factor 3 to 12
- Highlighting function validity range = Horizontal/vertical valid range: factor 1 to 5
- Some JIS213 Kanji (JISX213) characters have values between U+10000 to U+10FFFF.

  Both UTF-8 and UTF-16 encodings are supported. Characters are encoded as surrogate pairs in UTF-16, and as a 4 byte code in UTF-8. Some encoding processes use CESU-8, which converts a surrogate pair to UTF-8.

[Points]

- With the highlighting function the character width enlarges proportional with the expansion factor.
- Using the highlighting function, depending on the type of font, characters become squeezed.
- For the half size character (1-byte character code), printing will be performed in W20 x H40 dots.
- For the full size character (2-byte character code), printing will be performed in W40 x H40 dots.
- This command is not available for JIS code print data.
- When the Kanji mode setting is [Japan, Compatible Kanji] or [China, Simplified Chinese (GB18030)] or [China, Traditional Chinese (BIG5)] or [Korean (KSX1001)], it will be a command error.

[Valid Commands]

Print Position	<V>	<H>								
Modification	<P>	<L>	<%>	<&>	</>	<0>	<WD>			

[ESC+k1] 16 x 16 dots Kanji in Vertical Line

Hexadecimal code	ESC	k1	Parameter
	<1B>$_{16}$	<6B>$_{16}$<31>$_{16}$	an...n
Initial value	None		

Valid range and term of command	When the power is OFF	The set parameter is not maintained.
	Valid range within items	The set parameter becomes invalid.
	Valid range between items	The set parameter becomes invalid.

[Function]

Specifying 16 x 16 (width x height) dots vertical written Kanji character print.

[Format]

<k1>an...n

- Parameter

a [Kanji selection mode]
H: HEX characters
B: Binary code
I: HEX characters, smoothing function
C: Binary code, smoothing function
J: HEX characters, highlighting function
D: Binary code, highlighting function
K: HEX characters, smoothing and highlighting function
E: Binary code, smoothing and highlighting function

n [Data] = Print data. Refer to Kanji code (ESC+KC) command for the available character codes.

[Coding Example 1]

Shift JIS HEX characters, Horizontal enlargement ratio: 3, Vertical enlargement ratio: 5

<A>
<KC>1
<V>100<H>200<P>2<L>0305
<k1>H81698A94816A83548367815B
<Q>2
<Z>

[Coding Example 2]

JIS binary code, Horizontal enlargement ratio: 2, Vertical enlargement ratio: 3

<A>
<KC>0
<V>100<H>200<P>2<L>0203
<k1>B! J3T! K%5%H! <
<Q>2
<Z>

[Supplementary Explanation]

- HEX characters = Kanji Code 4 bytes ASCII / 1 Kanji character (Ex.Shift JIS code)
- Binary code = Kanji Code 2 bytes / 1 Kanji character (Ex.Shift JIS code)
- Smoothing function validity range = Horizontal/vertical valid range: factor 3 to 12
- Highlighting function validity range = Horizontal/vertical valid range: factor 1 to 5
- Print result of two bytes under bar "_" is vertical line (excluding when the kanji mode is [Japan, Compatible kanji]).
- When the language setting of this product is Japanese or Simplified Chinese or Traditional Chinese or Korean, printing follows the language setting.
- Some JIS213 Kanji (JISX213) characters have values between U+10000 to U+10FFFF.

  Both UTF-8 and UTF-16 encodings are supported. Characters are encoded as surrogate pairs in UTF-16, and as a 4 byte code in UTF-8. Some encoding processes use CESU-8, which converts a surrogate pair to UTF-8.

[Points]

- With the highlighting function the character width enlarges proportional with the expansion factor.
- Using the highlighting function, depending on the type of font, characters become squeezed.
- When the Kanji mode is set to [China, Traditional Chinese (BIG5)], it will be a command error.

[Valid Commands]

Print Position	<V>	<H>								
Modification	<P>	<L>	<%>	<&>	</>	<0>	<WD>			

[ESC+k2] 24 x 24 dots Kanji in Vertical Line

Hexadecimal code	ESC	k2	Parameter
	<1B>$_{16}$	<6B>$_{16}$<32>$_{16}$	an...n
Initial value	None		

Valid range and term of command	When the power is OFF	The set parameter is not maintained.
	Valid range within items	The set parameter becomes invalid.
	Valid range between items	The set parameter becomes invalid.

[Function]

Specifying 24 x 24 (width x height) dots vertical written Kanji character print.

[Format]

<k2>an...n

- Parameter

a [Kanji selection mode]
H: HEX characters
B: Binary code
I: HEX characters, smoothing function
C: Binary code, smoothing function
J: HEX characters, highlighting function
D: Binary code, highlighting function
K: HEX characters, smoothing and highlighting function
E: Binary code, smoothing and highlighting function

n [Data] = Print data. Refer to Kanji code (ESC+KC) command for the available character codes.

[Coding Example 1]

Shift JIS HEX characters, Horizontal enlargement ratio: 3, Vertical enlargement ratio: 5

<A>
<KC>1
<V>100<H>200<P>2<L>0305
<k2>H81698A94816A83548367815B
<Q>2
<Z>

[Coding Example 2]

JIS binary code, Horizontal enlargement ratio: 2, Vertical enlargement ratio: 3

<A>
<KC>0
<V>100<H>200<P>2<L>0203
<k2>B! J3T! K%5%H! <
<Q>2
<Z>

[Supplementary Explanation]

- HEX characters = Kanji Code 4 bytes ASCII / 1 Kanji character (Ex.Shift JIS code)
- Binary code = Kanji Code 2 bytes / 1 Kanji character (Ex.Shift JIS code)
- Smoothing function validity range = Horizontal/vertical valid range: factor 3 to 12
- Highlighting function validity range = Horizontal/vertical valid range: factor 1 to 5
- Print result of two bytes under bar "_" is vertical line (excluding when the kanji mode is [Japan, Compatible kanji]).
- When the language setting of this product is Japanese or Simplified Chinese or Traditional Chinese or Korean, printing follows the language setting.
- Some JIS213 Kanji (JISX213) characters have values between U+10000 to U+10FFFF.

  Both UTF-8 and UTF-16 encodings are supported. Characters are encoded as surrogate pairs in UTF-16, and as a 4 byte code in UTF-8. Some encoding processes use CESU-8, which converts a surrogate pair to UTF-8.

[Points]

- With the highlighting function the character width enlarges proportional with the expansion factor.
- Using the highlighting function, depending on the type of font, characters become squeezed.

[Valid Commands]

Print Position	<V>	<H>								
Modification	<P>	<L>	<%>	<&>	</>	<0>	<WD>			

[ESC+k3] 22 x 22 dots Kanji in Vertical Line

Hexadecimal code	ESC	k3	Parameter
	<1B>$_{16}$	<6B>$_{16}$<33>$_{16}$	an...n
Initial value	None		

Valid range and term of command	When the power is OFF	The set parameter is not maintained.
	Valid range within items	The set parameter becomes invalid.
	Valid range between items	The set parameter becomes invalid.

[Function]

Specifying 22 x 22 (width x height) dots vertical written Kanji character print.

[Format]

<k3>an...n

- Parameter

a [Kanji selection mode]
H: HEX characters
B: Binary code
I: HEX characters, smoothing function
C: Binary code, smoothing function
J: HEX characters, highlighting function
D: Binary code, highlighting function
K: HEX characters, smoothing and highlighting function
E: Binary code, smoothing and highlighting function

n [Data] = Print data. Refer to Kanji code (ESC+KC) command for the available character codes.

[Coding Example 1]

Shift JIS HEX characters, Horizontal enlargement ratio: 3, Vertical enlargement ratio: 5

<A>
<KC>1
<V>100<H>200<P>2<L>0305
<k3>H81698A94816A83548367815B
<Q>2
<Z>

[Coding Example 2]

JIS binary code, Horizontal enlargement ratio: 2, Vertical enlargement ratio: 3

<A>
<KC>0
<V>100<H>200<P>2<L>0203
<k3>B! J3T! K%5%H! <
<Q>2
<Z>

[Supplementary Explanation]

- HEX characters = Kanji Code 4 bytes ASCII / 1 Kanji character (Ex.Shift JIS code)
- Binary code = Kanji Code 2 bytes / 1 Kanji character (Ex.Shift JIS code)
- Smoothing function validity range = Horizontal/vertical valid range: factor 3 to 12
- Highlighting function validity range = Horizontal/vertical valid range: factor 1 to 5
- Print result of two bytes under bar "_" is vertical line.
- Some JIS213 Kanji (JISX213) characters have values between U+10000 to U+10FFFF.

  Both UTF-8 and UTF-16 encodings are supported. Characters are encoded as surrogate pairs in UTF-16, and as a 4 byte code in UTF-8. Some encoding processes use CESU-8, which converts a surrogate pair to UTF-8.

[Points]

- With the highlighting function the character width enlarges proportional with the expansion factor.
- Using the highlighting function, depending on the type of font, characters become squeezed.
- When the Kanji mode setting is [Japan, Compatible Kanji] or [China, Simplified Chinese (GB18030)] or [China, Traditional Chinese (BIG5)] or [Korean (KSX1001)], it will be a command error.

[Valid Commands]

Print Position	<V>	<H>								
Modification	<P>	<L>	<%>	<&>	</>	<0>	<WD>			

[ESC+k4] 32 x 32 dots Kanji in Vertical Line

Hexadecimal code	ESC	k4	Parameter
	<1B>$_{16}$	<6B>$_{16}$<34>$_{16}$	an...n
Initial value	None		

Valid range and term of command	When the power is OFF	The set parameter is not maintained.
	Valid range within items	The set parameter becomes invalid.
	Valid range between items	The set parameter becomes invalid.

[Function]

Specifying 32 x 32 (width x height) dots vertical written Kanji character print.

[Format]

<k4>an...n

- Parameter

a [Kanji selection mode]
H: HEX characters
B: Binary code
I: HEX characters, smoothing function
C: Binary code, smoothing function
J: HEX characters, highlighting function
D: Binary code, highlighting function
K: HEX characters, smoothing and highlighting function
E: Binary code, smoothing and highlighting function

n [Data] = Print data. Refer to Kanji code (ESC+KC) command for the available character codes.

[Coding Example 1]

Shift JIS HEX characters, Horizontal enlargement ratio: 3, Vertical enlargement ratio: 5

<A>
<KC>1
<V>100<H>200<P>2<L>0305
<k4>H81698A94816A83548367815B
<Q>2
<Z>

[Coding Example 2]

JIS binary code, Horizontal enlargement ratio: 2, Vertical enlargement ratio: 3

<A>
<KC>0
<V>100<H>200<P>2<L>0203
<k4>B! J3T! K%5%H! <
<Q>2
<Z>

[Supplementary Explanation]

- HEX characters = Kanji Code 4 bytes ASCII / 1 Kanji character (Ex.Shift JIS code)
- Binary code = Kanji Code 2 bytes / 1 Kanji character (Ex.Shift JIS code)
- Smoothing function validity range = Horizontal/vertical valid range: factor 3 to 12
- Highlighting function validity range = Horizontal/vertical valid range: factor 1 to 5
- Print result of two bytes under bar "_" is vertical line.
- Some JIS213 Kanji (JISX213) characters have values between U+10000 to U+10FFFF.

  Both UTF-8 and UTF-16 encodings are supported. Characters are encoded as surrogate pairs in UTF-16, and as a 4 byte code in UTF-8. Some encoding processes use CESU-8, which converts a surrogate pair to UTF-8.

[Points]

- With the highlighting function the character width enlarges proportional with the expansion factor.
- Using the highlighting function, depending on the type of font, characters become squeezed.
- When the Kanji mode setting is [Japan, Compatible Kanji] or [China, Simplified Chinese (GB18030)] or [China, Traditional Chinese (BIG5)] or [Korean (KSX1001)], it will be a command error.

[Valid Commands]

Print Position	<V>	<H>								
Modification	<P>	<L>	<%>	<&>	</>	<0>	<WD>			

[ESC+k5] 40 x 40 dots Kanji in Vertical Line

Hexadecimal code	ESC	k5	Parameter
	<1B>$_{16}$	<6B>$_{16}$<35>$_{16}$	an...n
Initial value	None		

Valid range and term of command	When the power is OFF	The set parameter is not maintained.
	Valid range within items	The set parameter becomes invalid.
	Valid range between items	The set parameter becomes invalid.

[Function]

Specifying 40 x 40 (width x height) dots vertical written Kanji character print.

[Format]

<k5>an...n

- Parameter

a [Kanji selection mode]
H: HEX characters
B: Binary code
I: HEX characters, smoothing function
C: Binary code, smoothing function
J: HEX characters, highlighting function
D: Binary code, highlighting function
K: HEX characters, smoothing and highlighting function
E: Binary code, smoothing and highlighting function

n [Data] = Print data. Refer to Kanji code (ESC+KC) command for the available character codes.

[Coding Example 1]

Shift JIS HEX characters, Horizontal enlargement ratio: 3, Vertical enlargement ratio: 5

<A>
<KC>1
<V>100<H>200<P>2<L>0305
<k5>H81698A94816A83548367815B
<Q>2
<Z>

[Coding Example 2]

JIS binary code, Horizontal enlargement ratio: 2, Vertical enlargement ratio: 3

<A>
<KC>0
<V>100<H>100<P>2<L>0203
<k5>B! J3T! K%5%H! <
<Q>2
<Z>

[Supplementary Explanation]

- HEX characters = Kanji Code 4 bytes ASCII / 1 Kanji character (Ex.Shift JIS code)
- Binary code = Kanji Code 2 bytes / 1 Kanji character (Ex.Shift JIS code)
- Smoothing function validity range = Horizontal/vertical valid range: factor 3 to 12
- Highlighting function validity range = Horizontal/vertical valid range: factor 1 to 5
- Print result of two bytes under bar "_" is vertical line.
- Some JIS213 Kanji (JISX213) characters have values between U+10000 to U+10FFFF.

  Both UTF-8 and UTF-16 encodings are supported. Characters are encoded as surrogate pairs in UTF-16, and as a 4 byte code in UTF-8. Some encoding processes use CESU-8, which converts a surrogate pair to UTF-8.

[Points]

- With the highlighting function the character width enlarges proportional with the expansion factor.
- Using the highlighting function, depending on the type of font, characters become squeezed.
- When the Kanji mode setting is [Japan, Compatible Kanji] or [China, Simplified Chinese (GB18030)] or [China, Traditional Chinese (BIG5)] or [Korean (KSX1001)], it will be a command error.

[Valid Commands]

Print Position	<V>	<H>								
Modification	<P>	<L>	<%>	<&>	</>	<0>	<WD>			

[ESC+k8] 16 x 16 dots Kanji in Vertical Line with 1-byte Character

Hexadecimal code	ESC	k8	Parameter
	<1B>$_{16}$	<6B>$_{16}$<38>$_{16}$	an...n
Initial value	None		

Valid range and term of command	When the power is OFF	The set parameter is not maintained.
	Valid range within items	The set parameter becomes invalid.
	Valid range between items	The set parameter becomes invalid.

[Function]

Specifying 16 x 16 (width x height) dots vertical written Kanji character print and W8 x H16 dots half size character in horizontal line.

[Format]

<k8>an...n

- Parameter

a [Kanji selection mode]
H: HEX characters
B: Binary code
I: HEX characters, smoothing function
C: Binary code, smoothing function
J: HEX characters, highlighting function
D: Binary code, highlighting function
K: HEX characters, smoothing and highlighting function
E: Binary code, smoothing and highlighting function
n [Data] = Print data. Refer to Kanji code (ESC+KC) command for the available character codes.

[Coding Example]

Shift JIS HEX characters, Data: 株式会社ｻﾄｰ

<A>
<KC>1
<V>100<H>200<P>2<L>0305
<u><k8>H8A948EAE89EF8ED0BBC4B0</u>
<Q>2
<Z>

[Supplementary Explanation]

- HEX characters = Kanji Code 4 bytes ASCII / 1 Kanji character (Ex.Shift JIS code)
- Binary code = Kanji Code 2 bytes / 1 Kanji character (Ex.Shift JIS code)
- Smoothing function validity range = Horizontal/vertical valid range: factor 3 to 12
- Highlighting function validity range = Horizontal/vertical valid range: factor 1 to 5
- Print result of two bytes under bar "_" is vertical line (excluding when the kanji mode is [Japan, Compatible kanji]).
- Some JIS213 Kanji (JISX213) characters have values between U+10000 to U+10FFFF.

Both UTF-8 and UTF-16 encodings are supported. Characters are encoded as surrogate pairs in UTF-16, and as a 4 byte code in UTF-8. Some encoding processes use CESU-8, which converts a surrogate pair to UTF-8.

[Points]

- With the highlighting function the character width enlarges proportional with the expansion factor.
- Using the highlighting function, depending on the type of font, characters become squeezed.
- This command is not available for JIS code print data.
- For the half size character (1-byte character code), printing will be performed in W8 x H16 dots.
- For the full size character (2-byte character code), printing will be performed in W16 x H16 dots.
- When the Kanji mode is set to [China, Traditional Chinese (BIG5)], it will be a command error.

[Notes]

- When half-sized character with voiced/P-sound consonant mark is specified, each part of character appears as a single character.

  e.g.) When the word ″ﾊﾞ−″ is specified, it will be written separately such as " ﾊ ", " ﾞ ", " − ".

[Valid Commands]

Print Position	<V>	<H>								
Modification	<P>	<L>	<%>	<&>	</>	<0>	<WD>			

[ESC+k9] 24 x 24 dots Kanji in Vertical Line with 1-byte Character

Hexadecimal code	ESC	k9	Parameter
	<1B>$_{16}$	<6B>$_{16}$<39>$_{16}$	an...n
Initial value	None		

Valid range and term of command	When the power is OFF	The set parameter is not maintained.
	Valid range within items	The set parameter becomes invalid.
	Valid range between items	The set parameter becomes invalid.

[Function]

Specifying 24 x 24 (width x height) dots vertical written Kanji character print and W12 x H24 dots half size character in vertical line.

[Format]

<k9>an...n

- Parameter

a [Kanji selection mode]
H: HEX characters
B: Binary code
I: HEX characters, smoothing function
C: Binary code, smoothing function
J: HEX characters, highlighting function
D: Binary code, highlighting function
K: HEX characters, smoothing and highlighting function
E: Binary code, smoothing and highlighting function
n [Data] = Print data. Refer to Kanji code (ESC+KC) command for the available character codes.

[Coding Example]

Shift JIS HEX characters, Data: 株式会社ｻﾄｰ

<A>
<KC>1
<V>100<H>200<P>2<L>0305
<k9>H8A948EAE89EF8ED0BBC4B0
<Q>2
<Z>

[Supplementary Explanation]

- HEX characters = Kanji Code 4 bytes ASCII / 1 Kanji character (Ex.Shift JIS code)
- Binary code = Kanji Code 2 bytes / 1 Kanji character (Ex.Shift JIS code)
- Smoothing function validity range = Horizontal/vertical valid range: factor 3 to 12
- Highlighting function validity range = Horizontal/vertical valid range: factor 1 to 5
- Print result of two bytes under bar "_" is vertical line (excluding when the kanji mode is [Japan, Compatible kanji]).
- Some JIS213 Kanji (JISX213) characters have values between U+10000 to U+10FFFF.

Both UTF-8 and UTF-16 encodings are supported. Characters are encoded as surrogate pairs in UTF-16, and as a 4 byte code in UTF-8. Some encoding processes use CESU-8, which converts a surrogate pair to UTF-8.

[Points]

- With the highlighting function the character width enlarges proportional with the expansion factor.
- Using the highlighting function, depending on the type of font, characters become squeezed.
- This command is not available for JIS code print data.
- For the half size character (1-byte character code), printing will be performed in W12 x H24 dots.
- For the full size character (2-byte character code), printing will be performed in W24 x H24 dots.

[Notes]

- When half-sized character with voiced/P-sound consonant mark is specified, each part of character appears as a single character.

  e.g.) When the word ″ﾊﾞ−″ is specified, it will be written separately such as " ﾊ ", " ﾞ ", " − ".

[Valid Commands]

Print Position	<V>	<H>								
Modification	<P>	<L>	<%>	<&>	</>	<0>	<WD>			

[ESC+kA] 22 x 22 dots Kanji in Vertical Line with 1-byte Character

Hexadecimal code	ESC	kA	Parameter
	$<1B>_{16}$	$<6B>_{16}<41>_{16}$	an...n
Initial value	None		

Valid range and term of command	When the power is OFF	The set parameter is not maintained.
	Valid range within items	The set parameter becomes invalid.
	Valid range between items	The set parameter becomes invalid.

[Function]

Specifying 22 x 22 (width x height) dots vertical written Kanji character print and W11 x H22 dots half size character in vertical line.

[Format]

<kA>an...n

- Parameter

a [Kanji selection mode]
H: HEX characters
B: Binary code
I: HEX characters, smoothing function
C: Binary code, smoothing function
J: HEX characters, highlighting function
D: Binary code, highlighting function
K: HEX characters, smoothing and highlighting function
E: Binary code, smoothing and highlighting function
n [Data] = Print data. Refer to Kanji code (ESC+KC) command for the available character codes.

[Coding Example]

Shift JIS HEX characters, Data: 株式会社ｻﾄｰ

<A>
<KC>1
<V>100<H>200<P>2<L>0305
<CC>0
<u><kA>H8A948EAE89EF8ED0BBC4B0</u>
<Q>2
<Z>

[Supplementary Explanation]

- HEX characters = Kanji Code 4 bytes ASCII / 1 Kanji character (Ex.Shift JIS code)
- Binary code = Kanji Code 2 bytes / 1 Kanji character (Ex.Shift JIS code)
- Smoothing function validity range = Horizontal/vertical valid range: factor 3 to 12
- Highlighting function validity range = Horizontal/vertical valid range: factor 1 to 5
- Print result of two bytes under bar "_" is vertical line.
- Some JIS213 Kanji (JISX213) characters have values between U+10000 to U+10FFFF.

Both UTF-8 and UTF-16 encodings are supported. Characters are encoded as surrogate pairs in UTF-16, and as a 4 byte code in UTF-8. Some encoding processes use CESU-8, which converts a surrogate pair to UTF-8.

[Points]

- With the highlighting function the character width enlarges proportional with the expansion factor.
- Using the highlighting function, depending on the type of font, characters become squeezed.
- This command is not available for JIS code print data.
- For the half size character (1-byte character code), printing will be performed in W11 x H22 dots.
- For the full size character (2-byte character code), printing will be performed in W22 x H22 dots.
- When the Kanji mode setting is [Japan, Compatible Kanji] or [China, Simplified Chinese (GB18030)] or [China, Traditional Chinese (BIG5)] or [Korean (KSX1001)], it will be a command error.

[Notes]

- When half-sized character with voiced/P-sound consonant mark is specified, each part of character appears as a single character.

  e.g.) When the word ″ﾊﾞｰ″ is specified, it will be written separately such as " ﾊ ", " ﾞ ", " ｰ ".

[Valid Commands]

Print Position	<V>	<H>								
Modification	<P>	<L>	<%>	<&>	</>	<0>	<WD>			

[ESC+kB] 32 x 32 dots Kanji in Vertical Line with 1-byte Character

Hexadecimal code	ESC	kB	Parameter
	$<1B>_{16}$	$<6B>_{16}<42>_{16}$	an...n
Initial value	Shift-JIS		

Valid range and term of command	When the power is OFF	The set parameter is not maintained.
	Valid range within items	The set parameter becomes invalid.
	Valid range between items	The set parameter becomes invalid.

[Function]

Specifying 32 x 32 (width x height) dots vertical written Kanji character print and W16 x H32 dots half size character in horizontal line.

[Format]

<kB>an...n

- Parameter

a [Kanji selection mode]
H: HEX characters
B: Binary code
I: HEX characters, smoothing function
C: Binary code, smoothing function
J: HEX characters, highlighting function
D: Binary code, highlighting function
K: HEX characters, smoothing and highlighting function
E: Binary code, smoothing and highlighting function
n [Data] = Print data. Refer to Kanji code (ESC+KC) command for the available character codes.

[Coding Example]

Shift JIS HEX characters, Data: 株式会社ｻﾄｰ

<A>
<KC>1
<V>100<H>200<P>2<L>0305
<CC>0
<u><kB>H8A948EAE89EF8ED0BBC4B0</u>
<Q>2
<Z>

[Supplementary Explanation]

- HEX characters = Kanji Code 4 bytes ASCII / 1 Kanji character (Ex.Shift JIS code)
- Binary code = Kanji Code 2 bytes / 1 Kanji character (Ex.Shift JIS code)
- Smoothing function validity range = Horizontal/vertical valid range: factor 3 to 12
- Highlighting function validity range = Horizontal/vertical valid range: factor 1 to 5
- Print result of two bytes under bar "_" is vertical line (excluding when the kanji mode is [Compatible kanji]).
- Some JIS213 Kanji (JISX213) characters have values between U+10000 to U+10FFFF.

Both UTF-8 and UTF-16 encodings are supported. Characters are encoded as surrogate pairs in UTF-16, and as a 4 byte code in UTF-8. Some encoding processes use CESU-8, which converts a surrogate pair to UTF-8.

[Points]

- With the highlighting function the character width enlarges proportional with the expansion factor.
- Using the highlighting function, depending on the type of font, characters become squeezed.
- This command is not available for JIS code print data.
- For the half size character (1-byte character code), printing will be performed in W16 x H32 dots.
- For the full size character (2-byte character code), printing will be performed in W32 x H32 dots.
- When the Kanji mode setting is [Japan, Compatible Kanji] or [China, Simplified Chinese (GB18030)] or [China, Traditional Chinese (BIG5)] or [Korean (KSX1001)], it will be a command error.

[Notes]

- When half-sized character with voiced/P-sound consonant mark is specified, each part of character appears as a single character.

  e.g.) When the word ″ﾊﾞｰ″ is specified, it will be written separately such as " ﾊ ", " ﾞ ", " ｰ ".

[Valid Commands]

Print Position	<V>	<H>								
Modification	<P>	<L>	<%>	<&>	</>	<0>	<WD>			

[ESC+kD] 40 x 40 dots Kanji in Vertical Line with 1-byte Character

Hexadecimal code	ESC	kD	Parameter
	$<1B>_{16}$	$<6B>_{16}<44>_{16}$	an...n
Initial value	Shift-JIS		

Valid range and term of command	When the power is OFF	The set parameter is not maintained.
	Valid range within items	The set parameter becomes invalid.
	Valid range between items	The set parameter becomes invalid.

[Function]

Specifying 40 x 40 (width x height) dots vertical written Kanji character print and W20 x H40 dots half size character in vertical line.

[Format]

<kD>an...n

- Parameter

a [Kanji selection mode]
H: HEX characters
B: Binary code
I: HEX characters, smoothing function
C: Binary code, smoothing function
J: HEX characters, highlighting function
D: Binary code, highlighting function
K: HEX characters, smoothing and highlighting function
E: Binary code, smoothing and highlighting function
n [Data] = Print data. Refer to Kanji code (ESC+KC) command for the available character codes.

[Coding Example]

Shift JIS HEX characters, Data: 株式会社ｻﾄｰ

<A>
<KC>1
<V>100<H>200<P>2<L>0305
<CC>0
<u><kD>H8A948EAE89EF8ED0BBC4B0</u>
<Q>2
<Z>

[Supplementary Explanation]

- HEX characters = Kanji Code 4 bytes ASCII / 1 Kanji character (Ex.Shift JIS code)
- Binary code = Kanji Code 2 bytes / 1 Kanji character (Ex.Shift JIS code)
- Smoothing function validity range = Horizontal/vertical valid range: factor 3 to 12
- Highlighting function validity range = Horizontal/vertical valid range: factor 1 to 5
- Print result of two bytes under bar "_" is vertical line.
- Some JIS213 Kanji (JISX213) characters have values between U+10000 to U+10FFFF.

Both UTF-8 and UTF-16 encodings are supported. Characters are encoded as surrogate pairs in UTF-16, and as a 4 byte code in UTF-8. Some encoding processes use CESU-8, which converts a surrogate pair to UTF-8.

[Points]

- With the highlighting function the character width enlarges proportional with the expansion factor.
- Using the highlighting function, depending on the type of font, characters become squeezed.
- This command is not available for JIS code print data.
- For the half size character (1-byte character code), printing will be performed in W20 x H40 dots.
- For the full size character (2-byte character code), printing will be performed in W40 x H40 dots.
- When the Kanji mode setting is [Japan, Compatible Kanji] or [China, Simplified Chinese (GB18030)] or [China, Traditional Chinese (BIG5)] or [Korean (KSX1001)], it will be a command error.

[Notes]

- When half-sized character with voiced/P-sound consonant mark is specified, each part of character appears as a single character.

  e.g.) When the word ″ﾊﾞｰ″ is specified, it will be written separately such as "ﾊ", "ﾞ", "ｰ".

[Valid Commands]

Print Position	<V>	<H>								
Modification	<P>	<L>	<%>	<&>	</>	<0>	<WD>			

[ESC+T1] 16 x 16 dots External Font Registration

Hexadecimal code	ESC	T1	Parameter
	<1B>$_{16}$	<54>$_{16}$<31>$_{16}$	abbn...n
Initial value	None		

Valid range and term of command	When the power is OFF	The set parameter is not maintained.
	Valid range within items	The set parameter becomes invalid.
	Valid range between items	The set parameter becomes invalid.

[Function]

Registering 16 x 16 dots external fonts.

[Format]

<T1>abbn...n

- Parameter

a [Registration data selection]
H: Registration code in HEX character
B: Registration code in binary code

b [Registration font code address]
Using Kanji set <KS> command to set Japanese (0,1,2)
JIS code
H: Up to 95 registrations from "21" to "7F" is available.
B: Up to 95 registrations from 21H to 7FH is available.
Shift JIS code
H: Up to 95 registrations from "40" to "9E" is available.
B: Up to 95 registrations from 40H to 9EH is available.
Unicode<ph> (UTF-16, UTF-8)
H: Up to 95 registrations from "00" to "5E" is available.
B: Up to 95 registrations from 00H to 5EH is available.
Using Kanji set <KS> command to set other than Japanese
(3 (China Simplified Chinese), 5 (China Traditional Chinese), 6 (Korean))
GB18030, BIG5, KSC5601(EUC-KR) code
H: Up to 95 registrations from "21" to "7F" is available.
B: Up to 95 registrations from 21H to 7FH is available.
Unicode (UTF-8)
H: Up to 95 registrations from "00" to "5E" is available.
B: Up to 95 registrations from 00H to 5EH is available.

n [Registered external font data] = Data

[Coding Example 1]

Registration data in JIS HEX character.

```
<A>
<KS>0
<KC>0
<CC>0
<T1>H21
00FF.............FF00
<Z>

<A>
<KS>0
```

<KC>0
<CC>0
<V>100<H>200<K1>H9021
<Q>2
<Z>

[Coding Example 2]

Registration data in Shift JIS binary code.

<A>
<KS>0
<KC>1
<CC>0
<T1>B<40>$_{16}$
<00FF.....FF00>$_{16}$
<Z>

<A>
<KS>0
<KC>1
<CC>0
<V>100<H>200<K1>B<90>$_{16}$<40>$_{16}$
<Q>2
<Z>

[Coding Example 3]

Registration data in Unicode binary code.

<A>
<KS>0
<KC>2
<CC>0
<T1>B<00>$_{16}$
<00FF .....FF00>$_{16}$
<Z>

<A>
<KS>0
<KC>2
<CC>0
<V>100<H>200<K1>B<E0>$_{16}$<00>$_{16}$
<Q>2
<Z>

[Coding Example 4]

Register in the user registration memory.

<A>
<KS>0
<KC>1
<CC>1
<T1>B<40>$_{16}$
<00FF .....FF00>$_{16}$
<Z>

[Supplementary Explanation]

- Registering 16 x 16 dots external fonts in the internal memory or user registration memory.
- The code to specify in the registration font code address needs to match the Kanji Set <KS> and Kanji Code <KC>.
- Overwriting registration data is available.
- The order of data registration is as follows.
- The data registered in the memory of this product will be deleted at the power off. In this case, you need to register the data again.

External character file [16 x 16]

D1	D2
D3	D4
D5	D6
|	|
D31	D32

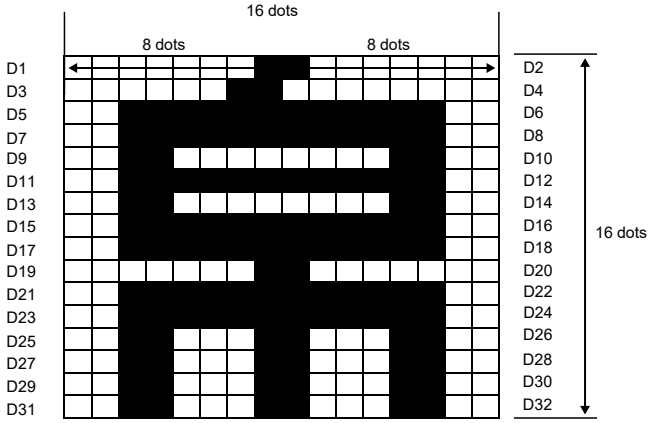

When registering the external characters described above, D1 data becomes <01>$_{16}$ and D2 data becomes <80>$_{16}$ because D1 consists of [00000001], D2 consists of [10000000].
In the same manner, D3 is <03>$_{16}$, D4 is <00>$_{16}$, D5 is <3F>$_{16}$, D6 is <FC>$_{16}$, and the external registration data will be <018003003FFC…..>$_{16}$ up to D32.

[Points]

- The data registered in the user registration memory will be maintained after the power is off.
- You cannot use the internal memory in combination with the user registration memory.
- Specify the slot to register.

  If <CC> command is not sent after the power on, the data is registered in the internal memory.

[ESC+T2] 24 x 24 dots External Font Registration

Hexadecimal code	ESC	T2	Parameter
	<1B>$_{16}$	<54>$_{16}$<32>$_{16}$	abbn...n
Initial value	None		

Valid range and term of command	When the power is OFF	The set parameter is not maintained.
	Valid range within items	The set parameter becomes invalid.
	Valid range between items	The set parameter becomes invalid.

[Function]

Registering 24 x 24 dots external fonts.

[Format]

<T2>abbn...n

- Parameter

a [Registration data selection]
H: Registration code in HEX character
B: Registration code in binary code

b [Registration font code address]
Using Kanji set <KS> command to set Japanese (0,1,2)
JIS code
H: Up to 95 registrations from "21" to "7F" is available.
B: Up to 95 registrations from 21H to 7FH is available.
Shift JIS code
H: Up to 95 registrations from "40" to "9E" is available.
B: Up to 95 registrations from 40H to 9EH is available.
Unicode<ph> (UTF-16, UTF-8)
H: Up to 95 registrations from "00" to "5E" is available.
B: Up to 95 registrations from 00H to 5EH is available.
Using Kanji set <KS> command to set other than Japanese
(3 (China Simplified Chinese), 5 (China Traditional Chinese), 6 (Korean))
GB18030, BIG5, KSC5601(EUC-KR) code
H: Up to 95 registrations from "21" to "7F" is available.
B: Up to 95 registrations from 21H to 7FH is available.
Unicode (UTF-8)
H: Up to 95 registrations from "00" to "5E" is available.
B: Up to 95 registrations from 00H to 5EH is available.

n [Registered external font data] = Data

[Coding Example 1]

Registration data in JIS HEX character.

```
<A>
<KS>0
<KC>0
<CC>0
<T2>H21
00FF ............FF00
<Z>

<A>
<KS>0
```

<KC>0
<CC>0
<V>100<H>200<K2>H9021
<Q>2
<Z>

[Coding Example 2]

Registration data in Shift JIS binary code.

<A>
<KS>0
<KC>1
<CC>0
<T2>B<40>$_{16}$
<00FF.....FF00>$_{16}$
<Z>

<A>
<KS>0
<KC>1
<CC>0
<V>100<H>200<K2>B<90>$_{16}$<40>$_{16}$
<Q>2
<Z>

[Coding Example 3]

Registration data in Unicode binary code.

<A>
<KS>0
<KC>2
<CC>0
<T2>B<00>$_{16}$
<00FF .....FF00>$_{16}$
<Z>

<A>
<KS>0
<KC>2
<CC>0
<V>100<H>200<K2>B<E0>$_{16}$<00>$_{16}$
<Q>2
<Z>

[Coding Example 4]

Register in the user registration memory.

<A>
<KS>0
<KC>1
<CC>1
<T2>B<41>$_{16}$
<00FF .....FF00>$_{16}$
<Z>

[Supplementary Explanation]

- Registering 24 x 24 dots external fonts in the internal memory or user registration memory.
- The code to specify in the registration font code address needs to match the Kanji Set <KS> and Kanji Code <KC>.
- Overwriting registration data is available.
- The order of data registration is as follows.
- The data registered in the memory of this product will be deleted at the power off. In this case, you need to register the data again.

External character file [24 × 24]

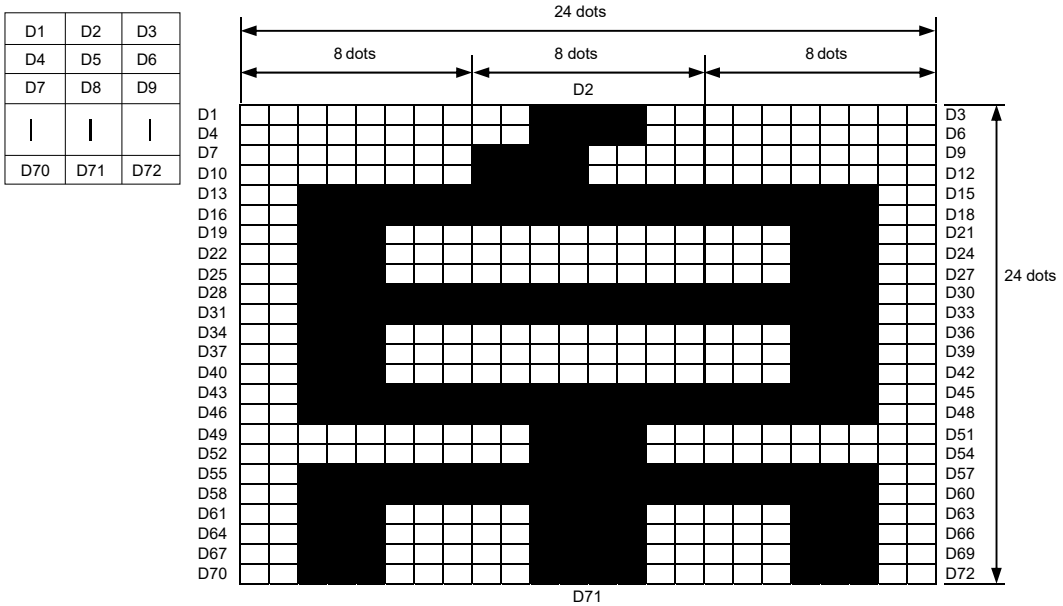

When registering the external characters described above, D1 data becomes <00>$_{16}$ and D2 data becomes <3C>$_{16}$ and D3 data becomes <00>$_{16}$ because D1 consists of [00000000], D2 consists of [00111100] and D3 consists of [00000000].
In the same manner, D4 is <00>$_{16}$, D5 is <3C>$_{16}$, D6 is <00>$_{16}$, and the external registration data will be <003C00003C00…..>$_{16}$ up to D72.

[Points]

- The data registered in the user registration memory will be maintained after the power is off.
- You cannot use the internal memory in combination with the user registration memory.
- Specify the slot to register.

  If <CC> command is not sent after the power on, the data is registered in the internal memory.

[ESC+K1(K2)] Horizontal Writing External Font Call

Hexadecimal code	ESC	K1(K2)	Parameter
	<1B>$_{16}$	<4B>$_{16}$<31>$_{16}$ (<4B>$_{16}$<32>$_{16}$)	ab...b
Initial value	None		

Valid range and term of command	When the power is OFF	The set parameter is not maintained.
	Valid range within items	The set parameter becomes invalid.
	Valid range between items	The set parameter becomes invalid.

[Function]

Invoking horizontal external characters saved in the memory of this product to print out.

[Format]

<K1>ab...b

<K2>ab...b

- Parameter

a [Kanji selection mode]
H: HEX character
B: Binary code
I: HEX character letters, smoothing function
C: Binary code, smoothing function
J: HEX character letters, highlight function
D: Binary code, highlight function
K: HEX character letters, smoothing and highlight function
E: Binary character letters, smoothing and highlight function

b [Registration code]
Using Kanji set <KS> command to set Japanese (0,1,2)
JIS code
H, I, J, K: "9021" to "907F"
B, C, D, E: 9021H to 907FH
Shift JIS code
H, I, J, K: "F040" to "F09E"
B, C, D, E: F040H to F09EH
Unicode (UTF-16)
H, I, J, K: "E000" to "E05E"
B, C, D, E: E000H to E05EH
Unicode (UTF-8)(UTF-16 E000 to E05E expressed in UTF-8)
H, I, J, K: "EE8080" to "EE819E"
B, C, D, E: EE8080H to EE819EH

Using Kanji set <KS> command to set other than Japanese
(3 (China Simplified Chinese), 5 (China Traditional Chinese), 6 (Korean))
GB18030, BIG5, KSC5601(EUC-KR) code
H, I, J, K: "8021" to "807F"
B, C, D, E: 8021H to 807FH
Unicode (UTF-8)(UTF-16 E000 to E05E expressed in UTF-8)
H, I, J, K: "EE8080" to "EE819E"
B, C, D, E: EE8080H to EE819EH

[Coding Example 1]

Invokes 16 x 16 dots external character, Registration data in JIS HEX character

<A>
<KS>0
<KC>0
<T1>H21
00FF.....FF00
<Z>

<A>
<KS>0
<KC>0
<V>100<H>200**<K1>H9021**
<Q>2
<Z>

[Coding Example 2]

Invokes 24 x 24 dots external character, Registration data in Shift JIS binary code

<A>
<KS>0
<KC>1
<T2>B<40>$_{16}$
<00FF .....FF00>$_{16}$
<Z>

<A>
<KS>0
<KC>1
<V>100<H>200**<K2>B<F0>$_{16}$<40>$_{16}$**
<Q>2
<Z>

[Coding Example 3]

Invokes 16 x 16 dots external character, Registration data in Unicode character

<A>
<KS>0
<KC>2
<T1>H01
00FF.....FF00
<Z>

<A>
<KS>0
<KC>2
<V>100<H>200**<K1>HE001**
<Q>2
<Z>

[Supplementary Explanation]

- If the print out is not performed properly, register the data again.
- You cannot call the external characters registered as JIS/Shift JIS character as Unicode, and vice versa.
- Valid data of registration code vary according to the Kanji set command <KS>.

[ESC+k1(k2)] Horizontal Writing External Font Call

Hexadecimal code	ESC	k1(k2)	Parameter
	<1B>$_{16}$	<6B>$_{16}$<31>$_{16}$ (<6B>$_{16}$<32>$_{16}$)	ab...b
Initial value	None		

Valid range and term of command	When the power is OFF	The set parameter is not maintained.
	Valid range within items	The set parameter becomes invalid.
	Valid range between items	The set parameter becomes invalid.

[Function]

Invoking vertical external characters saved in the memory of this product to print out.

[Format]

<k1>ab...b

<k2>ab...b

- Parameter

a [Kanji selection mode]
H: HEX character
B: Binary code
I: HEX character letters, smoothing function
C: Binary code, smoothing function
J: HEX character letters, highlight function
D: Binary code, highlight function
K: HEX character letters, smoothing and highlight function
E: Binary character letters, smoothing and highlight function

b [Registration code]
Using Kanji set <KS> command to set Japanese (0,1,2)
JIS code
H, I, J, K: "9021" to "907F"
B, C, D, E: 9021H to 907FH
Shift JIS code
H, I, J, K: "F040" to "F09E"
B, C, D, E: F040H to F09EH
Unicode (UTF-16)
H, I, J, K: "E000" to "E05E"
B, C, D, E: E000H to E05EH
Unicode (UTF-8)(UTF-16 E000 to E05E expressed in UTF-8)
H, I, J, K: "EE8080" to "EE819E"
B, C, D, E: EE8080H to EE819EH

Using Kanji set <KS> command to set other than Japanese
(3 (China Simplified Chinese), 5 (China Traditional Chinese), 6 (Korean))
GB18030, BIG5, KSC5601(EUC-KR) code
H, I, J, K: "8021" to "807F"
B, C, D, E: 8021H to 807FH
Unicode (UTF-8)(UTF-16 E000 to E05E expressed in UTF-8)
H, I, J, K: "EE8080" to "EE819E"
B, C, D, E: EE8080H to EE819EH

[Coding Example 1]

Invokes 16 x 16 dots external character, Registration data in JIS HEX character

<A>
<KS>0
<KC>0
<T1>H21
00FF.....FF00
<Z>

<A>
<KS>0
<KC>0
<V>100<H>200**<k1>H9021**
<Q>2
<Z>

[Coding Example 2]

Invokes 24 x 24 dots external character, Registration data in Shift JIS binary code

<A>
<KS>0
<KC>1
<T2>B<40>$_{16}$
<00FF .....FF00>$_{16}$
<Z>

<A>
<KS>0
<KC>1
<V>100<H>200**<k2>B<F0>$_{16}$<40>$_{16}$**
<Q>2
<Z>

[Coding Example 3]

Invokes 16 x 16 dots external character, Registration data in Unicode character

<A>
<KS>0
<KC>2
<T1>H01
00FF.....FF00
<Z>

<A>
<KS>0
<KC>2
<V>100<H>200**<k1>HE001**
<Q>2
<Z>

[Supplementary Explanation]

- If the print out is not performed properly, register the data again.
- You cannot call the external characters registered as JIS/Shift JIS character as Unicode, and vice versa.
- Valid data of registration code vary according to the Kanji set command <KS>.

Barcode Commands

In barcode specification, print of various barcodes, change of bar width ratio, and print of guard bar or human-readable information can be performed by the specification (B, D, BD) after ESC.

The contents may vary depending on the specification. This and next page should be read closely and followed.

Refer to the table below for the specification of B, D, and BD.

[Specification of Bar Width Ratio]

Barcode specification parameter	Barcode specification	<B>	<D>	<BD>
0	CODABAR(NW-7)	1:3	1:2	2:5
1	CODE39	1:3	1:2	2:5
2	ITF	1:3	1:2	2:5
5	Industrial 2of5	1:3	1:2	2:5
6	Matrix 2of5	1:3	1:2	2:5

(1) Bar Width Ratio

Barcode is composed of Narrow Bar, Wide Bar, Narrow Space and Wide Space. Bar width ratio is the proportion of Narrow Bar and Wide Bar.

- Barcode specification (Ratio 1:3) <B>

  This barcode is composed of Narrow Bar [1] and Wide Bar [3].

- Barcode specification (Ratio 1:2) <D>

  This barcode is composed of Narrow Bar [1] and Wide Bar [2].

- Barcode specification (Ratio 2:5) <BD>

  This barcode is composed of Narrow Bar [2] and Wide Bar [5].

If specifying bar width ratio for your own convenience, register the ratio with Bar Width Ratio <BT> and print labels with Print of Specified Bar Width Ratio <BW>.

(2) Width of Narrow Bar and Height of Barcode

Narrow bar indicates the narrow bar width, and bar height indicates the height of barcode.

For instance, printing narrow bar for 1 dot in head density of 8 dots/mm (203 dpi), the narrow bar width will be 0.125 mm and barcode scanner may have a reading problem. To avoid this problem, set the narrow bar to 2 dots so that the narrow bar width will be 0.25 mm and this will improve the scanner reading condition.

There is a necessity to set the narrow bar width based on head density of this product or performance of barcode scanner. In bar width ratio, [Narrow bar width] specification sets the width of bar.

e.g.)

When bar width ratio = 1:3 and narrow bar width is 3 dots, bar width ratio becomes 3:9.

Bar height is to specify the height of barcode, and proper height based on the scanner type can be set.

(3) Intercharacter Gap

Intercharacter gap is the space between two adjacent barcode characters in a discrete barcode.

To specify and enable intercharacter gap, insert Character Pitch <P> right before barcode specification such as <B>, <D> and <BD> or Print of Barcode with Registered Ratio <BW>. If not, initial value (2 dots) will be set.

Intercharacter gap is designable for the following barcodes.

- NW-7
- CODE39
- Industrial 2of5
- Matrix 2of5

Intercharacter gap is the multiplier of values specified with Character Pitch <P> and narrow bar width.

e.g.)

When Character Pitch <P> is 3 and narrow bar width is 2 dots: Intercharacter gap = 3 x 2 = 6 (dots)

(4) Designation of Human Readable Information (HRI) and Guard Bar

For UPC-A and JAN/EAN 8 and 13 digits barcode, availability of human-readable information (hereinafter HRI) and guard bar can be specified.

Barcode specification parameter	Barcode specification	<B>	<D>	<BD>
3	JAN/EAN13	HRI: Nil Guard bar: Nil	HRI: Nil Guard bar: Available	HRI: Available Guard bar: Available
4	JAN/EAN8	HRI: Nil Guard bar: Nil	HRI: Nil Guard bar: Available	HRI: Available Guard bar: Available
H	UPC-A	HRI: Nil Guard bar: Nil	HRI: Nil Guard bar: Available	HRI: Available Guard bar: Available

Barcode specification parameter	Barcode specification	<BM>	<BL>
H	UPC-A	HRI: Available Guard bar: Available	HRI: Nil Guard bar: Available

(1) Specification of <B> (No HRI, No guard bar)

If specifying <B>, following barcode will be printed.

(2) Specification of <D> (No HRI, Guard bar available)

If specifying <D>, following barcode will be printed.

[Note]

- HRI is printable specifying <Character Type> data subsequently to <D>.
- For more information, refer to Barcode Specification (Selection of HRI) <D>~<d>.

(3) Specification of <BD> (HRI and guard bar available)

If specifying <BD>, following barcode will be printed.

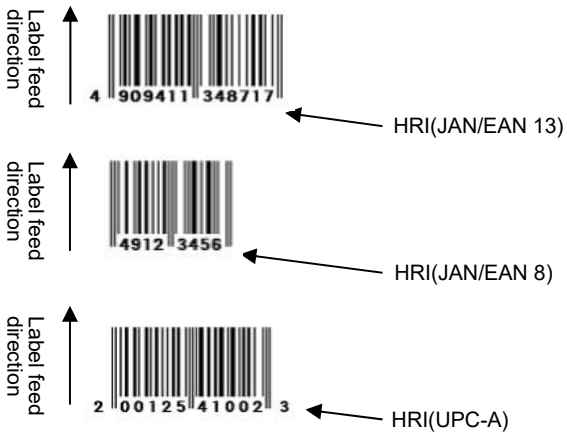

[Barcode Specification Only]

Barcode specification parameter	Barcode specification	<B>
C	CODE93	Barcode only
E	UPC-E	Barcode only
G	CODE128	Barcode only
I	UCC/EAN 128 for standard carton ID	Barcode only
Z	Customer Barcode	Barcode only

Note

- In this case, barcode will not have specification such as Bar Width Ratio and HRI.
- HRI will not be printed when barcode is error for barcode with HRI.

(5) Composition of Check Digit

Refer to the table below for check digit in each barcode.

[Composition of C/D]

Barcode specification parameter	Barcode specification	Input digit No.	Print digit number and contents
3	JAN/EAN13	12 digits	13-digit (Input data of barcode + C/D) C/D is calculated by modulus10.
		13 digits	13-digit (Input data of barcode) C/D is not checked.
4	JAN/EAN8	7 digits	8 digits (Input data of barcode + C/D) C/D is calculated by modulus10.
		8 digits	8-digit (Input data of barcode) C/D is not checked.
C	CODE93	Max. 99 digits	C/D is calculated by modulus47.
E	UPC-E	6-digit only	C/D is calculated by modulus10.
G	CODE128	-	C/D is calculated by modulus103.
H	UPC-A	11-digit only	12-digit (Input data of barcode + C/D) C/D is calculated by modulus10.
I	UCC/EAN128 for standard carton ID UCC/EAN128	17-digit only	C/D is calculated by modulus103.

(6) Barcode Rotation Print

Print direction of barcode can be rotated. Note that when specifying Serial 1 and Serial 2 for barcode rotation, it may cause blurring due to barcode enlargement ratio.

Avoid printing of 1-dot narrow bar since1 dot becomes 0.125 / 0.083 / 0.042 mm when head density is 8 dots/mm (203 dpi) or 12 dots/mm (305 dpi) or 24 dots/mm (609 dpi).

Parallel 1: Forward feed print

Parallel 2: Backfeed print at 180-degree rotation

Serial 1: Forward feed print at 90-degree rotation

Serial 2: Forward feed print at 270-degree rotation

* Forward feed: Prints horizontally to label feed direction

1) To print with Parallel 1 and Parallel 2, specify enlargement ratio of bar width so that narrow bar gets at least 2 dots. ("L" indicates the enlargement ratio to the bar width ratio.)

	Head density		
	8 dots/mm	**12 dots/mm**	**24 dots/mm**
Bar width ratio 1:2	2L or more	2L or more	4L or more
Bar width ratio 1:3	2L or more	2L or more	4L or more
Bar width ratio 2:5	1L or more	1L or more	2L or more
UPC-A/EAN/JAN	2L or more	2L or more	4L or more

2) If printing in serial 1 or serial 2 mode, specify the bar width expansion factor so that when using a 8 dots/mm or 12 dots/mm head the width of the narrow bar is at least 3 dots.

	Head density		
	8 dots/mm	**12 dots/mm**	**24 dots/mm**
Bar width ratio 1:2	3L or more	3L or more	6L or more
Bar width ratio 1:3	3L or more	3L or more	6L or more
Bar width ratio 2:5	2L or more	2L or more	4L or more
UPC-A/EAN/JAN	3L or more	3L or more	6L or more

3) If printing in serial 1 or serial 2, reduce the print speed.

(7) Printing Barcode Exceeding the Area of Media Size (<A1>)

When printing barcode or HRI exceeding the area of media size (<A1>), the barcode and HRI inside the media will be printed.

Example of printing UPC-A (with HRI) exceeding the area of media size

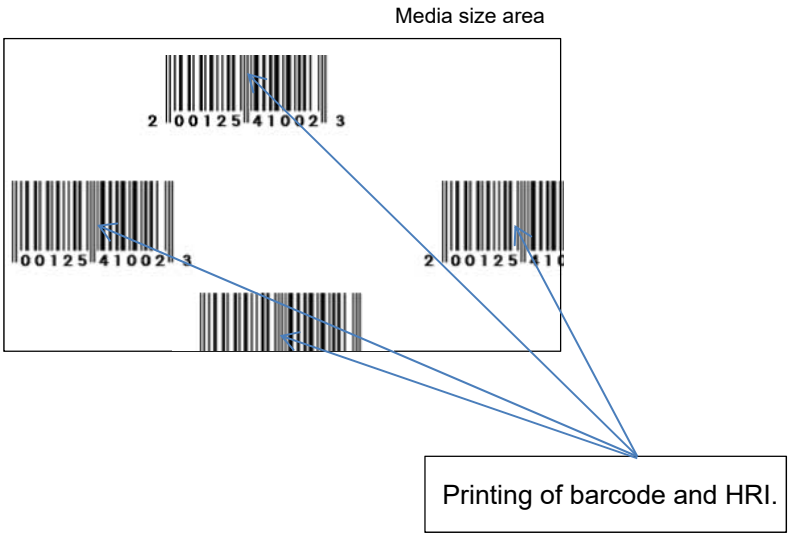

[ESC+B] Barcode (Ratio 1:3)

Hexadecimal code	ESC	B	Parameter
	<1B>$_{16}$	<42>$_{16}$	abbcccn...n
Initial value	None		

Valid range and term of command	When the power is OFF	The set parameter is not maintained.
	Valid range within items	The set parameter becomes invalid.
	Valid range between items	The set parameter becomes invalid.

[Function]

Specifying a barcode with a ratio of 1:3 between narrow bar and wide bar.

[Format]

<B>abbcccn...n

- Parameter

  a [Barcode type] = Refer to table below
  b [Narrow bar width] = Valid range : 01 to 36 dots
  c [Barcode height] = Valid range : 001 to 999 dots
  n [Print data] = Data

Barcode types (Ratio of module composition may not be available depending on the barcode.)

a	Barcode type	Descriotion	Ratio
0	CODABAR(NW-7)	Set print data including Start/Stop character. Start/Stop characters are [A, B, C, D, E, N, T, a, b, c, d, e, n, t, *]. Note that scan result of the characters [E, N, T, a, b, c, d, e, n, t] is [D, B, A, A, B, C, D, D, B, A, C]. e.g.) When barcode print data is [123], specify [A123A]. Barcode character pitch becomes enabled. For print data, refer to the CODABAR (NW-7) code table.	1:3
1	CODE39	Set print data including Start/Stop character. Start/Stop Character is [*]. e.g.) When barcode print data is [12345], specify [*12345*]. Barcode character pitch becomes enabled. For print data, refer to the CODE39 code table.	1:3
2	ITF	Specify print data in even-numbered digit. If specifying in odd-numbered digit, add "0" to the head of print data. For print data, refer to the ITF code table.	1:3
3	JAN/EAN13	This barcode has no guard bars and no human-readable characters. For print data, refer to the JAN/EAN13 code table.	Fixed (11, 12, 13 digits)
4	JAN/EAN8	This barcode has no guard bars and no human-readable characters. For print data, refer to the JAN/EAN8 code table.	Fixed (7, 8 digits)
5	Industrial 2of5	Barcode character pitch becomes enabled. For print data, refer to the Industrial 2of5 code table.	1:3

a	Barcode type	Descriotion	Ratio
6	Matrix 2of5	Barcode character pitch becomes enabled. For print data, refer to the Matrix 2of5 code table.	1:3
A	MSI	Print data can be specified up to 13-digit. Refer to the code list of the MSI for the print data.	Fixed
C	CODE93	Refer to CODE93 <BC>.	Fixed
E	UPC-E	Specify 6-digit number for print data. For print data, refer to the UPC-E code table.	Fixed
F	UPC add-on code Bookland	Refer to UPC add-on code/Bookland <BF>.	Fixed
G	CODE128	Refer to CODE128 Barcode <BC>.	Fixed
H	UPC-A	This barcode has no guard bars and no human-readable characters. For print data, refer to the UPC-A code table.	Fixed
I	GS1-128(UCC/EAN128)	Refer to GS1-128 (UCC/EAN128) <BI>.	Fixed
P	Postnet	Refer to the Postnet specification <BP>.	Fixed
S	USPS code	Refer to the USPS code specification <BS>.	Fixed

[Coding Example 1]

Barcode type: CODE39, Narrow bar width: 03, Height of barcode: 120, Print data: *1234AB*

<A>
<V>100<H>100**<B>103120*1234AB***
<Q>2
<Z>

[Coding Example 2]

Barcode type: JAN8, Narrow bar width: 02, Height of barcode: 080, Print data: 4912345

<A>
<V>100<H>100**<B>4020804912345**
<Q>2
<Z>

[Supplementary Explanation]

- The inter-character pitch of the barcode is valid at CODABAR (NW-7), CODE39, Industrial 2of5 and Matrix 2of5. The barcode inter-character pitch is set by specifying the character pitch <P> immediately before.

  If not set, the inter-character pitch will be of the same size as a narrow space and will become multiples of a narrow bar.

Command	Ratio	Narrow space width	<P> specification	Gap between characters	
				Narrow bar width is [1]	Narrow bar width is [2]
<B>	1:3	1	None	1	2
			<P>0	1	2
			<P>1	1	2
			<P>2	2	4
			<P>3	3	6
			<P>4	4	8

- For print data of each barcode type, refer to the code tables of barcode.

[Notes]

- If the value other than valid range is set, command error will occur and barcode will not be printed.
- Barcode will be printed even if the data exceed the printable area.
- Increasing narrow bar width may exceed the printing area.
- Scanner may not read the barcode with valid character pitch when Character Pitch <P> is increased. Also, increasing the narrow bar width may cause the same type of problem. For more information, refer to the documentation of your scanner.
- For specifying the narrow bar width, consider the reading compatibility of scanner and head density beforehand.
  - 203 dpi: 2 dots or more
  - 305 dpi: 2 dots or more
  - 609 dpi: 4 dots or more
- Adjust Print Speed <CS> or Print Darkness <#F> if there is a problem in barcode reading.
- Matrix 2of5 will be expressed as Coop2of5/NEC2of5.
- If Start/Stop character is not included in print data at the time of CODABAR (NW-7) or CODE39 specified, barcode will be printed; however, scanner cannot read it.
- If sending the print data including check digit at the time of JAN/EAN13 or JAN/EAN8 specified, set the correct calculated value. Barcode will be printed even when the data includes improper check digit; however, scanner cannot read it.

[ESC+D] Barcode (Ratio 1:2)

Hexadecimal code	ESC	D	Parameter
	$<1B>_{16}$	$<44>_{16}$	abbcccn...n
Initial value	None		

Valid range and term of command	When the power is OFF	The set parameter is not maintained.
	Valid range within items	The set parameter becomes invalid.
	Valid range between items	The set parameter becomes invalid.

[Function]

Specifying a barcode with a ratio of 1:2 between narrow bar and wide bar.

[Format]

<D>abbcccn...n

- Parameter

a [Barcode type] = Refer to table below
b [Narrow bar width] = Valid range : 01 to 36 dots
c [Barcode height] = Valid range : 001 to 999 dots
n [Print data] = Data

Barcode types (Ratio of module composition may not be available depending on the barcode.)

a	Barcode type	Contents	Ratio
0	CODABAR(NW-7)	Set print data including Start/Stop character. Start/Stop characters are [A, B, C, D, E, N, T, a, b, c, d, e, n, t, *]. Note that scan result of the characters [E, N, T, a, b, c, d, e, n, t, *] is [D, B, A, A, B, C, D, D, B, A, C]. e.g.) When barcode print data is [123], specify [A123A]. Barcode character pitch becomes enabled. For print data, refer to the CODABAR(NW-7) code table.	1:2
1	CODE39	Set print data including Start/Stop character. Start/Stop Character is [*]. e.g.) When barcode print data is [12345], specify [*12345*]. Barcode character pitch becomes enabled. For print data, refer to the CODE39 code table.	1:2
2	ITF	Specify print data in even-numbered digit. If specifying in odd-numbered digit, add "0" to the head of print data. For print data, refer to the ITF code table.	1:2
3	JAN/EAN13	This barcode has guard bars and no human-readable characters. For print data, refer to the JAN/EAN13 code table.	Fixed
4	JAN/EAN8	This barcode has guard bars and no human-readable characters. For print data, refer to the JAN/EAN8 code table.	Fixed
5	Industrial 2of5	Barcode character pitch becomes enabled. For print data, refer to the Industrial 2of5 code table.	1:2
6	Matrix 2of5	Barcode character pitch becomes enabled. For print data, refer to the Matrix 2of5 code table.	1:2

a	Barcode type	Contents	Ratio
H	UPC-A	This barcode has guard bars and no human-readable characters. For print data, refer to the UPC-A code table.	Fixed

[Coding Example 1]

Barcode type: CODABAR(NW-7), Narrow bar width: 03, Height of barcode: 120, Print data: A1234A

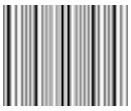

<A>
<V>100<H>100**<D>003120A1234A**
<Q>2
<Z>

[Coding Example 2]

Barcode type: ITF, Narrow bar width: 02, Height of barcode: 080, Print data: 98002345678163

<A>
<V>100<H>100**<D>20208098002345678163**
<Q>2
<Z>

[Coding Example 3]

Barcode type: UPC-A, Narrow bar width: 03, Height of barcode: 120, Print data: 20123948573

<A>
<V>240<H>100**<D>H0312020123948573**
<Q>2
<Z>

[Supplementary Explanation]

- The inter-character pitch of the barcode is valid at CODABAR (NW-7), CODE39, Industrial 2of5 and Matrix 2of5. The barcode inter-character pitch is set by specifying the character pitch <P> immediately before.

  If not set, the inter-character pitch will be of the same size as a narrow space and will become multiples of a narrow bar.
  e.g.)

Command	Ratio	Narrow space width	<P> specification	Gap between characters	
				Narrow bar width is [1]	Narrow bar width is [2]
<D>	1:2	1	None	1	2
			<P>0	1	2
			<P>1	1	2
			<P>2	2	4
			<P>3	3	6
			<P>4	4	8

- For print data of each barcode type, refer to the code tables of barcode.

[Notes]

- If the value other than valid range is set, command error will occur and barcode will not be printed.
- Barcode will be printed even if the data exceed the printable area.
- Increasing narrow bar width may exceed the printing area.
- Scanner may not read the barcode with valid character pitch when Character Pitch <P> is increased. Also, increasing the narrow bar width may cause the same type of problem. For more information, refer to the documentation of your scanner.
- For specifying the narrow bar width, consider the reading compatibility of scanner and head density beforehand.
  - 203 dpi: 2 dots or more
  - 305 dpi: 2 dots or more
  - 609 dpi: 4 dots or more
- Adjust Print Speed <CS> or Print Darkness <#F> if there is a problem in barcode reading.
- Matrix 2of5 will be expressed as Coop2of5/NEC2of5.
- If Start/Stop character is not included in print data at the time of CODABAR(NW-7) or CODE39 specified, barcode will be printed; however, scanner cannot read it.
- If sending the print data including check digit at the time of JAN/EAN-13 or JAN/EAN-8 specified, set the correct calculated value. Barcode will be printed even when the data includes improper check digit; however, scanner cannot read it.

[ESC+D] ~ [ESC+d] Barcode (with HRI)

Hexadecimal code	ESC	D ~ d	Parameter
	<1B>$_{16}$	<44>$_{16}$ ~ Character type	abbcccn...n ~ <d>n...n
Initial value	None		

Valid range and term of command	When the power is OFF	The set parameter is not maintained.
	Valid range within items	The set parameter becomes invalid.
	Valid range between items	The set parameter becomes invalid.

[Function]

Specifying character type of human readable interpretation (HRI) for barcode.

[Format]

<D>abbcccn...n ~ <d>n...n

- Parameter

a [Barcode type]
3: JAN/EAN13
4: JAN/EAN8
H: UPC-A
b [Narrow bar width] = Valid range : 01 to 36 dots
c [Height of barcode] = Valid range: 001 to 999 dots
n [Print data] = Barcode data
d [Character type]
OA
OB
XU
XS
XM
XB
XL
U
S
M
WB
WL
X20
X21
X22
X23
X24

n [Print data] = HRI data

[Coding Example]

Barcode type: JAN/EAN13, Narrow bar width: 03, Barcode height: 120, Barcode data: 4902471000793, Character type: XU, HRI data: 4902471000793

<A>
<V>100<H>200**<D>303120490247100079 3**
<XU>4902471000793
<Q>2
<Z>

[Supplementary Explanation]

- Adds HRI characters with specified font.
- When the data other than specified value is set, printing will not be performed. When barcode enlargement ratio is small and character type is large, HRI text may be overlapped with each other.
- This product will lay out HRI properly.
- HRI for JAN/EAN8, JAN/EAN13, UPC-A will be printed properly in the conditions below.

  For 203 dpi (8 dots/mm) : Appropriate Narrow bar width is [02], [03]
  For 305 dpi (12 dots/mm) : Appropriate Narrow bar width is [03], [04]
  For 609 dpi (24 dots/mm) : Appropriate Narrow bar width is [06], [07], [08]
- HRI will not be printed when barcode is an error for barcode with HRI.
- When specifying <P> and <L>, (<P>02<d>n...n, <L><d>n...n), HRI characters are not printed.

[ESC+BD] Barcode (Ratio 2:5)

Hexadecimal code	ESC	BD	Parameter
	$<1B>_{16}$	$<42>_{16}<44>_{16}$	abbcccn...n
Initial value	None		

Valid range and term of command	When the power is OFF	The set parameter is not maintained.
	Valid range within items	The set parameter becomes invalid.
	Valid range between items	The set parameter becomes invalid.

[Function]

Specifying a barcode with a ratio of 2:5 between narrow bar and wide bar.

[Format]

<BD>abbcccn...n

- Parameter

  a [Barcode type] = Refer to table below
  b [Narrow bar width] = Valid range : 01 to 36 dots
  c [Barcode height] = Valid range : 001 to 999 dots
  n [Print data] = Data

Barcode types (Ratio of module composition may not be available depending on the barcode.)

a	Barcode type	Contents	Ratio
0	UNICODE(NW-7)	Set print data including Start/Stop character. Start/Stop characters are [A, B, C, D, E, N, T, a, b, c, d, e, n, t, *]. Note that scan result of the characters [E, N, T, a, b, c, d, e, n, t, *] is [D, B, A, A, B, C, D, D, B, A, C]. e.g.) When barcode print data is [123], specify [A123A]. Barcode character pitch becomes enabled. For print data, refer to the CODABAR(NW-7) code table.	2:5
1	CODE39	Set print data including Start/Stop character. Start/Stop Character is [*]. e.g.) When barcode print data is [12345], specify [*12345*]. Barcode character pitch becomes enabled. For print data, refer to the CODE39 code table.	2:5
2	ITF	Specify print data in even-numbered digit. If specifying in odd-numbered digit, add "0" to the head of print data. For print data, refer to the ITF code table.	2:5
3	JAN/EAN13	This barcode has guard bars and human-readable characters. For print data, refer to the JAN/EAN13 code table.	Fixed
4	JAN/EAN8	This barcode has guard bars and human-readable characters. For print data, refer to the JAN/EAN8 code table.	Fixed
5	Industrial 2of5	Barcode character pitch becomes enabled. For print data, refer to the Industrial 2of5 code table.	2:5
6	Matrix 2of5	Barcode character pitch becomes enabled. For print data, refer to the Matrix 2of5 code table.	2:5

a	Barcode type	Contents	Ratio
H	UPC-A	This barcode has guard bars and human-readable characters. For print data, refer to the UPC-A code table.	Fixed

[Coding Example 1]

Barcode type: CODABAR(NW-7), Narrow bar width: 03, Height of barcode: 120, Print data: A1234A

<A>
<V>100<H>100**<BD>003120A1234A**
<Q>2
<Z>

[Coding Example 2]

Barcode type: ITF, Narrow bar width: 03, Height of barcode: 120, Print data: 98002345678163

<A>
<V>100<H>100**<BD>20212098002345678163**
<Q>2
<Z>

[Coding Example 3]

Barcode type: UPC-A, Narrow bar width: 03, Height of barcode: 120, Print data: 20123948573

<A>
<V>240<H>100**<BD>H0312020123948573**
<Q>2
<Z>

[Supplementary Explanation]

- The inter-character pitch of the barcode is valid at CODABAR (NW-7), CODE39, Industrial 2of5 and Matrix 2of5. The barcode inter-character pitch is set by specifying the character pitch <P> immediately before.

  If not set, the inter-character pitch will be of the same size as a narrow space width.

Command	Ratio	Narrow space width	<P> specification	Gap between characters	
				Narrow bar width is [1]	Narrow bar width is [2]
<BD>	2:5	2	None	2	4
			<P>0	2	4
			<P>1	1	2
			<P>2	2	4
			<P>3	3	6
			<P>4	4	8

- For print data of each barcode type, refer to the code tables of barcode.
- HRI for JAN/EAN8, JAN/EAN13, UPC-A will be printed properly in the conditions below.

  For 203 dpi (8 dots/mm) : Narrow bar width must be [02], [03]
  For 305 dpi (12 dots/mm) : Narrow bar width must be [03], [04]
  For 609 dpi (24 dots/mm) : Narrow bar width must be [06], [07], [08]
  HRI will not be printed if the value other than the listed above is specified.

[Notes]

- If the value other than valid range is set, command error will occur and barcode will not be printed.
- Barcode will be printed even if the data exceed the printable area.
- Increasing narrow bar width may exceed the printing area.
- Scanner may not read the barcode with valid character pitch when Character Pitch <P> is increased. Also, increasing the narrow bar width may cause the same type of problem. For more information, refer to the documentation of your scanner.
- For specifying the narrow bar width, consider the reading compatibility of scanner and head density beforehand.
- Adjust Print Speed <CS> or Print Darkness <#F> if there is a problem in barcode reading.
- Matrix 2of5 will be expressed as Coop2of5/NEC2of5.
- If Start/Stop character is not included in print data at the time of CODABAR (NW-7) or CODE39 specified, barcode will be printed; however, scanner cannot read it.
- If sending the print data including check digit at the time of JAN/EAN-13 or JAN/EAN-8 specified, set the correct calculated value. Barcode will be printed even when the data includes improper check digit; however, scanner cannot read it.

[ESC+BT] Barcode Ratio Registration

Hexadecimal code	ESC	BT	Parameter
	$<1B>_{16}$	$<42>_{16}<54>_{16}$	abbccddee
Initial value	None		

Valid range and term of command	When the power is OFF	The set parameter is not maintained.
	Valid range within items	The set parameter is valid until the next specification is made.
	Valid range between items	The set parameter is valid until the next specification is made.

[Function]

Specifying the ratio of the narrow bar in regard to the wide bar.

[Format]

<BT>abbccddee

- Parameter

a [Barcode type]
0: CODABAR(NW-7)
1: CODE39
2: ITF
5: Industrial 2of5
6: Matrix 2of5 (Coop2of5, NEC2of5)
b [Narrow space] = Valid range : 01 to 99 dots
c [Wide space] = Valid range : 01 to 99 dots
d [Narrow bar] = Valid range : 01 to 99 dots
e [Wide bar] = Valid range : 01 to 99 dots

[Coding Example]

Barcode type: CODE39, Narrow space: 03, Wide space: 05, Narrow bar: 03, Wide bar: 05

<A>
<BT>103050305
<V>100<H>200<BW>01233*ABCD*
<Q>2
<Z>

[Supplementary Explanation]

- To print barcode with specified ratio, insert Barcode print by specified ratio <BW> after this command.
- When <BW> and the Print Quantity <Q> command are not specified, only the registration of bar width ratio of narrow and wide bars will be performed.
- Only one ratio can be registered.
- If the data other than specified is set, this will not be registered due to command error.
- Matrix 2of5 will be expressed as Coop2of5/NEC2of5.

[ESC+BW] Barcode Print by Specified Ratio

Hexadecimal code	ESC	BW	Parameter
	<1B>$_{16}$	<42>$_{16}$<57>$_{16}$	aabbbn...n
Initial value	None		

Valid range and term of command	When the power is OFF	The set parameter is not maintained.
	Valid range within items	The set parameter becomes invalid.
	Valid range between items	The set parameter becomes invalid.

[Function]

Specifying barcode ratio, saved by <BT>.

[Format]

<BW>aabbbn...n

- Parameter

  a [Narrow bar] = Valid range : 01 to 36 dots
  b [Height of Barcode] = Valid Range : 001 to 999 (dots)
  n [Print data] = Barcode data

[Coding Example]

Narrow bar: 02, Height of Barcode: 120

<A>
<BT>103060306
<V>100<H>200**<BW>02120*ABCD***
<Q>2
<Z>

[Supplementary Explanation]

- The inter-character pitch of the barcode is valid at CODABAR (NW-7), CODE39, Industrial 2of5 and Matrix 2of5. The barcode inter-character pitch is set by specifying the character pitch <P> immediately before.

  If not set, the inter-character pitch will be of the same size as a narrow space and will become multiples of a narrow bar.
  e.g.)

Command	Ratio	Narrow space width	<P> specification	Gap between characters	
				Narrow bar width is [1]	Narrow bar width is [2]
<BT>	3:5	3	None	3	6
			<P>0	3	6
			<P>1	1	2
			<P>2	2	4
			<P>3	3	6
			<P>4	4	8

- If there is no Registration of Bar Width Ratio <BT>, barcode based on pre-registered bar width ratio of narrow and wide bars will be printed. Note that specification of <BT> is required beforehand to print.
- For print data of each barcode type, refer to the code tables of barcode.

[Notes]

- If the value other than valid range is set, command error will occur and barcode will not be printed.
- Barcode will be printed even if the data exceed the printable area.
- Increasing narrow bar width may exceed the printing area.
- Scanner may not read the barcode with valid character pitch when Character Pitch <P> is increased. Also, increasing the narrow bar width may cause the same type of problem. For more information, refer to the documentation of your scanner.
- For specifying the narrow bar width, consider the reading compatibility of scanner and head density beforehand.
- Adjust Print Speed <CS> or Print Darkness <#F> if there is a problem in barcode reading.
- Matrix 2of5 will be expressed as Coop2of5/NEC2of5.
- If Start/Stop character is not included in print data at the time of CODABAR (NW-7) or CODE39 specified, barcode will be printed; however, scanner cannot read it.

CODABAR (NW-7) Code table

							S				I					S			O	
				B8	0	0	0	0	0	0	0	0	1	1	1	1	1	1	1	1
				B7	0	0	0	0	1	1	1	1	0	0	0	0	1	1	1	1
				B6	0	0	1	1	0	0	1	1	0	0	1	1	0	0	1	1
				B5	0	1	0	1	0	1	0	1	0	1	0	1	0	1	0	1
B4	**B3**	**B2**	**B1**		**0**	**1**	**2**	**3**	**4**	**5**	**6**	**7**	**8**	**9**	**A**	**B**	**C**	**D**	**E**	**F**
0	0	0	0	**0**				0												
0	0	0	1	**1**				1	A		a									
0	0	1	0	**2**				2	B		b									
0	0	1	1	**3**				3	C		c									
0	1	0	0	**4**			$	4	D	T	d	t								
0	1	0	1	**5**				5	E		e									
0	1	1	0	**6**				6												
0	1	1	1	**7**				7												
1	0	0	0	**8**				8												
1	0	0	1	**9**				9												
1	0	1	0	**A**			*	:												
1	0	1	1	**B**			+													
1	1	0	0	**C**																
1	1	0	1	**D**			-													
1	1	1	0	**E**			.		N		n									
1	1	1	1	**F**			/													

- As a standard, 0x20 (SP) is not available, and no error will occur to this product and space will be printed due to the specification.
- Characters which can be used as Start/Stop characters are [A, B, C, D, E, N, T, a, b, c, d, e, n, t, *] in the code table.
- Characters [$, +, -, ., /, 0～9, :] can be used as print data.

CODE39 Code table

							S				I					S			O	
				B8	0	0	0	0	0	0	0	0	1	1	1	1	1	1	1	1
				B7	0	0	0	0	1	1	1	1	0	0	0	0	1	1	1	1
				B6	0	0	1	1	0	0	1	1	0	0	1	1	0	0	1	1
				B5	0	1	0	1	0	1	0	1	0	1	0	1	0	1	0	1
B4	**B3**	**B2**	**B1**		**0**	**1**	**2**	**3**	**4**	**5**	**6**	**7**	**8**	**9**	**A**	**B**	**C**	**D**	**E**	**F**
0	0	0	0	**0**			SP	0		P										
0	0	0	1	**1**				1	A	Q										
0	0	1	0	**2**				2	B	R										
0	0	1	1	**3**				3	C	S										
0	1	0	0	**4**			$	4	D	T										
0	1	0	1	**5**			%	5	E	U										
0	1	1	0	**6**				6	F	V										
0	1	1	1	**7**				7	G	W										
1	0	0	0	**8**				8	H	X										
1	0	0	1	**9**				9	I	Y										
1	0	1	0	**A**			*		J	Z										
1	0	1	1	**B**			+		K											
1	1	0	0	**C**					L											
1	1	0	1	**D**			-		M											
1	1	1	0	**E**			.		N											
1	1	1	1	**F**			/		O											

[ESC+BC] CODE93 Barcode

Hexadecimal code	ESC	BC	Parameter
	$<1B>_{16}$	$<42>_{16}<43>_{16}$	aabbbccn...n
Initial value	None		

Valid range and term of command	When the power is OFF	The set parameter is not maintained.
	Valid range within items	The set parameter becomes invalid.
	Valid range between items	The set parameter becomes invalid.

[Function]

Specifying CODE93 barcode.

[Format]

<BC>aabbbccn...n

- Parameter

  a [Narrow bar width] = Valid range : 01 to 36 dots
  b [Height of Barcode] = Valid Range : 001 to 999 dots
  c [Digit number of data] = Valid Range : 01 to 99
  n [Print data] = Barcode data (Refer to the CODE93 – Code Table.)

[Coding Example]

Narrow bar width: 02, Barcode height: 120, Number of digit: 12, Print data: ABCD123456xy

<A>
<V>100<H>200**<BC>0212012ABCD123456xy**
<Q>2
<Z>

[Supplementary Explanation]

- Check Digit is an auto-generation.
- Start Code <A> and Stop Code <Z> will be automatically added.
- Maximum entry digit number of data is 99.
- [Digit number of data] and number of input data have to be equal.
- Command error will occur when number of input data and [Digit number of data] are not matched.

CODE93 Code table

					S				I				S				O			
				B8	0	0	0	0	0	0	0	0	1	1	1	1	1	1	1	1
				B7	0	0	0	0	1	1	1	1	0	0	0	0	1	1	1	1
				B6	0	0	1	1	0	0	1	1	0	0	1	1	0	0	1	1
				B5	0	1	0	1	0	1	0	1	0	1	0	1	0	1	0	1
B4	**B3**	**B2**	**B1**		**0**	**1**	**2**	**3**	**4**	**5**	**6**	**7**	**8**	**9**	**A**	**B**	**C**	**D**	**E**	**F**
0	0	0	0	**0**			SP	0	@	P	`	p								
0	0	0	1	**1**			!	1	A	Q	a	q								
0	0	1	0	**2**			”	2	B	R	b	r								
0	0	1	1	**3**			#	3	C	S	c	s								
0	1	0	0	**4**			$	4	D	T	d	t								
0	1	0	1	**5**			%	5	E	U	e	u								
0	1	1	0	**6**			&	6	F	V	f	v								
0	1	1	1	**7**			’	7	G	W	g	w								
1	0	0	0	**8**			(	8	H	X	h	x								
1	0	0	1	**9**			)	9	I	Y	i	y								
1	0	1	0	**A**			*	:	J	Z	j	z								
1	0	1	1	**B**			+	;	K	[	k	{								
1	1	0	0	**C**			,	<	L	\	l	|								
1	1	0	1	**D**			-	=	M	]	m	}								
1	1	1	0	**E**			.	>	N	^	n	-								
1	1	1	1	**F**			/	?	O	__	o	DEL								

[00H to 7FH] can be available for CODE93.

[ESC+BF] UPC Add-on (Bookland)

Hexadecimal code	ESC	BF	Parameter
	$<1B>_{16}$	$<42>_{16}<46>_{16}$	aabbbn...n
Initial value	None		

Valid range and term of command	When the power is OFF	The set parameter is not maintained.
	Valid range within items	The set parameter becomes invalid.
	Valid range between items	The set parameter becomes invalid.

[Function]

Specifying UPC Add-on code (Bookland).

[Format]

<BF>aabbbn...n

- Parameter

  a [Narrow bar width] = Valid range : 01 to 36 dots
  b [Height of barcode] = Valid range : 001 to 999 dots
  n [Print data] = Numeric (0 to 9) : 2, 5 digits

[Coding Example]

Narrow bar: 03, Height of Barcode: 120

<A>
<H>325<V>725<BD>H0315009827721123
<H>640<V>760**<BF>0312021826**
<H>655<V>730<OB>21826
<Q>1
<Z>

[Supplementary Explanation]

- If specifying the value other than 2 and 5 digits, barcode will not be printed.
- Only numeric can be specified as print data. (Refer to code table.)
- No HRI
- When printed only UPC add-on <BF>, it cannot be scanned.

  Scan is available only when it is printed with UPC code.

UPC Add-on Barcode Code table

					S				I				S				O			
				B8	0	0	0	0	0	0	0	0	1	1	1	1	1	1	1	1
				B7	0	0	0	0	1	1	1	1	0	0	0	0	1	1	1	1
				B6	0	0	1	1	0	0	1	1	0	0	1	1	0	0	1	1
				B5	0	1	0	1	0	1	0	1	0	1	0	1	0	1	0	1
B4	**B3**	**B2**	**B1**		**0**	**1**	**2**	**3**	**4**	**5**	**6**	**7**	**8**	**9**	**A**	**B**	**C**	**D**	**E**	**F**
0	0	0	0	**0**				0												
0	0	0	1	**1**				1												
0	0	1	0	**2**				2												
0	0	1	1	**3**				3												
0	1	0	0	**4**				4												
0	1	0	1	**5**				5												
0	1	1	0	**6**				6												
0	1	1	1	**7**				7												
1	0	0	0	**8**				8												
1	0	0	1	**9**				9												
1	0	1	0	**A**																
1	0	1	1	**B**																
1	1	0	0	**C**																
1	1	0	1	**D**																
1	1	1	0	**E**																
1	1	1	1	**F**																

[ESC+BG] CODE128 (128A, 128B, 128C) Barcode

Hexadecimal code	ESC	BG	Parameter
	<1B>$_{16}$	<42>$_{16}$<47>$_{16}$	aabbbn...n
Initial value	None		

Valid range and term of command	When the power is OFF	The set parameter is not maintained.
	Valid range within items	The set parameter becomes invalid.
	Valid range between items	The set parameter becomes invalid.

[Function]

Specifying CODE128 barcode.

[Format]

<BG>aabbbn...n

- Parameter

  a [Narrow bar width] = Valid range : 01 to 36 dots
  b [Height of Barcode] = Valid Range : 001 to 999 dots
  n [Print data] = Barcode data (Refer to the CODE128 – Code Table.)

[Coding Example]

Narrow bar width: 02, Barcode height: 120, Print data: ABCD123456 (Start character A)

<A>
<V>100<H>200**<BG>02120>GABCD123456**
<Q>2
<Z>

[Supplementary Explanation]

- Specify [START CODE] at the head of print data.
  - START CODE A = [>G]
  - START CODE B = [>H]
  - START CODE C = [>I]
- C/D is an auto-generation.
- About "START CODE";
  - When using "START CODE C," specify print data in even-numbered digit.
  - When "START CODE C" is set to print data in odd-number digit, specify "START CODE A" or "B" to change the first one character of print data. And then specify the rest of data with "Code Set Character C" to change it to even-numbered digit.

    e.g.1) 15 digits [123456789012345] : <B>1<C>23456789012345
    e.g.2) 9 digits / Alphanumeric 6 digits [123456789ABC123] : <C>12345678<B>9ABC123
  - When odd digits are specified with START CODE C, the behavior changes depending on the settings of this product.

- Prints with 0 (zero) added to the last digit of the print data when Settings menu -> [Application] menu -> [SBPL] menu -> [Compatible] -> [CODE128(C) Zero Fill] is enabled from menu.
- Settings menu -> [Application] menu -> [SBPL] menu -> [Compatible] -> [CODE128(C) Zero Fill] is disabled.

◦ When start character is omitted, data will be printed with "START CODE B."

CODE128 Code table

VALUE	Code A	Code B	Code C
0	SP	SP	00
1	!	!	01
2	”	”	02
3	#	#	03
4	$	$	04
5	%	%	05
6	&	&	06
7	’	’	07
8	(	(	08
9	)	)	09
10	*	*	10
11	+	+	11
12	,	,	12
13	−	−	13
14	.	.	14
15	/	/	15
16	0	0	16
17	1	1	17
18	2	2	18
19	3	3	19
20	4	4	20
21	5	5	21
22	6	6	22
23	7	7	23
24	8	8	24
25	9	9	25
26	:	:	26
27	;	;	27
28	<	<	28
29	=	=	29
30	>(注意 4.)	>(注意 4.)	30
31	？	？	31
32	@	@	32
33	A	A	33
34	B	B	34
35	C	C	35
36	D	D	36
37	E	E	37
38	F	F	38
39	G	G	39
40	H	H	40
41	I	I	41
42	J	J	42
43	K	K	43
44	L	L	44
45	M	M	45
46	N	N	46
47	O	O	47
48	P	P	48
49	Q	Q	49
50	R	R	50
51	S	S	51
52	T	T	52
53	U	U	53
54	V	V	54

VALUE	Code A	Code B	Code C
55	W	W	55
56	X	X	56
57	Y	Y	57
58	Z	Z	58
59	[	[	59
60	＼	＼	60
61	]	]	61
62	^	^	62
63	_	_	63
64	NUL >SP	‘	64
65	SOH >!	a	65
66	STX >”	b	66
67	ETX >#	c	67
68	EOT >$	d	68
69	ENQ >%	e	69
70	ACK >&	f	70
71	BEL >’	g	71
72	BS >(	h	72
73	HT >)	i	73
74	LF >*	j	74
75	VT >+	k	75
76	FF >,	l	76
77	CR >-	m	77
78	SO >.	n	78
79	SI >/	o	79
80	DLE >0	p	80
81	DC1 >1	q	81
82	DC2 >2	r	82
83	DC3 >3	s	83
84	DC4 >4	t	84
85	NAK >5	u	85
86	SYN >6	v	86
87	ETB >7	w	87
88	CAN >8	x	88
89	EM >9	y	89
90	SUB >:	z	90
91	ESC >;	{	91
92	FS ><	|	92
93	GS >=	}	93
94	RS >>	～	94
95	US >?	DEL >?	95
96	FNC3 >@	FNC3 >@	96
97	FNC2 >A	FNC2 >A	97
98	SHIFT >B	SHIFT >B	98
99	Code-C >C	Code-C >C	99
100	Code-B >D	FNC4 >D	Code-B >D
101	FNC4 >E	Code-A >E	Code-A >E
102	FNC1 >F	FNC1 >F	FNC1 >F
103	START CODE A >G		
104	B >H		
105	C >I		

Note

- If START character (start code) is omitted, it works as code B, but 2-byte characters cannot be specified.
- STOP character (stop code) is added in this product automatically.
- Code after VALUE64 in Code A and Code B should be specified as 2 character code with ">” attached.
- Specification code for ">" is ">J.”

[ESC+BI] GS1-128 (UCC/EAN128) (Standard Carton ID Only)

Hexadecimal code	ESC	BI	Parameter
	$<1B>_{16}$	$<42>_{16}<49>_{16}$	aabbbcn...n
Initial value	None		

Valid range and term of command	When the power is OFF	The set parameter is not maintained.
	Valid range within items	The set parameter becomes invalid.
	Valid range between items	The set parameter becomes invalid.

[Function]

Specifying GS1-128 (UCC/EAN128) barcode for Standard Carton ID.

[Format]

<BI>aabbbcn...n

- Parameter

a [Narrow bar width] = Valid range : 01 to 36 dots
b [Height of Barcode] = Valid Range : 001 to 999 dots
c [Barcode expository font specification]
0: No HRI
1: HRI is available (Upper part of barcode)
2: HRI is available (Under part of barcode)
n [Print data] = Barcode data (Fixed 17 digits)

For barcode data, refer to the GS1-128 (UCC/EAN128) code table.
EAN128 (Barcode for Standard Carton ID)

- Identifier of a continuous code for freight packaging
- Type of packaging
- Country/manufacturer code
- Serial No. for shipping container
- Check digit

Note that check digit is automatically added; therefore, specify data in 17 digits excluding check digit.

[Coding Example]

Narrow bar width: 05, Height of barcode: 080, HRI: Available (Under part of barcode), Print data: 12345678901234567

<A>
<V>100<H>200**<BI>0508021234567890123456 7**
<Q>2
<Z>

[Supplementary Explanation]

- UCC128 code is exclusive to Standard Carton ID. When printing in EAN128, designed for the markets in the medical, fresh food, or flowers and plants, use CODE128 Barcode <BG> to specify print data with application identification or separator that matches each specification.
- Start character code, function character, end character code, and identification code (corresponds to [00] only) are added automatically.
- Modulus 10 check character and modulus 103 check character are automatically generated.
- Sequential number of barcode data is available.
- Line pitch between barcode and expository font is fixed at 10 dots.
- If the width of expository font is wider than that of barcode, it starts printing from the print start position of barcode.
- If the width of expository font is narrower than that of barcode, expository font will be aligned to the center of barcode for printing.
- Prints expository font in OCR-B.
- If expository font is outside of printing area, it will not be printed. When selecting [HRI is available], specify Vertical Print Position <V> and Horizontal Print Position <H> in consideration of print of expository font.
- If the bar code commentary font specification to specify other than 0, 1, 2, operation is the same as the bar code commentary font specified 0.

ITF, Matrix 2of5, Industrial 2of5, UPC-A, JAN/EAN8, JAN/EAN13, UPC-E, GS1-128 (UCC/EAN128), MSI Code table

								S			I					S			O	
				B8	0	0	0	0	0	0	0	0	1	1	1	1	1	1	1	1
				B7	0	0	0	0	1	1	1	1	0	0	0	0	1	1	1	1
				B6	0	0	1	1	0	0	1	1	0	0	1	1	0	0	1	1
				B5	0	1	0	1	0	1	0	1	0	1	0	1	0	1	0	1
B4	**B3**	**B2**	**B1**		**0**	**1**	**2**	**3**	**4**	**5**	**6**	**7**	**8**	**9**	**A**	**B**	**C**	**D**	**E**	**F**
0	0	0	0	**0**				0												
0	0	0	1	**1**				1												
0	0	1	0	**2**				2												
0	0	1	1	**3**				3												
0	1	0	0	**4**				4												
0	1	0	1	**5**				5												
0	1	1	0	**6**				6												
0	1	1	1	**7**				7												
1	0	0	0	**8**				8												
1	0	0	1	**9**				9												
1	0	1	0	**A**																
1	0	1	1	**B**																
1	1	0	0	**C**																
1	1	0	1	**D**																
1	1	1	0	**E**																
1	1	1	1	**F**																

[ESC+BP] POSTNET

Hexadecimal code	ESC	BP	Parameter
	<1B>$_{16}$	<42>$_{16}$<50>$_{16}$	n...n
Initial value	None		

Valid range and term of command	When the power is OFF	The set parameter is not maintained.
	Valid range within items	The set parameter becomes invalid.
	Valid range between items	The set parameter becomes invalid.

[Function]

Specifying POSTNET barcode.

[Format]

<BP>n...n

- Parameter

  n = Print data (Refer to the POSTNET Code Table)
  Note that the digits other than specified below are not allowed.
  - 5 digits (POSTNET-32 format)
  - 6 digits (POSTNET-37 format)
  - 9 digits (POSTNET-52 format)
  - 11 digits (POSTNET-62 Delivery Point format)

[Coding Example]

Postal code: 11 digits: 01234567890

<A>
<V>100<H>200**<BP>01234567890**
<Q>2
<Z>

[Supplementary Explanation]

- If specifying the value other than 5, 6, 9, and 11 digits for print data, it will be ignored.
- Only numeric can be specified as print data.

POSTNET Code table

					S				I				S				O			
				B8	0	0	0	0	0	0	0	0	1	1	1	1	1	1	1	1
				B7	0	0	0	0	1	1	1	1	0	0	0	0	1	1	1	1
				B6	0	0	1	1	0	0	1	1	0	0	1	1	0	0	1	1
				B5	0	1	0	1	0	1	0	1	0	1	0	1	0	1	0	1
B4	**B3**	**B2**	**B1**		**0**	**1**	**2**	**3**	**4**	**5**	**6**	**7**	**8**	**9**	**A**	**B**	**C**	**D**	**E**	**F**
0	0	0	0	**0**				0												
0	0	0	1	**1**				1												
0	0	1	0	**2**				2												
0	0	1	1	**3**				3												
0	1	0	0	**4**				4												
0	1	0	1	**5**				5												
0	1	1	0	**6**				6												
0	1	1	1	**7**				7												
1	0	0	0	**8**				8												
1	0	0	1	**9**				9												
1	0	1	0	**A**																
1	0	1	1	**B**																
1	1	0	0	**C**																
1	1	0	1	**D**																
1	1	1	0	**E**																
1	1	1	1	**F**																

[ESC+BS] USPS Barcode

Hexadecimal code	ESC	BS	Parameter
	<1B>$_{16}$	<42>$_{16}$<53>$_{16}$	aabbbcccccccdddddddd(e...e)
Initial value	None		

Valid range and term of command	When the power is OFF	The set parameter is not maintained.
	Valid range within items	The set parameter becomes invalid.
	Valid range between items	The set parameter becomes invalid.

[Function]

Printing USPS code.

[Format]

<BS>aabbbcccccccdddddddd(e...e)

- Parameter

a [Barcode ID] = Fixed 2 digits
Note: 0 to 4 should be specified for the 2nd digit.
b [Service Type ID] = Fixed 3 digits
c [Mailer ID] = Fixed 6 digits
d [Serial Number] = Fixed 9 digits
e [Routing Code] = Fixed 5 digits or fixed 9 digits or fixed 11 digits(can be omitted)

[Coding Example]

Barcode ID: 53, Service Type ID: 379, Customer Identifier: 777234, Serial Number: 994544928, Routing Code: 51135759461

<A>
<V>100<H>200**<BS>53379777234994544928511357594 61**
<Q>1
<Z>

[Supplementary Explanation]

- For available parameter, refer to USPS code table in next page.

USPS Code table

					S				I				S				O			
				B8	0	0	0	0	0	0	0	0	1	1	1	1	1	1	1	1
				B7	0	0	0	0	1	1	1	1	0	0	0	0	1	1	1	1
				B6	0	0	1	1	0	0	1	1	0	0	1	1	0	0	1	1
				B5	0	1	0	1	0	1	0	1	0	1	0	1	0	1	0	1
B4	**B3**	**B2**	**B1**		**0**	**1**	**2**	**3**	**4**	**5**	**6**	**7**	**8**	**9**	**A**	**B**	**C**	**D**	**E**	**F**
0	0	0	0	**0**				0												
0	0	0	1	**1**				1												
0	0	1	0	**2**				2												
0	0	1	1	**3**				3												
0	1	0	0	**4**				4												
0	1	0	1	**5**				5												
0	1	1	0	**6**				6												
0	1	1	1	**7**				7												
1	0	0	0	**8**				8												
1	0	0	1	**9**				9												
1	0	1	0	**A**																
1	0	1	1	**B**																
1	1	0	0	**C**																
1	1	0	1	**D**																
1	1	1	0	**E**																
1	1	1	1	**F**																

[ESC+EU] Composite Symbol

Hexadecimal code	ESC	EU	Parameter
	<1B>$_{16}$	<45>$_{16}$<55>$_{16}$	aabbccn...n aabbcccn...n
Initial value	None		

Valid range and term of command	When the power is OFF	The set parameter is not maintained.
	Valid range within items	The set parameter becomes invalid.
	Valid range between items	The set parameter becomes invalid.

[Function]

Specifying the composite symbol of EAN and UCC.

[Format 1]

<EU>aabbccn...n

- Parameter

a [Type of composite symbol]
01 : GS1 DataBar Composite (CC-A/CC-B)
02 : GS1 DataBar Truncated Composite (CC-A/CC-B)
03 : GS1 DataBar Stacked Composite (CC-A/CC-B)
04 : GS1 DataBar Stacked Omni-Directional (CC-A/CC-B)
05 : GS1 DataBar Limited Composite (CC-A/CC-B)
06 : GS1 DataBar Expanded Composite (CC-A/CC-B)
/GS1 DataBar Expanded Stacked (CC-A/CC-B)
07 : UPC-A Composite (CC-A/CC-B)
08 : UPC-E Composite (CC-A/CC-B)
09 : EAN13 Composite (CC-A/CC-B)
10 : EAN8 Composite (CC-A/CC-B)
b [Narrow bar] = 01 to 12 dots
c [Segment width] = 02 to 22 (Even number only)
* Only GS1 DataBar Expanded Composite (CC-A/CC-B) are supported.
n [Print data] = Data

Maximum number of digit for 1D barcode data

GS1 DataBar Composite (CC-A/CC-B)	13 digits
GS1 DataBar Truncated Composite (CC-A/CC-B)	13 digits
GS1 DataBar Stacked Composite (CC-A/CC-B)	13 digits
GS1 DataBar Stacked Omni-Directional (CC-A/CC-B)	13 digits
GS1 DataBar Limited Composite (CC-A/CC-B)	13 digits
GS1 DataBar Expanded Composite (CC-A/CC-B) /GS1 DataBar Expanded Stacked (CC-A/CC-B)	74 digits
UPC-A Composite (CC-A/CC-B)	11 digits
UPC-E Composite (CC-A/CC-B) Specify with "XX00000XXX" (X: variable) format.	Fixed 10 digits
EAN13 Composite (CC-A/CC-B)	12 digits
EAN8 Composite (CC-A/CC-B)	7 digits

- Check digit is automatically calculated and added.
- To specify the print of composite symbol, delimit one-dimensional data and two-dimensional data with '|' (7Ch).

  Data = One-dimensional data | Two-dimensional data
- Data of GS1 DataBar Composite (CC-A/CC-B) are needed to be specified between the 1st and 16th digit of GS1 DataBar Expanded Composite (CC-A/CC-B) data.
- GS1 DataBar Expanded Composite (CC-A/CC-B) can contain GS1 DataBar Composite (CC-A/CC-B) data and 74 digits of numeric character and 41 digits of alphabet.

  (When numeric characters and alphabets are mixed, GS1 DataBar Composite (CC-A/CCB) data and 41 digit characters can be specified.)
  Ex 1) AI(01)+Product ID code 4912345000019+AI(15)+ Best before date is set at 30.Nov.2012:
  (01)04912345000019(15)121130
  Ex 2) AI(01)+Product ID code 4912345000019+AI(17)+Expiration date is set at 31.Jan.2013+AI(10)+lot # ABC123:
  (01)04912345000019(17)20130131(10)ABC123
- When specified data do not reach the maximum digits, blank is filled by zero.
- 2D data can contain up to 338 digits, but it varies by the type of Barcode.
- Barcode may stick out of the label depending on data and the number of digit, and scanner cannot read it. Adjust print data beforehand so that the barcode can fit to the label.
- For UPC-A Composite, you can only specify 11 digits for data entry, however when 12 digits is specified for the compatibility purpose, EAN13 Composite (CC-A/CC-B) is generated.

[Format 2]

<EU>aabbcccn...n

- Parameter

  a [One-dimensional barcode type]
  11 : GS1-128 Composite (CC-A/CC-B)
  12 : GS1-128 Composite (CC-C)
  b [Minimum bar width] = 01 to 12 dots
  c [Barcode height] = 001 to 500 dots
  * Specify barcode height when minimum bar width is "01."
  * When specifying minimum bar width "03," Barcode height "100," Barcode height become 300 dots.
  n [Print data] = Data

  Maximum number of digits that can specify by merging 1D and 2D (There is a limit for the maximum number of digits of 1D data.)

GS1-128 (UCC/EAN128) with CC-A/B	338 digits
GS1-128 (UCC/EAN128) with CC-C	2324 digits

  Maximum number of digits that can specify 1D data

GS1-128 (UCC/EAN128) with CC-A/B	48 digits
GS1-128 (UCC/EAN128) with CC-C	48 digits

  - To specify the print of composite symbol, delimit one-dimensional data and two-dimensional data with '|' (7Ch).

    Data = One-dimensional data | Two-dimensional data
  - Use '#'(23H) to specify CC-A/B (Micro PDF), FNC1 (GS) of CC-C (for PDF417) as data.

- 2D data for GS1-128 (UCC/EAN128) With CC-A/B can contain up to 338 digits.
- Barcode part of GS1-128 Composite is GS1-128 (UCC/EAN128).
- When 2D data of GS1-128 (UCC/EAN128) with CC-A/B are less than 56 digits, it is identified as CC-A, and identified as CC-B when data size is between 57 digits and 338 digits automatically.
- The number of digits varies depending on the width of the barcode in GS1-128 (UCC/EAN128) With CC-C, and the maximum number of digits of combination of the 1D and 2D is 2372 digits.

[Coding Example 1]

GS1 DataBar Composite (CC-A/CC-B)

<A>
<V>100<H>100
<EU>01040361234567890|11990102
<Q>1
<Z>

[Coding Example 2]

GS1 DataBar Truncated Composite (CC-A/CC-B)

<A>
<V>100<H>100
<EU>02040361234567890|11990102
<Q>1
<Z>

[Coding Example 3]

GS1 DataBar Stacked Composite (CC-A/CC-B)

<A>
<V>100<H>100
<EU>03040341234567890|17010200
<Q>1
<Z>

[Coding Example 4]

GS1 DataBar Stacked Omni-Directional (CC-A/CC-B)

<A>
<V>100<H>100
<EU>04040341234567890|17010200
<Q>1
<Z>

[Coding Example 5]

GS1 DataBar Limited Composite (CC-A/CC-B)

<A>
<V>100<H>100 **<EU>05040351234567890|21ABCDEFGHIJKLMNOPQRSTUV**
<Q>1
<Z>

[Coding Example 6]

GS1 DataBar Expanded Composite(CC-A/CC-B)

<A>
<V>100<H>100
<EU>0605220104912345678904
<Q>1
<Z>

[Coding Example 7]

GS1 DataBar Expanded Stacked(CC-A/CC-B)

<A>
<V>100<H>100
<EU>0605020104912345678904
<Q>1
<Z>

[Coding Example 8]

UPC-A Composite (CC-A/CC-B)

<A>
<V>100<H>100
<EU>0704331234567890|991234-abcd
<Q>1
<Z>

[Coding Example 9]

UPC-E Composite (CC-A/CC-B)

<A>
<V>100<H>100
<EU>08041200000123|15021231
<Q>1
<Z>

[Coding Example 10]

EAN13 Composite (CC-A/CC-B)

<A>
<V>100<H>100
<EU>0904331234567890|991234-abcd
<Q>1
<Z>

[Coding Example 11]

EAN8 Composite (CC-A/CC-B)

<A>
<V>100<H>100
<EU>10041234567|21A12345678
<Q>1

<Z>

[Coding Example 12]

GS1-128 Composite (CC-A/CC-B)

<A>
<V>100<H>100
<EU>110402601032123456789 06|21A1B2C3D4E5F6G7H8
<Q>1
<Z>

[Coding Example 13]

GS1-128 Composite (CC-C)

<A>
<V>100<H>100
<EU>120402600030123456789012340|02130123456789
093724#101234567ABCDEFG
<Q>1
<Z>

[Supplementary Explanation]

- Parameter varies depending on one-dimensional barcode type. Segment width can be specified only for DataBar Expanded Composite (CC-A/CC-B) (EU06). Barcode height can be specified only for GS1-128 (UCC/EAN-128) (EU11, EU12).
- If the value is not set to the data portion, composite symbol will not be printed.
- Parameter for print data is available up to 2361 digits including 1D barcode data and 2D barcode data as a specification for this command. Available number for 2D barcode data varies depending on the type of 1D barcode and/or mixture of alphabets and number. When specified data exceed the maximum digits, barcode may not be printed properly.
- Entire size of composite symbol changes depending on the specification of narrow bar width.
- If composite symbol exceeds the printing area, only the portion located within the area will be printed. Also, a scanner might read the value of such composite symbol occasionally.
- Height and width of 2D barcode of the composite symbol is adjusted by 1D barcode data size. When the width of 1D barcode is narrow, it cannot be printed even the size of data is less than the maximum number of digit.
- Print of HRI cannot be designated with this command.
- Rotation <%> is available, and Enlargement <L> is invalid.
- When specifying 11 (production date), 12 (term of payment), 13 (packing date), 15 (sales period), 17 (warranty period) for application identifier, set correct data YYMMDD. When the incorrect date is set, print result is not guaranteed.
- When specifying GS1 DataBar as a barcode type, specify 2D Barcode data with the format based on application identifier.
- GS1 DataBar Expanded Composite (CC-A/CC-B) is stacked automatically by segment width and data size and printed as GS1 DataBar Expanded Stacked (CC-A/CC-B).

- Barcode generation module has been modified for improvement. How the generated image looks may differ due to the change, however the read result is the same.

Code table for Composite Symbol 2D Barcode

							S			I						S			O	
				B8	0	0	0	0	0	0	0	0	1	1	1	1	1	1	1	1
				B7	0	0	0	0	1	1	1	1	0	0	0	0	1	1	1	1
				B6	0	0	1	1	0	0	1	1	0	0	1	1	0	0	1	1
				B5	0	1	0	1	0	1	0	1	0	1	0	1	0	1	0	1
B4	**B3**	**B2**	**B1**		**0**	**1**	**2**	**3**	**4**	**5**	**6**	**7**	**8**	**9**	**A**	**B**	**C**	**D**	**E**	**F**
0	0	0	0	**0**			SP	0		P		p								
0	0	0	1	**1**			!	1	A	Q	a	q								
0	0	1	0	**2**			”	2	B	R	b	r								
0	0	1	1	**3**				3	C	S	c	s								
0	1	0	0	**4**				4	D	T	d	t								
0	1	0	1	**5**			%	5	E	U	e	u								
0	1	1	0	**6**			&	6	F	V	f	v								
0	1	1	1	**7**			’	7	G	W	g	w								
1	0	0	0	**8**			(	8	H	X	h	x								
1	0	0	1	**9**			)	9	I	Y	i	y								
1	0	1	0	**A**			*	:	J	Z	j	z								
1	0	1	1	**B**			+	;	K		k									
1	1	0	0	**C**			,	<	L		l									
1	1	0	1	**D**			-	=	M		m									
1	1	1	0	**E**			.	>	N		n									
1	1	1	1	**F**			/	?	O	__	o									

* Use ‘#’(23H) for specifying FNC1.

[ESC+BL] UPC-A Barcode (Without HRI)

Hexadecimal code	ESC	BL	Parameter
	$<1B>_{16}$	$<42>_{16}<4C>_{16}$	abbcccn...n
Initial value	None		

Valid range and term of command	When the power is OFF	The set parameter is not maintained.
	Valid range within items	The set parameter becomes invalid.
	Valid range between items	The set parameter becomes invalid.

[Function]

Set the height of character barcode of the first digit and the last digit to the same height of the guard bar.

[Format]

<BL>abbcccn...n

- Parameter

  a [Barcode type] = H : UPC-A(Fixed ‘H’)
  b [Narrow bar width] = Valid range : 01 to 36 dots
  c [Height of Barcode] = Valid Range : 001 to 999 dots
  n [Print data] = Data : 11 fixed digits

[Coding Example]

Barcode type: UPC-A, Narrow bar width: 03, Height of barcode: 120, Print data: 01234567890

<A>
<H>100<V>100**<BL>H0312001234567890**
<Q>2
<Z>

[Supplementary Explanation]

- This command supports UPC-A only. When barcode type is specified other than "H," command error occurs.
- Setting of Guard bar, HRI and ratio is described as follows.

  Guard bar: Available
  HRI: Nil
  Ratio: Fix
- When the parameter value exceeds the range, operation is not supported.
- When printing UPC-A with <D>, all character barcodes have the same height. When <BL> is used, the height of the character barcode of the start digit and the last digit have the same height of the guard bar.

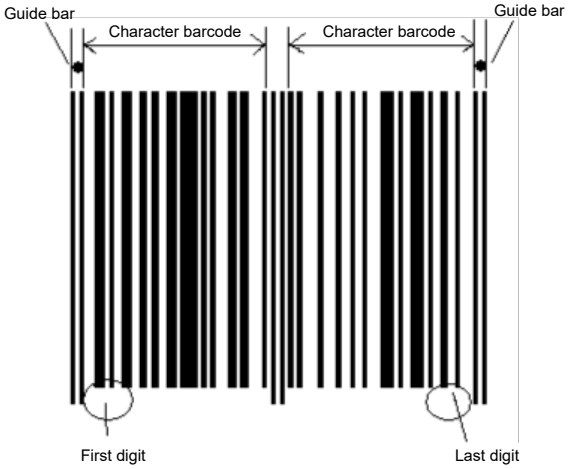

UPC-A specifying <D>

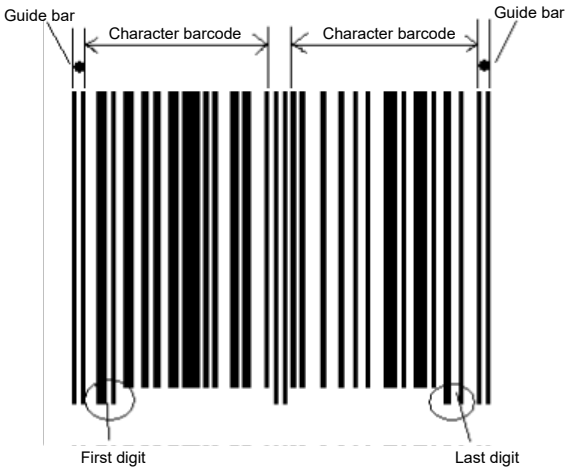

UPC-A specifying <BL>

[ESC+BL] ~ [ESC+d] UPC-A Barcode (Specifying HRI)

Hexadecimal code	ESC	BL～d	Parameter
	<1B>$_{16}$	<42>$_{16}$<4C>$_{16}$ ~ character type	abbcccn...n ~ <d>n...n
Initial value	None		

Valid range and term of command	When the power is OFF	The set parameter is not maintained.
	Valid range within items	The set parameter becomes invalid.
	Valid range between items	The set parameter becomes invalid.

[Function]

Set the height of character barcode of the first digit and the last digit to the same height of the guard bar.

[Format]

<BL>abbcccn...n～<d>n...n

- Parameter

a [Barcode type] = H : UPC-A (Fixed ‘H’)
b [Narrow bar width] = Valid range : 01 to 36 dots
c [Height of barcode] = Valid range : 001 to 999 dots
n [Print data] = Data : Fixed 11 digit
d [Font type]
OA
OB
XU
XS
XM
XB
XL
U
S
M
WB
WL
n [Print data] = HRI data : fixed 12 digits

[Coding Example]

Barcode type: UPC-A, Narrow bar width: 02, Barcode height: 120, Barcode data: 01234567890, Font type: XS, HRI data: 01234567890

<A>
<H>100<V>100**<BL>H0212001234567890**
<XS>01234567890
<Q>2
<Z>

[Supplementary Explanation]

- This command supports UPC-A only. When barcode type is specified other than "H," command error occurs.
- Recommended to specify [02] or [03] for the narrow bar width.
- Check digit (12th digit) for HRI data should be set the calculation result of modulus 10.
- Setting of Guard bar, HRI and ratio is described as follows.

  Guard bar: Available
  HRI: Available
  Ratio: Fix
- When the parameter value exceeds the range, operation is not supported.
- If barcode with human readable text has errors, the human readable text is printed in a normal font.
- All character barcode have the same height when printing UPC-A specifying <D> and then <font>. The first and the last character barcode have the same height to the guard bar when printing UPC-A specifying <BL> and then <font>. When printing UPC-A specifying <D> and <font>, HRI can be printed under the first digit and the last digit because the height of the first digit and the last digit of the barcode is low. When printing UPC-A specifying <BL> and <font>, the height of the first digit and the last digit of the barcode is high, and the font interval is narrower than previous case.

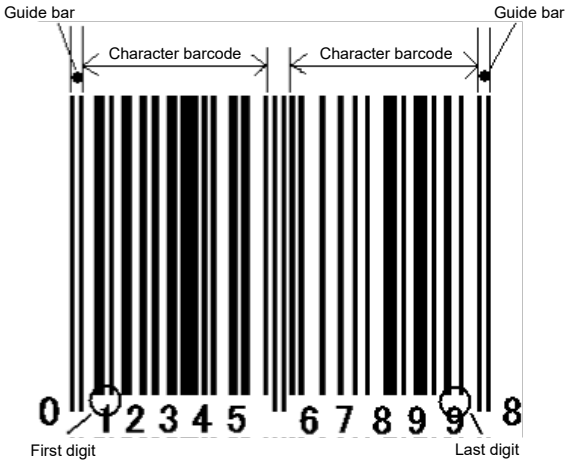

UPC-A specifying <D> + <font>

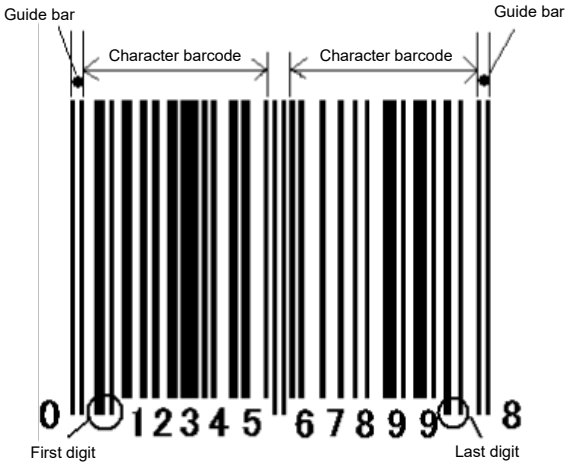

UPC-A specifying <BL> + <font>

[ESC+BM] UPC-A Barcode (With HRI)

Hexadecimal code	ESC	BM	Parameter
	<1B>$_{16}$	<42>$_{16}$<4D>$_{16}$	abbcccn...n
Initial value	None		

Valid range and term of command	When the power is OFF	The set parameter is not maintained.
	Valid range within items	The set parameter becomes invalid.
	Valid range between items	The set parameter becomes invalid.

[Function]

Set the height of character barcode of the first digit and the last digit to the same height of the guard bar.

[Format]

<BM>abbcccn...n

- Parameter

  a [Barcode type] = H : UPC-A(Fixed ‘H’)
  b [Narrow bar width] = Valid range : 01 to 36 dots
  c [Height of Barcode] = Valid Range : 001 to 999 dots
  n [Print data] = Data : 11 fixed digits

[Coding Example]

Barcode type: UPC-A, Narrow bar width: 02, Height of barcode: 120, Print data: 20123948573

<A>
<H>100<V>100**<BM>H0212020123948573**
<Q>2
<Z>

[Supplementary Explanation]

- This command supports UPC-A only. When barcode type is specified other than "H," command error occurs.
- HRI needs following conditions;

  203 dpi (8 dots /mm) : Set Narrow bar width to [02] or [03]
  305 dpi (12 dots/mm) : Set Narrow bar width to [03] or [04]
  609 dpi (24 dots/mm) : Set Narrow bar width to [06] or [07] or [08]
  HRI will not be printed if the value other than the listed above is specified.
- Setting of Guard bar, HRI and ratio is described as follows.

  Guard bar: Available
  HRI: Available
  Ratio: Fix
- When the parameter value exceeds the range, operation is not supported.
- When printing UPC-A with <BD>, all character barcodes have the same height. When <BM> is used, the height of the character barcode of the start digit and the last digit have the same height of the guard bar. When printing UPC-A with <BD>, HRI can be printed under the first digit and the last digit because the height of the first digit and the last digit of the barcode is low. When printing UPC-A specifying <BM>, the height of the first digit and the last digit of the barcode is high, and the font interval is narrower than previous case.

UPC-A specifying <BD>

UPC-A specifying <BM>

2D Codes

[ESC+2D10] PDF417

Hexadecimal code	ESC	2D10	Parameter
	<1B>$_{16}$	<32>$_{16}$<44>$_{16}$ <31>$_{16}$ <30>$_{16}$	,aa,bb,c,dd,ee(,f)
Initial value	None		

Valid range and term of command	When the power is OFF	The set parameter is not maintained.
	Valid range within items	The set parameter becomes invalid.
	Valid range between items	The set parameter becomes invalid.

[Function]

Specifying PDF417.

[Format] (Setup part)

<2D10>,aa,bb,c,dd,ee(,f)

- Parameter

a [Minimum module width] = Valid Range : 01 to 27 dots
b [Minimum module height] = Valid Range : 01 to 72 dots
c [Security level] = Valid Range : 0 to 8
d [Number of data code words per one line]
Valid Range : 01 to 30
00 : Automatic (Width varies depending on number of data)
e [Number of line per symbol]
Valid Range : 03 to 90
00 : Automatic (Height varies depending on number of data)
f [Code type]
0 : Normal, When omitted 0(can be omitted)
1 : Truncated

[Format] (Data part)

<DN>mmmm,n...n

- Parameter

m [Number of data] = Valid Range : 1 to 2681 bytes
n [Print data] = Data

[Coding Example 1]

Minimum module width: 03 dots, Minimum module height: 09 dots, Security level: 3, Number of data code words per line: 03, Number of line per symbol: 18

<A>
<V>100<H>200**<2D10>,03,09,3,03,18**
<DN>0010,0123456789
<Q>2
<Z>

[Coding Example 2]

Minimum module width: 03 dots, Minimum module height: 09 dots, Security level: 3, Number of data code words per line: 03, Number of line per symbol: 18, Code type: Truncated

<A>
<V>100<H>200**<2D10>,03,09,3,03,18,1**
<DN>0010,0123456789
<Q>2
<Z>

[Supplementary Explanation]

- Base print position of PDF417 is specified by Vertical Print Position <V> and Horizontal Print Position <H>.

  <V>100<H>200<2D10>***. . . . . **

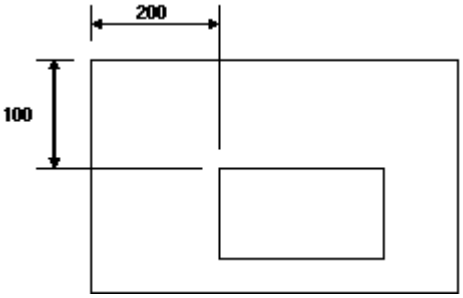

- When d=e=00, aspect ratio will be at 1:2 based on the number of print data.
- When parameter d and e does not match number of data, print may not be performed properly.
- When setting security level high, parameter d or e should have large number.
- Recommended to specify 2 dots or more for 8 dots/mm and 12 dots/mm printhead and 4 dots or more for 24 dots/mm printhead because the minimum module width and minimum module height of QR code may not be read by the scanner.
- Barcode generation module has been modified for improvement. How the generated image looks may differ due to the change, however the read result is the same.
- According to a specifying symbol size, higher security level than specified security level may be set.
- PDF417 module may raise the security level up when there is an empty space in PDF417 barcode.

[Points]

- Sequential number is not available.
- Specifying print position by automatic line feed is not available.
- Print 00H to FFH is available.
- Format registration is available.
- Enlarging minimum module size improves print quality.
- Increasing security level improves read rate.
- Print height varies depending on the character such as numeric only, alphabet only or mixture of numeric and alphabets.

PDF417 Code table

					S				I				S				O			
				B8	0	0	0	0	0	0	0	0	1	1	1	1	1	1	1	1
				B7	0	0	0	0	1	1	1	1	0	0	0	0	1	1	1	1
				B6	0	0	1	1	0	0	1	1	0	0	1	1	0	0	1	1
				B5	0	1	0	1	0	1	0	1	0	1	0	1	0	1	0	1
B4	B3	B2	B1		0	1	2	3	4	5	6	7	8	9	A	B	C	D	E	F
0	0	0	0	0			SP	0	@	P	`	p								
0	0	0	1	1			!	1	A	Q	a	q								
0	0	1	0	2			″	2	B	R	b	r								
0	0	1	1	3			#	3	C	S	c	s								
0	1	0	0	4			$	4	D	T	d	t								
0	1	0	1	5			%	5	E	U	e	u								
0	1	1	0	6			&	6	F	V	f	v								
0	1	1	1	7			’	7	G	W	g	w								
1	0	0	0	8			(	8	H	X	h	x								
1	0	0	1	9			)	9	I	Y	i	y								
1	0	1	0	A			*	:	J	Z	j	z								
1	0	1	1	B			+	;	K	[	k	{								
1	1	0	0	C			,	<	L	¥	l	|								
1	1	0	1	D			−	=	M	]	m	}								
1	1	1	0	E			.	>	N	^	n	~								
1	1	1	1	F			/	?	O	_	o	DEL								

PDF417 can specify from 00H to FFH.

[ESC+2D12] Micro PDF417

Hexadecimal code	ESC	2D12	Parameter
	$<1B>_{16}$	$<32>_{16}<44>_{16}$ $<31>_{16}$ $<32>_{16}$	,aa,bb,c,dd(,e)
Initial value	None		

Valid range and term of command	When the power is OFF	The set parameter is not maintained.
	Valid range within items	The set parameter becomes invalid.
	Valid range between items	The set parameter becomes invalid.

[Function]

Specifying Micro PDF417.

[Format] (Setup part)

<2D12>,aa,bb,c,dd(,e)

- Parameter

a [Minimum module width] = Valid Range : 01 to 27 dots
b [Minimum module height] = Valid Range : 01 to 72 dots
c [Number of data code words per row] (Cols) = Valid Range : 1 to 4
d [Number of rows per symbol] (Rows) = Valid Range : 2 rows
e [Binary mode]
0 : Normal, When omitted 0 (Can be omitted)
1 : Binary mode

[Format] (Data part)

<DN>mmmm,n...n : When [Binary mode] is 1 (Binary mode)

<DS>n...n : When [Binary mode] is 0 (Normal)

- Parameter

m [Number of data] = Valid Range : 0001 to 0366 bytes
n [Print data] = Data

[Coding Example]

Module width: 02 dots, Minimum module height: 04 dots, Data code word per row: 1, Rows per symbol: 14

<A>
<V>100<H>200**<2D12>,02,04,1,14**
<DN>0010,0123456789
<Q>2
<Z>

[Supplementary Explanation]

- Number of row per symbol is decided by number of data code words per row.

  For details, refer to "Micro PDF417 – symbol size and number of data" below.
- Recommended to specify 2 dots or more for 8 dots/mm and 12 dots/mm printhead and 4 dots or more for 24 dots/mm printhead because the minimum module width and minimum module height of QR code may not be read by the scanner.
- Barcode generation module has been modified for improvement. How the generated image looks may differ due to the change, however the read result is the same.

Note: Symbol size of Micro PDF417 has 34 types and shown in the table below.

Micro PDF417 – symbol size and number of data

Symbol size		Maximum number of data		
Cols (c)	**Rows (d)**	**Alphabet (A-Z)**	**Numeric only**	**Binary mode**
1	11	6	8	3
	14	12	17	7
	17	18	26	10
	20	22	32	13
	24	30	44	18
	28	38	55	22
2	8	14	20	8
	11	24	35	14
	14	36	52	21
	17	46	67	27
	20	56	82	33
	23	64	93	38
	26	72	105	43
3	6	10	14	6
	8	18	26	10
	10	26	38	15
	12	34	49	20
	15	46	67	27
	20	66	96	39
	26	90	132	54
	32	114	167	68
	38	138	202	82
	44	162	237	97
4	4	14	20	8
	6	22	32	13
	8	34	49	20
	10	46	67	27
	12	58	85	34
	15	76	111	45

Symbol size		Maximum number of data		
Cols (c)	Rows (d)	Alphabet (A-Z)	Numeric only	Binary mode
	20	106	155	63
	26	142	208	85
	32	178	261	106
	38	214	313	128
	44	250	366	150

Way of mixing alphabets (Capital, lower case), numeric characters and control codes differs by combination of number of characters.

Micro PDF417 Code table

					S				I				S				O			
				B8	0	0	0	0	0	0	0	0	1	1	1	1	1	1	1	1
				B7	0	0	0	0	1	1	1	1	0	0	0	0	1	1	1	1
				B6	0	0	1	1	0	0	1	1	0	0	1	1	0	0	1	1
				B5	0	1	0	1	0	1	0	1	0	1	0	1	0	1	0	1
B4	B3	B2	B1		0	1	2	3	4	5	6	7	8	9	A	B	C	D	E	F
0	0	0	0	0			SP	0	@	P	`	p								
0	0	0	1	1			!	1	A	Q	a	q								
0	0	1	0	2			″	2	B	R	b	r								
0	0	1	1	3			#	3	C	S	c	s								
0	1	0	0	4			$	4	D	T	d	t								
0	1	0	1	5			%	5	E	U	e	u								
0	1	1	0	6			&	6	F	V	f	v								
0	1	1	1	7			’	7	G	W	g	w								
1	0	0	0	8			(	8	H	X	h	x								
1	0	0	1	9			)	9	I	Y	i	y								
1	0	1	0	A			*	:	J	Z	j	z								
1	0	1	1	B			+	;	K	[	k	{								
1	1	0	0	C			,	<	L	¥	l	|								
1	1	0	1	D			−	=	M	]	m	}								
1	1	1	0	E			.	>	N	^	n	~								
1	1	1	1	F			/	?	O	_	o	DEL								

Micro PDF417 can specify 00H to FFH to print data when binary mode is specified.

[ESC+2D20] MaxiCode

Hexadecimal code	ESC	2D20	Parameter
	$<1B>_{16}$	$<32>_{16}<44>_{16}$ $<32>_{16}$ $<30>_{16}$	,a(,bbb,ccc,d...d)
Initial value	None		

Valid range and term of command	When the power is OFF	The set parameter is not maintained.
	Valid range within items	The set parameter becomes invalid.
	Valid range between items	The set parameter becomes invalid.

[Function]

Specifying MaxiCode.

[Format] (Setup part)

<2D20>,a(,bbb,ccc,d...d)

- Parameter

a [Mode]
2 : Transportation (Numeric)
3 : Transportation (Alphanumeric)
4 : Standard symbol
6 : Reader programing
* Following parameter must be specified when specifying mode 2 or mode 3.
When specifying mode 4 or mode 6, the parameter should be omitted.

b [Service class] = Valid Range : 001 to 999 (Numeric)
c [Country code] = Valid Range : 001 to 999 (Numeric)
d [Postal code] = Valid Range : 0 to 999999999 (Mode 2)
000000 to 999999 (Mode 3)
* Mode 2: Max 9 digits (Numeric only)
Mode 3: Fixed 6 digits (Capital alphabet)

[Format] (Data part)

<DN>mmmm,n...n

- Parameter

m [Number of Data] = Valid Range : 1 to 138
n [Print data] = Data
* 00H cannot be specified.

Mode	Service class	Country code	Postal code	Maximum print data	
				Numeric only	Alphanumeric
2	Fixed 3 digits (Numeric only)	Fixed 3 digits (Numeric only)	Max. 9 digits	123	84
3			Fixed 6 digits (Alphanumeric)		
4	Omission			138	93
6					

[Coding Example]

Mode: Transportation (Numeric only), Service class: 003, Country code: 081, Postal code: 123456789

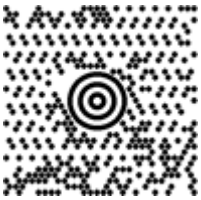

<A>
<V>100<H>200**<2D20>,2,003,081,123456789**
<DN>0010,0123456789
<Q>2
<Z>

[Supplementary Explanation]

- Size of MaxiCode are not changed by number of data for printing.
- If the parameter other than the description is specified or number of print data does not match, printing is not performed.
- When specifying mode 4 and mode 6, number of print data must be specified over 12. When number of print data is specified less than 11, scanner cannot read printed MaxiCode.
- The maximum number of print data varies depending on the print data combination when using the print data other than alphanumeric code.
- Barcode generation module has been modified for improvement. How the generated image looks may differ due to the change, however the read result is the same.

MaxiCode Code table

					S				I				S				0			
				B8	0	0	0	0	0	0	0	0	1	1	1	1	1	1	1	1
				B7	0	0	0	0	1	1	1	1	0	0	0	0	1	1	1	1
				B6	0	0	1	1	0	0	1	1	0	0	1	1	0	0	1	1
				B5	0	1	0	1	0	1	0	1	0	1	0	1	0	1	0	1
B4	B3	B2	B1		0	1	2	3	4	5	6	7	8	9	A	B	C	D	E	F
0	0	0	0	0			SP	0	@	P	`	p								
0	0	0	1	1			!	1	A	Q	a	q								
0	0	1	0	2			″	2	B	R	b	r								
0	0	1	1	3			#	3	C	S	c	s								
0	1	0	0	4			$	4	D	T	d	t								
0	1	0	1	5			%	5	E	U	e	u								
0	1	1	0	6			&	6	F	V	f	v								
0	1	1	1	7			’	7	G	W	g	w								
1	0	0	0	8			(	8	H	X	h	x								
1	0	0	1	9			)	9	I	Y	i	y								
1	0	1	0	A			*	:	J	Z	j	z								
1	0	1	1	B			+	;	K	[	k	{								
1	1	0	0	C			,	<	L	¥	l	|								
1	1	0	1	D			−	=	M	]	m	}								
1	1	1	0	E			.	>	N	^	n	~								
1	1	1	1	F			/	?	O	_	o	DEL								

MaxiCode can specify from 01H to FFH.

[ESC+2D30] QR Code (Model 2)

Hexadecimal code	ESC	2D30	Parameter
	<1B>$_{16}$	<32>$_{16}$<44>$_{16}$ <33>$_{16}$ <30>$_{16}$	,a,bb,c,d(,ee,ff,gg)
Initial value	None		

Valid range and term of command	When the power is OFF	The set parameter is not maintained.
	Valid range within items	The set parameter becomes invalid.
	Valid range between items	The set parameter becomes invalid.

[Function]

Specifying QR Code (Model 2).

[Format] (Setup part)

<2D30>,a,bb,c,d(,ee,ff,gg)

- Parameter

a [Error Correction Level]
L : 7%
M : 15%
Q : 25%
H : 30%

b [Size of one side of cell] = Valid Range : 01 to 99 dots
* Specify more than 02 dots, otherwise scanner may have reading problem. 04 dots or more is recommended for stable operation.

c [Data setup mode]
0 : Manual setup
1 : Automatic setup
* Note that data is specified differently depending on this setting.

d [Concatenation mode]
0 : Normal mode
1 : Concatenation mode

Following parameter must be specified when specifying 1 (Concatenation mode) in Concatenation mode. Omit following parameter in normal mode.

e [Number of partitions of concatenation mode] = Valid Range : 01 to 16
* Number of partitions: Specifying how many QR code are to be concatenated divided by Concatenation mode.

f [Sequential number partitioned by concatenation mode] = Valid Range : 01 to 16
* Sequential number: Specifying what number is it of divided QR code.

g [Concatenation mode parity data] = Valid Range : 00 to FF
* Parity data: Specifying exclusive OR of all the print data in divided QR code with HEX characters.

[Format] (Data part)

Manual setup (Data setup mode)

<DS>k,n...n : Use when input mode specification is Numeric mode, Alphanumeric mode and Kanji mode.

<DN>mmmm,n...n : Use when specifying by binary.

Automatic setup (Data setup mode)

<DN>mmmm,n...n : Change input mode automatically according to input data.

- Parameter

k [Input mode]
1 : Numeric mode
2 : Alphanumeric mode
3 : Kanji mode (Shift JIS Kanji code)
* Specify only when specifying Manual setup in Data setting mode.
* There is binary specification other than above, but data specification command is different.

m [Number of data] = Valid Range : 1 to 2953
* Specify when specifying Automatic setup in Data setting mode or specifying binary specification in Manual setup.

n [Print data] = Data

[Format] (version)

<QV>pp : Use when specifying the version.

- Parameter

pp [Version] = 00 to 40 (MODEL2)
* This setting is used when fixing the size of QR symbol with the version command. When not specified, it becomes Auto. Specifying 00 also becomes Auto. It does not become a parameter error from 00 to 40.
* Refer to “[ESC+QV] QR code version” for details.

[Supplementary Explanation1]

- When specifying Kanji in <DN>, specify size that is 2 x number of Kanji characters.
- For <DN> in Automatic setup, when 80H to 9FH and E0H to FFH is specified as data, it is handed as Kanji mode, and cannot specify them as binary.

[Coding Example 1]

Error correction level: 7%, Size of one side of cell: 05, Data setup mode: Manual setup, Concatenation mode: Normal

<A>
<V>100<H>200**<2D30>,L,05,0,0**
<DS>1,012345
<Q>2
<Z>

[Supplementary Explanation2]

- If the parameter other than the description is specified or number of print data does not match, printing is not performed.

- Data specification command in data part varies according to parameter setup or specified data.

[Coding Example 2]

Error correction level: 7%, Size of one side of cell: 04, Mixed specification of Manual setup (Data setup mode)

In Manual setup, you can proceed specifying data in specified input mode (Numeric, Alphanumeric, Kanji, Binary).

<A>
<V>100<H>200
<2D30>,L,04,0,0
<DS>3,サトー
<DN>0010,0123456789
<DS>1,123
<Q>1
<Z>

[Supplementary Explanation3]

- Parameter part to be followed by Data part. Data part and data part should be specified in a row. When do not specify in a row, print result may not be secured.
- Total number of data (n) need to be less than 7000 bytes. Maximum number of blocks in data part specified in a row is 200.

[Coding Example 3]

Error correction level: 7%, Size of one side of cell: 05, Data setup mode: Manual setup, Concatenation mode: Normal, Version 5

<A>
<V>100<H>200<2D30>,L,05,0,0
<QV>5
<DS>1,012345
<DN>0004,6789
<Q>1
<Z>

[Supplementary Explanation4]

- Specify <QV> command between <2Dxx> and <DN>/<DS>.
- When resulted in a parameter error, it will be handled in the same manner of no specification.
- It does not become a parameter error from 00 to 40 (Set the value within the range corresponding to each model).

  Setting range(MODEL2): 00 to 40
- Sending the data exceeding the data size of specified version will result in error and QR code is not printed.

QR Code data size list (Model 2)

Version	Error Correction	Numeric	Alpha-Numeric	Kanji	Binary
1	L	41	25	10	17
	M	34	20	8	14
21 × 21	Q	27	16	7	11
	H	17	10	4	7
2	L	77	47	20	32
	M	63	38	16	26
25 × 25	Q	48	29	12	20
	H	34	20	8	14
3	L	127	77	32	53
	M	101	61	26	42
29 × 29	Q	77	47	20	32
	H	58	35	15	24
4	L	187	114	48	78
	M	149	90	38	62
33 × 33	Q	111	67	28	46
	H	82	50	21	34
5	L	255	154	65	106
	M	202	122	52	84
37 × 37	Q	144	87	37	60
	H	106	64	27	44
6	L	322	195	82	134
	M	255	154	65	106
41 × 41	Q	178	108	45	74
	H	139	84	36	58
7	L	370	224	95	154
	M	293	178	75	122
45 × 45	Q	207	125	53	86
	H	154	93	39	64
8	L	461	279	118	192
	M	365	221	93	152
49 × 49	Q	259	157	66	108
	H	202	122	52	84
9	L	552	335	141	230
	M	432	262	111	180
53 × 53	Q	312	189	80	130
	H	235	143	60	98
10	L	652	395	167	271
	M	513	311	131	213
57 × 57	Q	364	221	93	151
	H	288	174	74	119

Version	Error Correction	Numeric	Alpha-Numeric	Kanji	Binary
11	L	772	468	198	321
	M	604	366	155	251
61 × 61	Q	427	259	109	177
	H	331	200	85	137
12	L	883	535	226	367
	M	691	419	177	287
65 × 65	Q	489	296	125	203
	H	374	227	96	155
13	L	1022	619	262	425
	M	796	483	204	331
69 × 69	Q	580	352	149	241
	H	427	259	109	177
14	L	1101	667	282	458
	M	871	528	223	362
73 × 73	Q	621	376	159	258
	H	468	283	120	194
15	L	1250	758	320	520
	M	991	600	254	412
77 × 77	Q	703	426	180	292
	H	530	321	136	220
16	L	1408	854	361	586
	M	1082	656	277	450
81 × 81	Q	775	470	198	322
	H	602	365	154	250
17	L	1548	938	397	644
	M	1212	734	310	504
85 × 85	Q	876	531	224	364
	H	674	408	173	280
18	L	1725	1046	442	718
	M	1346	816	345	560
89 × 89	Q	948	574	243	394
	H	746	452	191	310
19	L	1903	1153	488	792
	M	1500	909	384	624
93 × 93	Q	1063	644	272	442
	H	813	493	208	338
20	L	2061	1249	528	858
	M	1600	970	410	666
97 × 97	Q	1159	702	297	482
	H	919	557	235	382

Version	Error Correction	Numeric	Alpha-Numeric	Kanji	Binary
21	L	2232	1352	572	929
	M	1708	1035	438	711
101 × 101	Q	1224	742	314	509
	H	969	587	248	403
22	L	2409	1460	618	1003
	M	1872	1134	480	779
105 × 105	Q	1358	823	348	565
	H	1056	640	270	439
23	L	2620	1588	672	1091
	M	2059	1248	528	857
109 × 109	Q	1468	890	376	611
	H	1108	672	284	461
24	L	2812	1704	721	1171
	M	2188	1326	561	911
113 × 113	Q	1588	963	407	661
	H	1228	744	315	511
25	L	3057	1853	784	1273
	M	2395	1451	614	997
117 × 117	Q	1718	1041	440	715
	H	1286	779	330	535
26	L	3283	1990	842	1367
	M	2544	1542	652	1059
121 × 121	Q	1804	1094	462	751
	H	1425	864	365	593
27	L	3517	2132	902	1465
	M	2701	1637	692	1125
125 × 125	Q	1933	1172	496	805
	H	1501	910	385	625
28	L	3669	2223	940	1528
	M	2857	1732	732	1190
129 × 129	Q	2085	1263	534	868
	H	1581	958	405	658
29	L	3909	2369	1002	1628
	M	3035	1839	778	1264
133 × 133	Q	2181	1322	559	908
	H	1677	1016	430	698
30	L	4158	2520	1066	1732
	M	3289	1994	843	1370
137 × 137	Q	2358	1429	604	982
	H	1782	1080	457	742

Version	Error Correction	Numeric	Alpha-Numeric	Kanji	Binary
31	L	4417	2677	1132	1840
	M	3486	2113	894	1452
141 × 141	Q	2473	1499	634	1030
	H	1897	1150	486	790
32	L	4686	2840	1201	1952
	M	3693	2238	947	1538
145 × 145	Q	2670	1618	684	1112
	H	2022	1226	518	842
33	L	4965	3009	1273	2068
	M	3909	2369	1002	1628
149 × 149	Q	2805	1700	719	1168
	H	2157	1307	553	898
34	L	5253	3183	1347	2188
	M	4134	2506	1060	1722
153 × 153	Q	2949	1787	756	1228
	H	2301	1394	590	958
35	L	5529	3351	1417	2303
	M	4343	2632	1113	1809
157 × 157	Q	3081	1867	790	1283
	H	2361	1431	605	983
36	L	5836	3537	1496	2431
	M	4588	2780	1176	1911
161 × 161	Q	3244	1966	832	1351
	H	2524	1530	647	1051
37	L	6153	3729	1577	2563
	M	4775	2894	1224	1989
165 × 165	Q	3417	2071	876	1423
	H	2625	1591	673	1093
38	L	6479	3927	1661	2699
	M	5039	3054	1292	2099
169 × 169	Q	3599	2181	923	1499
	H	2735	1658	701	1139
39	L	6743	4087	1729	2809
	M	5313	3220	1362	2213
173 × 173	Q	3791	2298	972	1579
	H	2927	1774	750	1219
40	L	7089	4296	1817	2953
	M	5596	3391	1435	2331
177 × 177	Q	3993	2420	1024	1663
	H	3057	1852	784	1273

[ESC+2D31] QR Code (Model 1)

Hexadecimal code	ESC	2D31	Parameter
	$<1B>_{16}$	$<32>_{16}<44>_{16}$ $<33>_{16}$ $<31>_{16}$	,a,bb,c,d(,ee,ff,gg)
Initial value	None		

Valid range and term of command	When the power is OFF	The set parameter is not maintained.
	Valid range within items	The set parameter becomes invalid.
	Valid range between items	The set parameter becomes invalid.

[Function]

Specifying QR Code (Model 1).

[Format] (Setup part)

<2D31>,a,bb,c,d(,ee,ff,gg)

- Parameter

a [Error Correction Level]
L : 7%
M : 15%
Q : 25%
H : 30%

b [Size of one side of cell] = Valid Range : 01 to 99 dots
* Specify more than 02 dots, otherwise scanner may have reading problem.
04 dots or more is recommended for stable operation.

c [Data setup mode]
0 : Manual setup
1 : Automatic setup
* Note that data is specified differently depending on this setting.

d [Concatenation mode]
0 : Normal mode
1 : Concatenation mode

Following parameter must be specified when specifying 1 (Concatenation mode) in Concatenation mode. Omit following parameter in normal mode.

e [Number of partitions of concatenation mode] = Valid Range : 01 to 16
* Number of partitions: Specifying how many QR code are to be concatenated divided by Concatenation mode.

f [Sequential number partitioned by concatenation mode] = Valid Range : 01 to 16
* Sequential number: Specifying what number is it of divided QR code.

g [Concatenation mode parity data] = Valid Range : 00 to FF
* Parity data: Specifying exclusive OR of all the print data in divided QR code with HEX characters.

[Format] (Data part)

Manual setup (Data setup mode)

<DS>k,n...n : Use when input mode specification is Numeric mode, Alphanumeric mode and Kanji mode.

<DN>mmmm,n...n : Use when specifying by binary.

Automatic setup (Data setup mode)

<DN>mmmm,n...n : Change input mode automatically according to input data.

- Parameter

k [Input mode]
1 : Numeric mode
2 : Alphanumeric mode
3 : Kanji mode (Shift JIS Kanji code)
* Specify only when specifying Manual setup in Data setting mode.
* There is binary specification other than above, but data specification command is different.

m [Number of data] = Valid Range : 1 to 486
* Specify when specifying Automatic setup in Data setting mode or specifying binary specification in Manual setup.

n [Print data] = Data

[Format] (version)

<QV>pp : Specify when specifying the version.

- Parameter

pp [Version] = 00 to 14 (MODEL1)
* This setting is used when fixing the size of QR symbol with the version command. When not specified, it becomes Auto. Specifying 00 also becomes Auto. It does not become a parameter error from 00 to 40.
* Refer to “[ESC+QV] QR code version” for details.

[Supplementary Explanation1]

- When specifying Kanji in <DN>, specify size that is 2 x number of Kanji characters.
- For <DN> in Automatic setup, when 80H to 9FH and E0H to FFH is specified as data, it is handed as Kanji mode, and cannot specify them as binary.

[Coding Example 1]

Error correction level: 7%, Size of one side of cell: 05, Data setup mode: Manual setup, Concatenation mode: Normal

<A>
<V>100<H>200**<2D31>,L,05,0,0**
<DS>1,012345
<Q>2
<Z>

[Supplementary Explanation2]

- If the parameter other than the description is specified or number of print data does not match, printing is not performed.
- Data specification command in data part varies according to parameter setup or specified data.

[Coding Example 2]

Error correction level: 7%, Size of one side of cell: 04, Mixed specification of Manual setup (Data setup mode)

In Manual setup, you can proceed specifying data in specified input mode (Numeric, Alphanumeric, Kanji, Binary).

<A>
<V>100<H>200
<2D31>,L,04,0,0
<DS>3,サトー
<DN>0010,0123456789
<DS>1,123
<Q>1
<Z>

[Supplementary Explanation3]

- Parameter part to be followed by Data part. Data part and data part should be specified in a row. When do not specify in a row, print result may not be secured.

[Coding Example 3]

Error correction level: 7%, Size of one side of cell: 05, Data setup mode: Manual setup, Concatenation mode: Normal, Version 5

<A>
<V>100<H>200**<2D31>,L,05,0,0**
<QV>5
<DS>1,012345
<DN>0004,6789
<Q>1
<Z>

[Supplementary Explanation4]

- Specify <QV> command between <2Dxx> and <DN>/<DS>.
- When resulted in a parameter error, it will be handled in the same manner of no specification.
- It does not become a parameter error from 00 to 40 (Set the value within the range corresponding to each model).

  Setting range(MODEL1): 00 to 14
- Sending the data exceeding the data size of specified version will result in error and QR code is not printed.

QR Code data size list (Model 1)

Version	Error Correction	Numeric	Alpha-numeric	Kanji	Binary
1	L	40	24	10	17
	M	33	20	8	14
21×21	Q	25	15	6	11
	H	16	10	4	7
2	L	81	49	20	34
	M	66	40	17	28
25×25	Q	52	31	13	22
	H	33	20	8	14
3	L	131	79	33	55
	M	100	60	25	42
29×29	Q	81	49	20	34
	H	52	31	13	22
4	L	186	113	48	78
	M	138	84	35	58
33×33	Q	114	69	29	48
	H	76	46	19	32
5	L	253	154	65	106
	M	191	116	49	80
37×37	Q	157	95	40	66
	H	105	63	27	44
6	L	321	194	82	134
	M	249	151	64	104
41×41	Q	201	122	51	84
	H	133	81	34	56
7	L	402	244	103	168
	M	311	188	80	130
45×45	Q	253	154	65	106
	H	167	101	43	70
8	L	493	299	126	206
	M	378	229	97	158
49×49	Q	301	183	77	126
	H	203	123	52	85
9	L	585	354	150	244
	M	441	267	113	184
53×53	Q	369	223	94	154
	H	239	145	61	100

Version	Error Correction	Numeric	Alpha-numeric	Kanji	Binary
10	L	690	418	177	287
	M	526	319	135	219
57×57	Q	433	262	111	180
	H	291	176	74	121
11	L	800	485	205	333
	M	608	368	156	253
61×61	Q	493	299	126	205
	H	342	207	87	142
12	L	915	555	234	381
	M	694	421	178	289
65×65	Q	579	351	148	241
	H	390	236	100	162
13	L	1030	624	264	429
	M	790	479	202	329
69×69	Q	656	398	168	273
	H	454	275	116	189
14	L	1167	707	299	486
	M	877	531	225	365
73×73	Q	738	447	189	307
	H	498	302	127	207

[ESC+2D32] Micro QR Code

Hexadecimal code	ESC	2D32	Parameter
	$<1B>_{16}$	$<32>_{16}<44>_{16}$ $<33>_{16}$ $<32>_{16}$	,a,bb,c
Initial value	None		

Valid range and term of command	When the power is OFF	The set parameter is not maintained.
	Valid range within items	The set parameter becomes invalid.
	Valid range between items	The set parameter becomes invalid.

[Function]

Specifying QR Code (Micro QR Code).

[Format] (Setup part)

<2D32>,a,bb,c

- Parameter

a [Error Correction Level]
L : 7%
M : 15%
Q : 25%
b [Size of one side of cell] = Valid Range : 01 to 99 dots
* Specify more than 02 dots, otherwise scanner may have reading problem.
04 dots or more is recommended for stable operation.

c [Data setup mode]
0 : Manual setup
1 : Automatic setup

[Format] (Data part)

Manual setup (Data setup mode)

<DS>k,n...n : Use when input mode specification is Numeric mode, Alphanumeric mode and Kanji mode.

<DN>mmmm,n...n : Use when specifying by binary.

Automatic setup (Data setup mode)

<DN>mmmm,n...n : Change input mode automatically according to input data.

- Parameter

k [Input mode]
1 : Numeric mode
2 : Alphanumeric mode
3 : Kanji mode (Shift JIS Kanji)
* There is binary specification other than above, but data specification command is different.

m [Number of data] = Valid Range : 1 to 15
* Specify when specifying Automatic setup in Data setting mode.

n [Print data] = Data

[Format] (version)

<QV>pp : Specify when specifying the version.

- Parameter

pp [Version] = 00 to 04 (MicroQR M1 to M4)
* This setting is used when fixing the size of QR symbol with the version command. When not specified, it becomes Auto. Specifying 00 also becomes Auto. It does not become a parameter error from 00 to 40.
* Refer to “[ESC+QV] QR code version” for details.

[Supplementary Explanation1]

- When specifying Kanji in <DN>, specify size that is 2 x number of Kanji characters.
- For <DN> in Automatic setup, when 80H to 9FH and E0H to FFH is specified as data, it is handed as Kanji mode, and cannot specify them as binary.

[Coding Example 1]

Error correction level: 7%, Size of one side of cell: 04

<A>
<V>100<H>200**<2D32>,L,04,0**
<DS>1,012345
<Q>2
<Z>

[Supplementary Explanation2]

- If the parameter other than the description is specified or number of print data does not match, printing is not performed.
- Data specification command in data part varies according to parameter setup or specified data.

[Coding Example 2]

Error correction level: 7%, Size of one side of cell: 04, Mixed specification of Manual setup (Data setup mode)

In Manual setup, you can proceed specifying data in specified input mode (Numeric, Alphanumeric, Kanji, Binary).

<A>
<V>100<H>200
<2D32>,L,04,0
<DS>3,サトー
<DN>0010,0123456789
<DS>1,123
<Q>1
<Z>

[Supplementary Explanation3]

- Parameter part to be followed by Data part. Data part and data part should be specified in a row. When do not specify in a row, print result may not be secured.

  Micro QR Code Data size list

Version	Error correction	Numeric	Alphanumeric	Kanji	Binary
M1 (11x11)	L (Error detection only)	5	-	-	-
M2 (13x13)	L M	10 8	6 5	- -	- -
M3 (15x15)	L M	23 18	14 11	6 4	9 7
M4 (17x17)	L M Q	35 30 21	21 18 13	9 8 5	15 13 9

[Coding Example 3]

Error correction level: 7%, Size of one side of cell: 05, Data setup mode: Manual setup, Concatenation mode: Normal, printed in version M4

<A>
<V>100<H>200**<2D32>,L,05,0,0**
<QV>4
<DS>1,012345
<DN>0004,6789
<Q>1
<Z>

[Supplementary Explanation4]

- Specify <QV> command between <2Dxx> and <DN>/<DS>.
- When resulted in a parameter error, it will be handled in the same manner of no specification.
- It does not become a parameter error from 00 to 40 (Set the value within the range corresponding to each model).

  For MicroQR, the setting range is from 00 to 04.
- Sending the data exceeding the data size of specified version will result in error and QR code is not printed.

[ESC+2D34] GS1 QR Code (Model 2)

Hexadecimal code	ESC	2D34	Parameter
	$<1B>_{16}$	$<32>_{16}<44>_{16}$ $<33>_{16}$ $<34>_{16}$	,a,bb
Initial value	None		

Valid range and term of command	When the power is OFF	The set parameter is not maintained.
	Valid range within items	The set parameter becomes invalid.
	Valid range between items	The set parameter becomes invalid.

[Function]

Specifying GS1 QR Code (Model 2).

[Format] (Setup part)

<2D34>,a,bb

- Parameter

a [Error Correction Level]
L : 7%
M : 15%
Q : 25%
H : 30%
b [Size of one side of cell] = Valid Range : 01 to 99 dots
* Specify more than 02 dots when head density is 12dot/mm, otherwise scanner may have reading problem.

[Format] (Data part)

Automatic setup (Data setup mode)

<DN>mmmm,n...n : Change input mode automatically according to input data.

- Parameter

m [Number of data] = Valid Range : 1 to 7087
n [Print data] = Data
* Use when fix the size of QR symbol by specifying the version. When not specified, it will be specified automatically.

[Format] (version)

<QV>pp : Use when specifying the version.

- Parameter

pp [Version] = 00 to 40 (GS1 QR)
* This setting is used when fixing the size of QR symbol with the version command. When not specified, it becomes Auto. Specifying 00 also becomes Auto. It becomes a parameter error when a value is specified other than from 00 to 40.
* See “[ESC+QV] QR code version” for details.

[Supplementary Explanation1]

- AI identifier's fixed length and variable length are not be checked. AI identifier is not checked too. When specifying AI identifier which supported the variable data character string, please include FNC1(@1) at the end of data.

- If you want to include @ character in the data string data, please enter @@.
- Do not specify @ data other than FNC1(@1), @(@@) in the data string data.

  If only one @ character is specified, the @ character will be deleted.
  Sample : If you specify 12345@6789 (all 10 characters), it will encode with 123456789 (9 characters).
- If only @1 is specified in the data string, a command error will occur.
- If "%" is included in the print data, there is a possibility that "%" can not be correctly scanned depending on the type of input data or the scanner. If "%" is not scanned correctly, please specify "%%". For details, please contact each scanner maker.
- Checking of valid data specified in GS1 QR code is not implemented.
- GS1 QR code does not support the manual setting mode.
- GS1 QR code does not support the concatenation mode.

[Coding example 1]

Error correction level: 7%, Size of one side of cell: 5, Concentration mode: Normal, Version5 Data : (01)04912345123459(10)ABC123<FNC1>(96)11022888

<A>
<V>100<H>200**<2D34>,L,05**
<QV>5
<DN>0036,010491234512345910ABC123@19611022888
<Q>1
<Z>

[Coding example 2]

Error correction level: 7%, Size of one side of cell: 5, Concentration mode: Normal, Version5 Data : (01)04993191000019(8200)www.sato.co.jp

<A>
<V>100<H>200**<2D34>,L,05**
<QV>5
<DN>0034,01049931910000198200www.sato.co.jp
<Q>1
<Z>

[Supplementary Explanation2]

- Specify QR Code Version <QV> command between <2Dxx> and <DN>.
- When resulted in a parameter error, it will be handled in the same manner of no specification.
- It become a parameter error when a value is specified other than from 00 to 40.

  Setting range (GS1 QR code): 00 to 40 (Set the value within the range corresponding to each model).
- Sending the data exceeding the data size of specified version will result in error and GS1 QR code is not printed.

List of QR code data size (for GS1 QR)

Version	Error Correction	Number	Alphanumeric	Chinese characters	Binary	Version	Error Correction	Number	Alphanumeric	Chinese characters	Binary
1	L	40	24	10	17	11	L	771	467	198	321
	M	33	20	8	14		M	603	366	154	251
21×21	Q	25	15	6	11	61×61	Q	426	258	109	177
	H	16	10	4	7		H	330	200	84	137
2	L	76	46	19	32	12	L	882	534	226	367
	M	61	37	16	26		M	690	418	177	287
25×25	Q	47	28	12	20	65×65	Q	488	296	125	203
	H	33	20	8	14		H	373	226	95	155
3	L	126	76	32	53	13	L	1021	619	262	425
	M	100	60	25	42		M	795	482	204	331
29×29	Q	76	46	19	32	69×69	Q	579	351	148	241
	H	57	34	14	24		H	426	258	109	177
4	L	186	113	48	78	14	L	1100	667	282	458
	M	148	90	38	62		M	870	527	223	362
33×33	Q	109	66	28	46	73×73	Q	620	376	159	258
	H	81	49	21	34		H	466	283	119	194
5	L	253	154	65	106	15	L	1249	757	320	520
	M	201	122	51	84		M	990	600	254	412
37×37	Q	144	87	36	60	77×77	Q	702	425	180	292
	H	105	63	27	44		H	529	320	135	220
6	L	321	194	82	134	16	L	1407	853	361	586
	M	253	154	65	106		M	1081	655	277	450
41×41	Q	177	107	45	74	81×81	Q	774	469	198	322
	H	138	84	35	58		H	601	364	154	250
7	L	369	223	94	154	17	L	1546	938	396	644
	M	292	177	75	122		M	1210	734	310	504
45×45	Q	205	124	52	86	85×85	Q	874	530	224	364
	H	153	92	39	64		H	673	408	172	280
8	L	460	279	118	192	18	L	1724	1045	442	718
	M	364	220	93	152		M	1345	815	345	560
49×49	Q	258	156	66	108	89×89	Q	946	574	242	394
	H	201	122	51	84		H	745	451	191	310
9	L	551	334	141	230	19	L	1902	1152	487	792
	M	431	261	110	180		M	1498	908	384	624
53×53	Q	311	188	80	130	93×93	Q	1062	643	272	442
	H	234	142	60	98		H	812	492	208	338
10	L	651	395	167	271	20	L	2060	1248	528	858
	M	512	310	131	213		M	1599	969	410	666
57×57	Q	363	220	93	151	97×97	Q	1158	702	297	482
	H	286	174	73	119		H	918	556	235	382

Version	Error Correction	Number	Alphanumeric	Chinese characters	Binary
21	L	2230	1352	572	929
	M	1707	1035	438	711
101×101	Q	1222	741	314	509
	H	968	587	248	403
22	L	2408	1459	617	1003
	M	1870	1134	479	779
105×105	Q	1357	822	348	565
	H	1054	639	270	439
23	L	2619	1587	671	1091
	M	2058	1247	527	857
109×109	Q	1467	889	376	611
	H	1107	671	284	461
24	L	2811	1704	721	1171
	M	2187	1326	561	911
113×113	Q	1587	962	407	661
	H	1227	744	314	511
25	L	3056	1852	783	1273
	M	2394	1451	614	997
117×117	Q	1717	1040	440	715
	H	1285	779	329	535
26	L	3282	1989	841	1367
	M	2542	1541	652	1059
121×121	Q	1803	1093	462	751
	H	1424	863	365	593
27	L	3516	2131	901	1465
	M	2700	1636	692	1125
125×125	Q	1932	1171	495	805
	H	1500	909	384	625
28	L	3667	2223	940	1528
	M	2856	1731	732	1190
129×129	Q	2083	1263	534	868
	H	1579	957	405	658
29	L	3907	2368	1002	1628
	M	3035	1839	778	1264
133×133	Q	2179	1321	559	908
	H	1675	1015	429	698
30	L	4157	2159	1066	1732
	M	3288	1993	843	1370
137×137	Q	2357	1428	604	982
	H	1781	1079	456	742

Version	Error Correction	Number	Alphanumeric	Chinese characters	Binary
31	L	4416	2676	1132	1840
	M	3485	2112	893	1452
141×141	Q	2472	1498	634	1030
	H	1896	1149	486	790
32	L	4685	2839	1201	1952
	M	3691	2237	946	1528
145×145	Q	2669	1618	684	1112
	H	2021	1225	518	842
33	L	4963	3008	1272	2068
	M	3907	2368	1002	1628
149×149	Q	2803	1699	719	1168
	H	2115	1306	552	898
34	L	5251	3183	1347	2188
	M	4133	2505	1060	1722
153×153	Q	2947	1786	756	1228
	H	2299	1394	589	958
35	L	5527	3350	1417	2303
	M	4342	2631	1113	1809
157×157	Q	3081	1866	789	1283
	H	2359	1430	605	983
36	L	5835	3536	1496	2431
	M	4587	2780	1176	1911
161×161	Q	3243	1965	831	1351
	H	2523	1529	647	1051
37	L	6151	3728	1577	2563
	M	4774	2893	1224	1989
165×165	Q	3415	2070	876	1423
	H	2623	1590	672	1093
38	L	6478	3926	1661	2699
	M	5038	3053	1292	2099
169×169	Q	3598	2180	922	1499
	H	2734	1657	701	1139
39	L	6742	4086	1728	2809
	M	5311	3219	1362	2213
173×173	Q	3790	2297	792	1579
	H	2926	1773	750	1219
40	L	7087	4295	1817	2953
	M	5595	3391	1434	2331
177×177	Q	3991	2419	1023	1663
	H	3055	1852	783	1273

List of QR code data size (for Model 2)

Version	Error Correction	Number	Alphanumeric	Chinese characters	Binary	Version	Error Correction	Number	Alphanumeric	Chinese characters	Binary
1	L	41	25	10	17	11	L	772	468	198	321
	M	34	20	8	14		M	604	366	155	251
21 x 21	Q	27	16	7	11	61 x 61	Q	427	259	109	177
	H	17	10	4	7		H	331	200	85	137
2	L	77	47	20	32	12	L	883	535	226	367
	M	63	38	16	26		M	691	419	177	287
25 x 25	Q	48	29	12	20	65 x 65	Q	489	296	125	203
	H	34	20	8	14		H	374	227	96	155
3	L	127	77	32	53	13	L	1022	619	262	425
	M	101	61	26	42		M	796	483	204	331
29 x 29	Q	77	47	20	32	69 x 69	Q	580	352	149	241
	H	58	35	15	24		H	427	259	109	177
4	L	187	114	48	78	14	L	1101	667	282	458
	M	149	90	38	62		M	871	528	223	362
33 x 33	Q	111	67	28	46	73 x 73	Q	621	376	159	258
	H	82	50	21	34		H	468	283	120	194
5	L	255	154	65	106	15	L	1250	758	320	520
	M	202	122	52	84		M	991	600	254	412
37 x 37	Q	144	87	37	60	77 x 77	Q	703	426	180	292
	H	106	64	27	44		H	530	321	136	220
6	L	322	195	82	134	16	L	1408	854	361	586
	M	255	154	65	106		M	1082	656	277	450
41 x 41	Q	178	108	45	74	81 x 81	Q	775	470	198	322
	H	139	84	36	58		H	602	365	154	250
7	L	370	224	95	154	17	L	1548	938	397	644
	M	293	178	75	122		M	1212	734	310	504
45 x 45	Q	207	125	53	86	85 x 85	Q	876	531	224	364
	H	154	93	39	64		H	674	408	173	280
8	L	461	279	118	192	18	L	1725	1046	442	718
	M	365	221	93	152		M	1346	816	345	560
49 x 49	Q	259	157	66	108	89 x 89	Q	948	574	243	394
	H	202	122	52	84		H	746	452	191	310
9	L	552	335	141	230	19	L	1903	1153	488	792
	M	432	262	111	180		M	1500	909	384	624
53 x 53	Q	312	189	80	130	93 x 93	Q	1063	644	272	442
	H	235	143	60	98		H	813	493	208	338
10	L	652	395	167	271	20	L	2061	1249	528	858
	M	513	311	131	213		M	1600	970	410	666
57 x 57	Q	364	221	93	151	97 x 97	Q	1159	702	297	482
	H	288	174	74	119		H	919	557	235	382

Version	Error Correction	Number	Alphanumeric	Chinese characters	Binary
21	L	2232	1352	572	929
	M	1708	1035	438	711
101 x 101	Q	1224	742	314	509
	H	969	587	248	403
22	L	2409	1460	618	1003
	M	1872	1134	480	779
105 x 105	Q	1358	823	348	565
	H	1056	640	270	439
23	L	2620	1588	672	1091
	M	2059	1248	528	857
109 x 109	Q	1468	890	376	611
	H	1108	672	284	461
24	L	2812	1704	721	1171
	M	2188	1326	561	911
113 x 113	Q	1588	963	407	661
	H	1228	744	315	511
25	L	3057	1853	784	1273
	M	2395	1451	614	997
117 x 117	Q	1718	1041	440	715
	H	1286	779	330	535
26	L	3283	1990	842	1367
	M	2544	1542	652	1059
121 x 121	Q	1804	1094	462	751
	H	1425	864	365	593
27	L	3517	2132	902	1465
	M	2701	1637	692	1125
125 x 125	Q	1933	1172	496	805
	H	1501	910	385	625
28	L	3669	2223	940	1528
	M	2857	1732	732	1190
129 x 129	Q	2085	1263	534	868
	H	1581	958	405	658
29	L	3909	2369	1002	1628
	M	3035	1839	778	1264
133 x 133	Q	2181	1322	559	908
	H	1677	1016	430	698
30	L	4158	2520	1066	1732
	M	3289	1994	843	1370
137 x 137	Q	2358	1429	604	982
	H	1782	1080	457	742

Version	Error Correction	Number	Alphanumeric	Chinese characters	Binary
31	L	4417	2677	1132	1840
	M	3486	2113	894	1452
141 x 141	Q	2473	1499	634	1030
	H	1897	1150	486	790
32	L	4686	2840	1201	1952
	M	3693	2238	947	1538
145 x 145	Q	2670	1618	684	1112
	H	2022	1226	518	842
33	L	4965	3009	1273	2068
	M	3909	2369	1002	1628
149 x 149	Q	2805	1700	719	1168
	H	2157	1307	553	898
34	L	5253	3183	1347	2188
	M	4134	2506	1060	1722
153 x 153	Q	2949	1787	756	1228
	H	2301	1394	590	958
35	L	5529	3351	1417	2303
	M	4343	2632	1113	1809
157 x 157	Q	3081	1867	790	1283
	H	2361	1431	605	983
36	L	5836	3537	1496	2431
	M	4588	2780	1176	1911
161 x 161	Q	3244	1966	832	1351
	H	2524	1530	647	1051
37	L	6153	3729	1577	2563
	M	4775	2894	1224	1989
165 x 165	Q	3417	2071	876	1423
	H	2625	1591	673	1093
38	L	6479	3927	1661	2699
	M	5039	3054	1292	2099
169 x 169	Q	3599	2181	923	1499
	H	2735	1658	701	1139
39	L	6743	4087	1729	2809
	M	5313	3220	1362	2213
173 x 173	Q	3791	2298	972	1579
	H	2927	1774	750	1219
40	L	7089	4296	1817	2953
	M	5596	3391	1435	2331
177 x 177	Q	3993	2420	1024	1663
	H	3057	1852	784	1273

QR Code (Numeric mode) Code table

					S				I				S				O			
				B8	0	0	0	0	0	0	0	0	1	1	1	1	1	1	1	1
				B7	0	0	0	0	1	1	1	1	0	0	0	0	1	1	1	1
				B6	0	0	1	1	0	0	1	1	0	0	1	1	0	0	1	1
				B5	0	1	0	1	0	1	0	1	0	1	0	1	0	1	0	1
B4	B3	B2	B1		0	1	2	3	4	5	6	7	8	9	A	B	C	D	E	F
0	0	0	0	0				0												
0	0	0	1	1				1												
0	0	1	0	2				2												
0	0	1	1	3				3												
0	1	0	0	4				4												
0	1	0	1	5				5												
0	1	1	0	6				6												
0	1	1	1	7				7												
1	0	0	0	8				8												
1	0	0	1	9				9												
1	0	1	0	A																
1	0	1	1	B																
1	1	0	0	C																
1	1	0	1	D																
1	1	1	0	E																
1	1	1	1	F																

QR Code (Alphanumeric mode) Code table

					S				I				S				O			
				B8	0	0	0	0	0	0	0	0	1	1	1	1	1	1	1	1
				B7	0	0	0	0	1	1	1	1	0	0	0	0	1	1	1	1
				B6	0	0	1	1	0	0	1	1	0	0	1	1	0	0	1	1
				B5	0	1	0	1	0	1	0	1	0	1	0	1	0	1	0	1
B4	B3	B2	B1		0	1	2	3	4	5	6	7	8	9	A	B	C	D	E	F
0	0	0	0	0			SP	0		P										
0	0	0	1	1				1	A	Q										
0	0	1	0	2				2	B	R										
0	0	1	1	3				3	C	S										
0	1	0	0	4			$	4	D	T										
0	1	0	1	5			%	5	E	U										
0	1	1	0	6				6	F	V										
0	1	1	1	7				7	G	W										
1	0	0	0	8				8	H	X										
1	0	0	1	9				9	I	Y										
1	0	1	0	A			*	:	J	Z										
1	0	1	1	B			+		K											
1	1	0	0	C					L											
1	1	0	1	D			-		M											
1	1	1	0	E			.		N											
1	1	1	1	F			/		O											

QR Code (Binary mode) Code table

					S				I				S				O			
				B8	0	0	0	0	0	0	0	0	1	1	1	1	1	1	1	1
				B7	0	0	0	0	1	1	1	1	0	0	0	0	1	1	1	1
				B6	0	0	1	1	0	0	1	1	0	0	1	1	0	0	1	1
				B5	0	1	0	1	0	1	0	1	0	1	0	1	0	1	0	1
B4	B3	B2	B1		0	1	2	3	4	5	6	7	8	9	A	B	C	D	E	F
0	0	0	0	0			SP	0	@	P	`	p								
0	0	0	1	1			!	1	A	Q	a	q								
0	0	1	0	2			″	2	B	R	b	r								
0	0	1	1	3			#	3	C	S	c	s								
0	1	0	0	4			$	4	D	T	d	t								
0	1	0	1	5			%	5	E	U	e	u								
0	1	1	0	6			&	6	F	V	f	v								
0	1	1	1	7			’	7	G	W	g	w								
1	0	0	0	8			(	8	H	X	h	x								
1	0	0	1	9			)	9	I	Y	i	y								
1	0	1	0	A			*	:	J	Z	j	z								
1	0	1	1	B			+	;	K	[	k	{								
1	1	0	0	C			,	<	L	¥	l	|								
1	1	0	1	D			−	=	M	]	m	}								
1	1	1	0	E			.	>	N	^	n	~								
1	1	1	1	F			/	?	O	_	o	DEL								

[00H to 7FH], [A0H to DFH] can be available for QR code.

QR Code (Kanji mode) Code table

	Shift JIS	0	1	2	3	4	5	6	7	8	9	A	B	C	D	E	F
	813F		SP	、	。	，	．	・	：	；	？	！	゛	゜	´	｀	¨
	814F	＾	￣	＿	ヽ	ヾ	ゝ	ゞ	〃	仝	々	〆	〇	―	―	‐	／
記	815F	＼	～	∥	｜	…	‥	‘	’	“	”	（	）	〔	〕	［	］
	816F	｛	｝	〈	〉	《	》	「	」	『	』	【	】	＋	－	±	×
号	8180	÷	＝	≠	＜	＞	≦	≧	∞	∴	♂	♀	°	′	″	℃	￥
	8190	＄	￠	￡	％	＃	＆	＊	＠	§	☆	★	○	●	◎	◇	
	819E		◆	□	■	△	▲	▽	▼	※	〒	→	←	↑	↓	〓	
英	824F	０	１	２	３	４	５	６	７	８	９						
・	825F		Ａ	Ｂ	Ｃ	Ｄ	Ｅ	Ｆ	Ｇ	Ｈ	Ｉ	Ｊ	Ｋ	Ｌ	Ｍ	Ｎ	Ｏ
数	826F	Ｐ	Ｑ	Ｒ	Ｓ	Ｔ	Ｕ	Ｖ	Ｗ	Ｘ	Ｙ	Ｚ					
字	8280		ａ	ｂ	ｃ	ｄ	ｅ	ｆ	ｇ	ｈ	ｉ	ｊ	ｋ	ｌ	ｍ	ｎ	ｏ
	8290	ｐ	ｑ	ｒ	ｓ	ｔ	ｕ	ｖ	ｗ	ｘ	ｙ	ｚ					
	829E		ぁ	あ	ぃ	い	ぅ	う	ぇ	え	ぉ	お	か	が	き	ぎ	く
ひ	82AE	ぐ	け	げ	こ	ご	さ	ざ	し	じ	す	ず	せ	ぜ	そ	ぞ	た
ら	82BE	だ	ち	ぢ	っ	つ	づ	て	で	と	ど	な	に	ぬ	ね	の	は
が	82CE	ば	ぱ	ひ	び	ぴ	ふ	ぶ	ぷ	へ	べ	ぺ	ほ	ぼ	ぽ	ま	み
な	82DE	む	め	も	ゃ	や	ゅ	ゆ	ょ	よ	ら	り	る	れ	ろ	ゎ	わ
	82EE	ゐ	ゑ	を	ん												
	833F		ァ	ア	ィ	イ	ゥ	ウ	ェ	エ	ォ	オ	カ	ガ	キ	ギ	ク
カ	834F	グ	ケ	ゲ	コ	ゴ	サ	ザ	シ	ジ	ス	ズ	セ	ゼ	ソ	ゾ	タ
タ	835F	ダ	チ	ヂ	ッ	ツ	ヅ	テ	デ	ト	ド	ナ	ニ	ヌ	ネ	ノ	ハ
カ	836F	バ	パ	ヒ	ビ	ピ	フ	ブ	プ	ヘ	ベ	ペ	ホ	ボ	ポ	マ	ミ
ナ	8380	ム	メ	モ	ャ	ヤ	ュ	ユ	ョ	ヨ	ラ	リ	ル	レ	ロ	ヮ	ワ
	8390	ヰ	ヱ	ヲ	ン	ヴ	ヵ	ヶ									
ギ 文	839E		Α	Β	Γ	Δ	Ε	Ζ	Η	Θ	Ι	Κ	Λ	Μ	Ν	Ξ	Ο
リ	83AE	Π	Ρ	Σ	Τ	Υ	Φ	Χ	Ψ	Ω							
シ	83BE		α	β	γ	δ	ε	ζ	η	θ	ι	κ	λ	μ	ν	ξ	ο
ア 字	83CE	π	ρ	σ	τ	υ	φ	χ	ψ	ω							
ロ	843F		А	Б	В	Г	Д	Е	Ё	Ж	З	И	Й	К	Л	М	Н
シ	844F	О	П	Р	С	Т	У	Ф	Х	Ц	Ч	Ш	Щ	Ъ	Ы	Ь	Э
ア	845F	Ю	Я														
文	846F		а	б	в	г	д	е	ё	ж	з	и	й	к	л	м	н
字	8480	о	п	р	с	т	у	ф	х	ц	ч	ш	щ	ъ	ы	ь	э
	8490	ю	я														

	Shift JIS	0	1	2	3	4	5	6	7	8	9	A	B	C	D	E	F
ア	889E		亜	唖	娃	阿	哀	愛	挨	姶	逢	葵	茜	穐	悪	握	渥
	88AE	旭	葦	芦	鯵	梓	圧	斡	扱	宛	姐	虻	飴	絢	綾	鮎	或
	88BE	粟	袷	安	庵	按	暗	案	闇	鞍	杏						
イ	88BE											以	伊	位	依	偉	囲
	88CE	夷	委	威	尉	惟	意	慰	易	椅	為	畏	異	移	維	緯	胃
	88DE	萎	衣	謂	違	遺	医	井	亥	域	育	郁	磯	一	壱	溢	逸
	88EE	稲	茨	芋	鰯	允	印	咽	員	因	姻	引	飲	淫	胤	蔭	
	893F		院	陰	隠	韻	吋										
ウ	893F							右	宇	烏	羽	迂	雨	卯	鵜	窺	丑
	894F	碓	臼	渦	嘘	唄	欝	蔚	鰻	姥	厩	浦	瓜	閏	噂	云	運
	895F	雲															
エ	895F		荏	餌	叡	営	嬰	影	映	曳	栄	永	泳	洩	瑛	盈	穎
	896F	頴	英	衛	詠	鋭	液	疫	益	駅	悦	謁	越	閲	榎	厭	円
	8980	園	堰	奄	宴	延	怨	掩	援	沿	演	炎	焔	煙	燕	猿	縁
	8990	艶	苑	薗	遠	鉛	鴛	塩									
オ	8990								於	汚	甥	凹	央	奥	往	応	
	899E		押	旺	横	欧	殴	王	翁	襖	鴬	鴎	黄	岡	沖	荻	億
	89AE	屋	憶	臆	桶	牡	乙	俺	卸	恩	温	穏	音				
カ	89AE													下	化	仮	何
	89BE	伽	価	佳	加	可	嘉	夏	嫁	家	寡	科	暇	果	架	歌	河
	89CE	火	珂	禍	禾	稼	箇	花	苛	茄	荷	華	菓	蝦	課	嘩	貨
	89DE	迦	過	霞	蚊	俄	峨	我	牙	画	臥	芽	蛾	賀	雅	餓	駕
	89EE	介	会	解	回	塊	壊	廻	快	怪	悔	恢	懐	戒	拐	改	
	8A3F		魁	晦	械	海	灰	界	皆	絵	芥	蟹	開	階	貝	凱	劾
	8A4F	外	咳	害	崖	慨	概	涯	碍	蓋	街	該	鎧	骸	浬	馨	蛙
	8A5F	垣	柿	蛎	鈎	劃	嚇	各	廓	拡	撹	格	核	殻	獲	確	穫
	8A6F	覚	角	赫	較	郭	閣	隔	革	学	岳	楽	額	顎	掛	笠	樫
	8A80	橿	梶	鰍	潟	割	喝	恰	括	活	渇	滑	葛	褐	轄	且	鰹
	8A90	叶	椛	樺	鞄	株	兜	竈	蒲	釜	鎌	噛	鴨	栢	茅	萱	
	8A9E		粥	刈	苅	瓦	乾	侃	冠	寒	刊	勘	勧	巻	喚	堪	姦
	8AAE	完	官	寛	干	幹	患	感	慣	憾	換	敢	柑	桓	棺	款	歓
	8ABE	汗	漢	澗	潅	環	甘	監	看	竿	管	簡	緩	缶	翰	肝	艦
	8ACE	莞	観	諫	貫	還	鑑	間	閑	関	陥	韓	館	舘	丸	含	岸
	8ADE	巌	玩	癌	眼	岩	翫	贋	雁	頑	顔	願					

	Shift JIS	0	1	2	3	4	5	6	7	8	9	A	B	C	D	E	F
キ	8ADE												企	伎	危	喜	器
	8AEE	基	奇	嬉	寄	岐	希	幾	忌	揮	机	旗	既	期	棋	棄	
	8B3F		機	帰	毅	気	汽	畿	祈	季	稀	紀	徽	規	記	貴	起
	8B4F	軌	輝	飢	騎	鬼	亀	偽	儀	妓	宜	戲	技	擬	欺	犠	疑
	8B5F	祇	義	蟻	誼	議	掬	菊	鞠	吉	吃	喫	桔	橘	詰	砧	杵
	8B6F	黍	却	客	脚	虐	逆	丘	久	仇	休	及	吸	宮	弓	急	救
	8B80	朽	求	汲	泣	灸	球	究	窮	笈	級	糾	給	旧	牛	去	居
	8B90	巨	拒	拠	挙	渠	虚	許	距	鋸	漁	禦	魚	亨	享	京	
	8B9E		供	侠	僑	兇	競	共	凶	協	匡	卿	叫	喬	境	峡	強
	8BAE	彊	怯	恐	恭	挟	教	橋	況	狂	狭	矯	胸	脅	興	蕎	郷
	8BBE	鏡	響	饗	驚	仰	凝	尭	暁	業	局	曲	極	玉	桐	粁	僅
	8BCE	勤	均	巾	錦	斤	欣	欽	琴	禁	禽	筋	緊	芹	菌	衿	襟
	8BDE	謹	近	金	吟	銀											
ク	8BDE						九	倶	句	区	狗	玖	矩	苦	躯	駆	駈
	8BEE	駒	具	愚	虞	喰	空	偶	寓	遇	隅	串	櫛	釧	屑	屈	
	8C3F		掘	窟	沓	靴	轡	窪	熊	隈	粂	栗	繰	桑	鍬	勲	君
	8C4F	薫	訓	群	軍	郡											
ケ	8C4F						卦	袈	祁	係	傾	刑	兄	啓	圭	珪	型
	8C5F	契	形	径	恵	慶	慧	憩	掲	携	敬	景	桂	渓	畦	稽	系
	8C6F	経	継	繋	罫	茎	荊	蛍	計	詣	警	軽	頚	鶏	芸	迎	鯨
	8C80	劇	戟	撃	激	隙	桁	傑	欠	決	潔	穴	結	血	訣	月	件
	8C90	倹	倦	健	兼	券	剣	喧	圏	堅	嫌	建	憲	懸	拳	捲	
	8C9E		検	権	牽	犬	献	研	硯	絹	県	肩	見	謙	賢	軒	遣
	8CAE	鍵	険	顕	験	鹸	元	原	厳	幻	弦	減	源	玄	現	絃	舷
	8CBE	言	諺	限													
コ	8CBE				乎	個	古	呼	固	姑	孤	己	庫	弧	戸	故	枯
	8CCE	湖	狐	糊	袴	股	胡	菰	虎	誇	跨	鈷	雇	顧	鼓	五	互
	8CDE	伍	午	呉	吾	娯	後	御	悟	梧	檎	瑚	碁	語	誤	護	醐
	8DEE	乞	鯉	交	佼	侯	候	倖	光	公	功	効	勾	厚	口	向	
	8D3F		后	喉	坑	垢	好	孔	孝	宏	工	巧	巷	幸	広	庚	康
	8D4F	弘	恒	慌	抗	拘	控	攻	昂	晃	更	杭	校	梗	構	江	洪
	8D5F	浩	港	溝	甲	皇	硬	稿	糠	紅	紘	絞	綱	耕	考	肯	肱
	8D6F	腔	膏	航	荒	行	衡	講	貢	購	郊	酵	鉱	砿	鋼	閤	降
	8D80	項	香	高	鴻	剛	劫	号	合	壕	拷	濠	豪	轟	麹	克	刻

	Shift JIS	0	1	2	3	4	5	6	7	8	9	A	B	C	D	E	F
コ	8D90	告	国	穀	酷	鵠	黒	獄	漉	腰	甑	忽	惚	骨	狛	込	
	8D9E		此	頃	今	困	坤	墾	婚	恨	懇	昏	昆	根	梱	混	痕
	8DAE	紺	艮	魂													
サ	8DAE				些	佐	叉	唆	嵯	左	差	査	沙	瑳	砂	詐	鎖
	8DBE	裟	坐	座	挫	債	催	再	最	哉	塞	妻	宰	彩	才	採	栽
	8DCE	歳	済	災	采	犀	砕	砦	祭	斎	細	菜	裁	載	際	剤	在
	8DDE	材	罪	財	冴	坂	阪	堺	榊	肴	咲	崎	埼	碕	鷺	作	削
	8DEE	咋	搾	昨	朔	柵	窄	策	索	錯	桜	鮭	笹	匙	冊	刷	
	8E3F		察	拶	撮	擦	札	殺	薩	雑	皐	鯖	捌	錆	鮫	皿	晒
	8E4F	三	傘	参	山	惨	撒	散	桟	燦	珊	産	算	纂	蚕	讃	賛
	8E5F	酸	餐	斬	暫	残											
シ	8E5F						仕	仔	伺	使	刺	司	史	嗣	四	士	始
	8E6F	姉	姿	子	屍	市	師	志	思	指	支	孜	斯	施	旨	枝	止
	8E80	死	氏	獅	祉	私	糸	紙	紫	肢	脂	至	視	詞	詩	試	誌
	8E90	諮	資	賜	雌	飼	歯	事	似	侍	児	字	寺	慈	持	時	
	8E9E		次	滋	治	爾	璽	痔	磁	示	而	耳	自	蒔	辞	汐	鹿
	8EAE	式	識	鳴	竺	軸	宍	雫	七	叱	執	失	嫉	室	悉	湿	漆
	8EBE	疾	質	実	蔀	篠	偲	柴	芝	屡	蕊	縞	舎	写	射	捨	赦
	8ECE	斜	煮	社	紗	者	謝	車	遮	蛇	邪	借	勺	尺	杓	灼	爵
	8EDE	酌	釈	錫	若	寂	弱	惹	主	取	守	手	朱	殊	狩	珠	種
	8EEE	腫	趣	酒	首	儒	受	呪	寿	授	樹	綬	需	囚	収	周	
	8F3F		宗	就	州	修	愁	拾	洲	秀	秋	終	繍	習	臭	舟	蒐
	8F4F	衆	襲	讐	蹴	輯	週	酋	酬	集	醜	什	住	充	十	従	戎
	8F5F	柔	汁	渋	獣	縦	重	銃	叔	夙	宿	淑	祝	縮	粛	塾	熟
	8F6F	出	術	述	俊	峻	春	瞬	竣	舜	駿	准	循	旬	楯	殉	淳
	8F80	準	潤	盾	純	巡	遵	醇	順	処	初	所	暑	曙	渚	庶	緒
	8F90	署	書	薯	藷	諸	助	叙	女	序	徐	恕	鋤	除	傷	償	
	8F9E		勝	匠	升	召	哨	商	唱	嘗	奨	妾	娼	宵	将	小	少
	8FAE	尚	庄	床	廠	彰	承	抄	招	掌	捷	昇	昌	昭	晶	松	梢
	8FBE	樟	樵	沼	消	渉	湘	焼	焦	照	症	省	硝	礁	祥	称	章
	8FCE	笑	粧	紹	肖	菖	蔣	蕉	衝	裳	訟	証	詔	詳	象	賞	醤
	8FDE	鉦	鍾	鐘	障	鞘	上	丈	丞	乗	冗	剰	城	場	壌	嬢	常
	8FEE	情	擾	条	杖	浄	状	畳	穣	蒸	譲	醸	錠	嘱	埴	飾	
	903F		拭	植	殖	燭	織	職	色	触	食	蝕	辱	尻	伸	信	侵

	Shift JIS	0	1	2	3	4	5	6	7	8	9	A	B	C	D	E	F
シ	904F	唇	娠	寝	審	心	慎	振	新	晋	森	榛	浸	深	申	疹	真
	905F	神	秦	紳	臣	芯	薪	親	診	身	辛	進	針	震	人	仁	刃
	906F	塵	壬	尋	甚	尽	腎	訊	迅	陣	靭						
ス	906F											笥	諏	須	酢	図	厨
	9080	逗	吹	垂	帥	推	水	炊	睡	粋	翠	衰	遂	酔	錐	錘	随
	9090	瑞	髄	崇	嵩	数	枢	趨	雛	据	杉	椙	菅	頗	雀	裾	
	909E		澄	摺	寸												
セ	909E					世	瀬	畝	是	凄	制	勢	姓	征	性	成	政
	90AE	整	星	晴	棲	栖	正	清	牲	生	盛	精	聖	声	製	西	誠
	90BE	誓	請	逝	醒	青	静	斉	税	脆	隻	席	惜	戚	斥	昔	析
	90CE	石	積	籍	績	脊	責	赤	跡	蹟	碩	切	拙	接	摂	折	設
	90DE	窃	節	説	雪	絶	舌	蝉	仙	先	千	占	宣	専	尖	川	戦
	90EE	扇	撰	栓	栴	泉	浅	洗	染	潜	煎	煽	旋	穿	箭	線	
	913F		繊	羨	腺	舛	船	薦	詮	賤	践	選	遷	銭	銑	閃	鮮
	914F	前	善	漸	然	全	禪	繕	膳	糎							
ソ	914F										噌	塑	岨	措	曾	曾	楚
	915F	狙	疏	疎	礎	祖	租	粗	素	組	蘇	訴	阻	遡	鼠	僧	創
	916F	双	叢	倉	喪	壮	奏	爽	宋	層	匝	惣	想	捜	掃	挿	掻
	9180	操	早	曹	巣	槍	槽	漕	燥	争	痩	相	窓	糟	総	綜	聡
	9190	草	荘	葬	蒼	藻	装	走	送	遭	鎗	霜	騒	像	増	憎	
	919E		臓	蔵	贈	造	促	側	則	即	息	捉	束	測	足	速	俗
	91AE	属	賊	族	続	卒	袖	其	揃	存	孫	尊	損	村	遜		
タ	91AE															他	多
	91BE	太	汰	詑	唾	堕	妥	惰	打	柁	舵	楕	陀	駄	騨	体	堆
	91CE	対	耐	岱	帯	待	怠	態	戴	替	泰	滞	胎	腿	苔	袋	貸
	91DE	退	逮	隊	黛	鯛	代	台	大	第	醍	題	鷹	滝	瀧	卓	啄
	91EE	宅	托	択	拓	沢	濯	琢	託	鐸	濁	諾	茸	凧	蛸	只	
	923F		叩	但	達	辰	奪	脱	巽	竪	辿	棚	谷	狸	鱈	樽	誰
	924F	丹	単	嘆	坦	担	探	旦	歎	淡	湛	炭	短	端	箪	綻	耽
	925F	胆	蛋	誕	鍛	団	壇	弾	断	暖	檀	段	男	談			
チ	925F														値	知	地
	926F	弛	恥	智	池	痴	稚	置	致	蜘	遲	馳	築	畜	竹	筑	蓄
	9280	逐	秩	窒	茶	嫡	着	中	仲	宙	忠	抽	昼	柱	注	虫	衷
	9290	註	酎	鋳	駐	樗	瀦	猪	苧	著	貯	丁	兆	凋	喋	寵	

	Shift JIS	0	1	2	3	4	5	6	7	8	9	A	B	C	D	E	F
チ	929E		帖	帳	庁	弔	張	彫	徴	懲	挑	暢	朝	潮	牒	町	眺
	92AE	聴	脹	腸	蝶	調	諜	超	跳	銚	長	頂	鳥	勅	捗	直	朕
	92BE	沈	珍	賃	鎮	陳											
ツ	92BE						津	墜	椎	槌	追	鎚	痛	通	塚	栂	掴
	92CE	槻	佃	漬	柘	辻	蔦	綴	鍔	椿	潰	坪	壺	嬬	紬	爪	吊
	92DE	釣	鶴														
テ	92DE			亭	低	停	偵	剃	貞	呈	堤	定	帝	底	庭	廷	弟
	92EE	悌	抵	挺	提	梯	汀	碇	禎	程	締	艇	訂	諦	蹄	逓	
	933F		邸	鄭	釘	鼎	泥	摘	擢	敵	滴	的	笛	適	鏑	溺	哲
	934F	徹	撤	轍	迭	鉄	典	填	天	展	店	添	纏	甜	貼	転	顛
	935F	点	伝	殿	澱	田	電										
ト	935F							兎	吐	堵	塗	妬	屠	徒	斗	杜	渡
	936F	登	菟	賭	途	都	鍍	砥	砺	努	度	土	奴	怒	倒	党	冬
	9380	凍	刀	唐	塔	塘	套	宕	島	嶋	悼	投	搭	東	桃	梼	棟
	9390	盗	淘	湯	涛	灯	燈	当	痘	祷	等	答	筒	糖	統	到	
	939E		董	蕩	藤	討	謄	豆	踏	逃	透	鐙	陶	頭	騰	闘	働
	93AE	動	同	堂	導	憧	撞	洞	瞳	童	胴	萄	道	銅	峠	鴇	匿
	93BE	得	徳	涜	特	督	禿	篤	毒	独	読	栃	橡	凸	突	椴	届
	93CE	鳶	苫	寅	酉	瀞	噸	屯	惇	敦	沌	豚	遁	頓	呑	曇	鈍
ナ	93DE	奈	那	内	乍	凪	薙	謎	灘	捺	鍋	楢	馴	縄	畷	南	楠
	93EE	軟	難	汝													
ニ	93EE				二	尼	弐	迩	匂	賑	肉	虹	廿	日	乳	入	
	943F		如	尿	韮	任	妊	忍	認								
ヌ	943F									濡							
ネ	943F										禰	祢	寧	葱	猫	熱	年
	944F	念	捻	撚	燃	粘											
ノ	944F						乃	廼	之	埜	嚢	悩	濃	納	能	脳	膿
	945F	農	覗	蚤													
ハ	945F				巴	把	播	覇	杷	波	派	琶	破	婆	罵	芭	馬
	946F	俳	廃	拝	排	敗	杯	盃	牌	背	肺	輩	配	倍	培	媒	梅
	9480	楳	煤	狽	買	売	賠	陪	這	蝿	秤	矧	萩	伯	剥	博	拍
	9490	柏	泊	白	箔	粕	舶	薄	迫	曝	漠	爆	縛	莫	駁	麦	
	949E		函	箱	硲	箸	肇	筈	櫨	幡	肌	畑	畠	八	鉢	溌	発
	94AE	醗	髪	伐	罰	抜	筏	閥	鳩	噺	塙	蛤	隼	伴	判	半	反

	Shift JIS	0	1	2	3	4	5	6	7	8	9	A	B	C	D	E	F
ハ	94BE	叛	帆	搬	斑	板	氾	汎	版	犯	班	畔	繁	般	藩	販	範
	94CE	釆	煩	頒	飯	挽	晩	番	盤	磐	蕃	蛮					
ヒ	94CE												匪	卑	否	妃	庇
	94DE	彼	悲	扉	批	披	斐	比	泌	疲	皮	碑	秘	緋	罷	肥	被
	94EE	誹	費	避	非	飛	樋	簸	備	尾	微	枇	毘	琵	眉	美	
	953F		鼻	柊	稗	匹	疋	髭	彦	膝	菱	肘	弼	必	畢	筆	逼
	954F	桧	姫	媛	紐	百	謬	俵	彪	標	氷	漂	瓢	票	表	評	豹
	955F	廟	描	病	秒	苗	錨	鋲	蒜	蛭	鰭	品	彬	斌	浜	瀕	貧
	956F	賓	頻	敏	瓶												
フ	956F					不	付	埠	夫	婦	富	冨	布	府	怖	扶	敷
	9580	斧	普	浮	父	符	腐	膚	芙	譜	負	賦	赴	阜	附	侮	撫
	9590	武	舞	葡	蕪	部	封	楓	風	葺	蕗	伏	副	復	幅	服	
	959E		福	腹	複	覆	淵	弗	払	沸	仏	物	鮒	分	吻	噴	墳
	95AE	憤	扮	焚	奮	粉	糞	紛	雰	文	聞						
ヘ	95AE											丙	併	兵	塀	幣	平
	95BE	弊	柄	並	蔽	閉	陛	米	頁	僻	壁	癖	碧	別	瞥	蔑	箆
	95CE	偏	変	片	篇	編	辺	返	遍	便	勉	娩	弁	鞭			
ホ	95CE														保	舗	鋪
	95DE	圃	捕	歩	甫	補	輔	穂	募	墓	慕	戊	暮	母	簿	菩	倣
	95EE	俸	包	呆	報	奉	宝	峰	峯	崩	庖	抱	捧	放	方	朋	
	963F		法	泡	烹	砲	縫	胞	芳	萌	蓬	蜂	褒	訪	豊	邦	鋒
	964F	飽	鳳	鵬	乏	亡	傍	剖	坊	妨	帽	忘	忙	房	暴	望	某
	965F	棒	冒	紡	肪	膨	謀	貌	貿	鉾	防	吠	頬	北	僕	卜	墨
	966F	撲	朴	牧	睦	穆	釦	勃	没	殆	堀	幌	奔	本	翻	凡	盆
マ	9680	摩	磨	魔	麻	埋	妹	昧	枚	毎	哩	槙	幕	膜	枕	鮪	柾
	9690	鱒	桝	亦	俣	又	抹	末	沫	迄	侭	繭	麿	万	慢	満	
	969E		漫	蔓													
ミ	969E				味	未	魅	巳	箕	岬	密	蜜	湊	蓑	稔	脈	妙
	96AE	粍	民	眠													
ム	96AE				務	夢	無	牟	矛	霧	鵡	椋	婿	娘			
メ	96AE														冥	名	命
	96BE	明	盟	迷	銘	鳴	姪	牝	滅	免	棉	綿	緬	面	麺		
モ	96BE															摸	模
	96CE	茂	妄	孟	毛	猛	盲	網	耗	蒙	儲	木	黙	目	杢	勿	餅

	Shift JIS	0	1	2	3	4	5	6	7	8	9	A	B	C	D	E	F
モ	96DE	尤	戻	籾	貰	問	悶	紋	門	匁							
ヤ	96DE										也	冶	夜	爺	耶	野	弥
	96EE	矢	厄	役	約	薬	訳	躍	靖	柳	薮	鑓					
ユ	96EE												愉	愈	油	癒	
	973F		諭	輸	唯	佑	優	勇	友	宥	幽	悠	憂	揺	有	柚	湧
	974F	涌	猶	猷	由	祐	裕	誘	遊	邑	郵	雄	融	夕			
ヨ	974F														予	余	与
	975F	誉	輿	預	傭	幼	妖	容	庸	揚	揺	擁	曜	楊	様	洋	溶
	976F	熔	用	窯	羊	耀	葉	蓉	要	謡	踊	遥	陽	養	慾	抑	欲
	9780	沃	浴	翌	翼	淀											
ラ	9780						羅	螺	裸	来	莱	頼	雷	洛	絡	落	酪
	9790	乱	卵	嵐	欄	濫	藍	蘭	覧								
リ	9790									利	吏	履	李	梨	理	璃	
	979E		痢	裏	裡	里	離	陸	律	率	立	葎	掠	略	劉	流	溜
	97AE	琉	留	硫	粒	隆	竜	龍	侶	慮	旅	虜	了	亮	僚	両	凌
	97BE	寮	料	梁	涼	猟	療	瞭	稜	糧	良	諒	遼	量	陵	領	力
	97CE	緑	倫	厘	林	淋	燐	琳	臨	輪	隣	鱗	麟				
ル	97CE													瑠	塁	涙	累
	97DE	類															
レ	97DE		令	伶	例	冷	励	嶺	怜	玲	礼	苓	鈴	隷	零	霊	麗
	97EE	齢	暦	歴	列	劣	烈	裂	廉	恋	憐	漣	煉	簾	練	聯	
	983F		蓮	連	錬												
ロ	983F					呂	魯	櫓	炉	賂	路	露	労	婁	廊	弄	朗
	984F	楼	榔	浪	漏	牢	狼	篭	老	聾	蠟	郎	六	麓	禄	肋	録
	985F	論															
ワ	985F		倭	和	話	歪	賄	脇	惑	枠	鷲	亙	亘	鰐	詫	藁	蕨
	986F	椀	湾	碗	腕												

	Shift JIS	0	1	2	3	4	5	6	7	8	9	A	B	C	D	E	F
一	989E		弍	丐	丕												
丨	989E					个	丱										
丶	989E							丶	丼								
丿	989E									丿	乂	乖	乘				
乙	989E													亂			
亅	989E														亅	豫	事
	98AE	舒															
二	98AE		弍	于	亞	亟											
亠	98AE						亠	亢	亦	亳	亶						
人	98AE											从	仍	仄	仆	仂	仗
	98BE	仞	仭	仟	价	伉	佚	估	佛	佝	佗	佇	佶	侈	侏	侘	佻
	98CE	佩	佰	侑	佯	來	侖	儘	俱	俟	俎	俘	俛	俑	俚	俐	俤
	98DE	俥	倚	倨	倔	倪	倥	倅	伛	倣	倡	倩	倬	俾	俯	們	倆
	98EE	偃	假	會	偕	偐	偶	做	偖	偬	偸	傀	傚	傅	傴	傲	
	993F		僉	僊	傳	僂	僖	僞	僥	僭	僭	僮	價	僵	儉	儁	儂
	994F	儖	儕	儔	儚	儡	儺	儷	儼	儻							
儿	994F										儿	兀	兒	兌	兔	兢	競
入	995F	兩	兪														
八	995F			兮	冀												
冂	995F					冂	囘	册	冉	冏	冑	冓	冕				
冖	995F													冖	冤	冠	冢
	996F	冩	冪														
冫	996F			冫	决	冱	冲	冰	况	冽	凅	凉	凛				
几	996F													几	處	凩	凭
	9980	凰															
凵	9980		凵	函													
刀	9980				刄	刋	刔	刎	刧	刪	刮	刳	刹	剏	剄	剋	剌
	9990	剞	剔	剪	剴	剩	剳	剿	剽	劍	劔	劒	剱	劈	劑	辨	
	999E		辨														
力	999E			劬	劭	劼	劵	勁	勍	勗	勞	勣	勦	飭	勠	勳	勵
	99AE	勸															
勹	99AE		勹	匆	匈	甸	匍	匐	匏								
匕	99AE									匕							
匚	99AE										匚	匣	匯	匱	匳		

	Shift JIS	0	1	2	3	4	5	6	7	8	9	A	B	C	D	E	F
匚	99AE															匚	區
十	99BE	卆	卅	丗	卉	卍	準										
卜	99BE							卞									
卩	99BE								卩	卮	夘	卻	卷				
厂	99BE													厂	厖	厠	厦
	99CE	厥	厮	厰													
厶	99CE				厶	參	簒										
又	99CE							雙	叟	曼	燮						
口	99CE											叮	叨	叭	叺	吁	吽
	99DE	呀	听	吭	吼	吮	吶	吩	吝	呎	咏	呵	咎	呟	呱	呷	呰
	99EE	咒	呻	咀	呪	咄	咐	咆	哇	咢	咸	咥	咬	哄	哈	咨	
	9A3F		咫	哂	咤	咾	咼	哘	哥	哦	唏	唔	哽	哮	哭	哺	哢
	9A4F	唹	啀	啣	啌	售	啜	啅	啖	啗	唸	唳	啝	喙	喀	咯	喊
	9A5F	喟	啻	啾	喘	喞	單	啼	喃	喻	喇	喨	嗚	嗅	嗟	嗄	嗜
	9A6F	嗤	嗔	嘔	嗷	嘖	嗾	嗽	嘛	嗹	噎	噐	營	嘴	嘶	嘲	嘸
	9A80	噫	噤	嘯	噬	噪	嚆	嚀	嚊	嚠	嚔	嚏	嚥	嚮	嚶	嚴	囂
	9A90	嚼	囁	囃	囀	囈	囎	囑	囓								
囗	9A90									囗	囮	囹	圀	囿	圄	圉	
	9A9E		圈	國	圍	圓	團	圖	嗇	圜							
土	9A9E										圦	圷	圸	坎	圻	址	坏
	9AAE	坩	埀	垈	坡	坤	坨	垓	垠	垳	垤	垪	垰	埃	埆	埔	埒
	9ABE	埇	堊	埖	埣	堋	堙	塝	塔	堡	塢	塋	塗	毀	堺	堤	堰
	9ACE	壑	壩	壺	壼	壿	壞	壥	壻	壼	壟	壓	壑	壙	壙	壘	壥
	9ADE	壘	壤	壟													
士	9ADE				壯	壺	壹	壻	壺	壽							
夂	9ADE										夂						
夊	9ADE											夊	夏				
夕	9ADE													夛	梦	夥	
大	9ADE																夬
	9AEE	夭	夲	夸	夾	竒	奕	奐	奎	奚	奘	奢	奠	奧	奬	奩	
女	9B3F		奸	妁	妝	佞	侫	妣	妲	姆	姨	姜	妍	姙	姚	娥	娟
	9B4F	娑	娜	娉	娚	婀	婬	婉	娵	娶	婢	婪	媚	媼	媾	嫋	嫂
	9B5F	媽	嫣	嫗	嫦	嫩	嫖	嫺	嫻	嬌	嬋	嬖	嬲	嫐	嬪	嬶	嬾
	9B6F	孃	孅	孀													

	Shift JIS	0	1	2	3	4	5	6	7	8	9	A	B	C	D	E	F
子	9B6F				孑	孕	孚	孛	孥	孩	孰	孳	孵	學	斈	孺	
宀	9B6F																宀
	9B80	它	宦	宸	寃	寇	寉	寔	寐	寤	實	寢	寞	寥	寫	寰	寶
	9B90	寳															
寸	9B90		尅	將	專	對											
小	9B90						尗	尠									
尢	9B90								尢	尨							
尸	9B90										尸	尹	屁	屆	屎	屓	
	9B9E		屐	屏	孱	屬											
屮	9B9E						屮										
山	9B9E							屹	屶	屹	岌	岑	岔	妛	岫	岻	岼
	9BAE	岷	岨	峇	岱	岩	岐	岑	峽	峺	峭	嶌	峪	崋	崕	崗	嵜
	9BBE	崟	崛	崑	崔	崢	崚	崙	崘	嵌	嵒	嵎	嵋	嵬	嵳	嶇	嶄
	9BCE	嶔	嶂	嶢	嶝	嶠	嶼	嶽	巉	巍	巒	巓	巖	巛	巫	巒	
巛	9BCE																巛
工	9BDE	巫															
巳	9BDE		已	巵													
巾	9BDE				帋	帚	帙	帑	帛	帶	帷	幄	幃	幀	幎	幗	幔
	9BEE	幟	幢	幣	幫												
干	9BEE					幵	并										
幺	9BEE							幺	麼								
广	9BEE									广	庠	廁	廂	廈	廏	廢	
	9C3F		廖	廣	廝	廚	廛	廢	廡	廨	廩	廬	廳	廰	廱		
廴	9C3F															廴	廸
廾	9C4F	廾	弁	弉	彝	彜											
弋	9C4F						弋	弑									
弓	9C4F								弓	弩	弭	弸	彁	彈	彌	彎	弯
彑	9C5F	彑	彖	彗	彙												
彡	9C5F					彡	彭										
彳	9C5F							彳	彷	徃	徂	彿	徊	很	徑	徇	從
	9C6F	徙	徘	徠	徨	徭	徼										
心	9C6F							忖	忻	忤	忸	忱	忝	悳	忿	怡	恠
	9C80	怙	怐	怩	怎	怱	怛	怕	怫	怦	怏	怺	恚	恁	恪	恷	恂
	9C90	恊	恆	恍	恣	恃	恤	恂	恬	恫	恙	悁	悍	惧	悃	悚	

	Shift JIS	0	1	2	3	4	5	6	7	8	9	A	B	C	D	E	F
心	9C9E		悄	悛	悖	悗	悒	悧	悋	惡	悸	惠	惓	悴	忰	悽	惆
	9CAE	悵	惘	慍	愕	愆	惶	惷	愀	惴	惺	愃	愡	惻	惱	愍	愎
	9CBE	慇	愾	愨	愧	慊	愿	愼	愬	愴	愽	慂	慄	慳	慷	慘	慙
	9CCE	慚	慫	慴	慯	慥	慱	慟	慝	慓	慵	憙	憖	憩	憬	憔	憚
	9CDE	憊	憑	憫	憮	懌	懊	應	懷	懈	懃	懆	憺	懋	罹	懷	懦
	9CEE	懣	懶	懺	懴	懸	懽	懼	懾	戀							
戈	9CEE										戈	戉	戊	戌	戎	戔	
	9D3F		戛	戞	戡	戮	戰	戲	戳								
戸	9D3F									扁							
手	9D3F										扎	扞	扣	扛	扠	扨	扼
	9D4F	抂	抉	抆	抒	抓	抖	拔	抹	抔	拗	拑	抻	拏	拿	拆	擔
	9D5F	拈	拜	拌	拊	拂	拇	抛	拉	挌	拮	拱	挧	挂	挈	拯	拵
	9D6F	捐	挾	捍	搜	捏	掖	掎	掀	掫	捶	掣	掏	掉	掟	掵	捫
	9D80	捩	掾	揩	揀	揆	揣	揉	插	揶	揄	搖	搴	搆	搓	搦	搶
	9D90	攝	搗	搨	搏	摧	摯	摶	摎	攪	撕	撓	撥	撩	撈	撼	
	9D9E		據	擒	擡	擇	擢	擘	擂	擱	擧	舉	擠	擡	抬	擣	擯
	9DAE	攬	擶	擴	擲	擺	攀	攝	攘	攜	攢	攤	攀	攫			
攴	9DAE														攴	攵	攷
	9DBE	收	攸	畋	效	敖	敕	敍	敘	敲	敝	敲	數	斂	斃	變	
斗	9DBE																斛
	9DCE	斟															
斤	9DCE		斫	斷													
方	9DCE				旃	旆	旁	旄	旌	旒	旛	旙					
旡	9DCE												旡	旡			
日	9DCE														旱	杲	昊
	9DDE	昃	旻	杳	昵	昶	昴	昜	晏	晄	晉	晁	晞	晝	晤	晧	晨
	9DEE	晟	晢	晰	暃	暈	暎	暉	暄	暘	暝	曁	暹	曉	暾	暼	
	9E3F		曄	暸	曖	曚	曠	昿	曦	曩							
曰	9E3F										曰	曳	曷				
月	9E3F													朏	朗	朞	朦
	9E4F	朧	霸														
木	9E4F			朮	朿	朶	杁	朸	朷	杆	杞	杠	杙	杣	杤	枉	杰
	9E5F	枩	杼	杪	枌	枋	枦	枡	枅	枷	柯	枴	柬	枳	柩	枸	柤
	9E6F	柞	柝	柢	柮	枹	柎	柆	柧	檜	栞	框	栩	桀	桍	栲	桎

	Shift JIS	0	1	2	3	4	5	6	7	8	9	A	B	C	D	E	F
木	9E80	梳	椦	桙	档	桷	桿	梟	梏	梭	梔	條	梛	梃	檮	梹	桴
	9E90	梵	梠	梺	椏	梍	桾	椁	棊	椈	棘	椢	椦	棡	椩	椪	
	9E9E		榗	棧	棕	椶	椒	椄	棗	棣	椥	棹	棠	棯	椨	椪	椚
	9EAE	椣	椡	棆	楹	楷	楜	楸	楫	楔	楾	楮	椹	楴	椽	楙	椰
	9EBE	楡	楞	楝	榁	楪	榲	榮	槐	榿	槁	槓	榾	槎	寨	槊	槝
	9ECE	榻	槃	榧	樮	榑	榠	榜	榕	榴	槞	榨	樂	樛	槿	權	槹
	9EDE	槲	槧	樅	榱	樞	槭	樣	橥	樊	樒	櫁	樣	樓	橄	樹	橲
	9EEE	樶	橸	橇	橢	橙	橦	橈	樸	樢	檜	槍	槌	樂	檄	檢	槽
	9F3F		檗	蘖	檻	櫃	櫂	檸	檳	檬	櫞	櫑	櫟	檪	櫚	櫪	櫻
	9F4F	欅	蘗	櫺	欒	欖	鬱	欟									
欠	9F4F								欸	欷	盜	欹	飲	歇	歃	歉	歐
	9F5F	歙	歡	歛	歟	歡											
止	9F5F						歸										
歹	9F5F							歹	歿	殀	殄	殃	殍	殘	殆	殞	殤
	9F6F	殪	殫	殯	殲	殲											
殳	9F6F						殳	毅	殼	毆							
毋	9F6F										毋	毓					
毛	9F6F												毫	毬	毫	毳	毯
	9F80	麾	氈														
氏	9F80			氓													
气	9F80				气	氛	氤	氣									
水	9F80								汞	汕	汢	汪	沂	沍	沚	沁	沛
	9F90	汾	汨	汳	沒	沐	泄	泱	泓	沽	泗	泅	泝	沮	沱	沾	
	9F9E		泄	泛	泯	泙	泪	洟	衍	洶	洫	洽	洸	洙	洵	洳	洒
	9FAE	洌	浣	涓	浤	浚	浹	浙	涎	涕	濤	涅	淹	渕	渊	涵	淇
	9FBE	淦	涸	淆	淬	淞	淌	淨	淒	淅	淺	淙	淤	淕	淪	淮	渭
	9FCE	湮	渮	渙	湲	湟	渾	渣	湫	渫	湶	湍	渟	湃	渺	溂	渤
	9FDE	滿	溢	游	溂	溪	溘	滉	溷	滓	溽	溯	滄	溲	滔	滕	溏
	9FEE	溥	滂	溟	潁	漑	灌	滬	滸	滾	漿	滲	漱	滯	漲	滌	
	E03F		漾	漓	滷	澆	潺	潸	澁	澀	潯	潛	濳	潭	澂	潼	潘
	E04F	澎	澑	濂	潦	澳	澣	澡	澤	澹	濆	澪	濟	濕	濬	濔	濘
	E05F	濱	濮	濛	瀉	瀋	濺	瀑	瀁	瀏	濾	瀛	瀚	潺	瀝	瀘	瀟
	E06F	瀰	瀾	瀲	灑	灣											
火	E06F						炙	炒	炯	烱	炬	炸	炳	炮	烟	烋	烝

	Shift JIS	0	1	2	3	4	5	6	7	8	9	A	B	C	D	E	F
火	E080	烙	焉	烽	焜	焙	煥	煕	熙	煦	煢	煌	煖	煬	熏	燻	熄
	E090	熕	熨	熬	燗	熹	熾	燒	燉	燔	燎	燠	燬	燧	燵	燼	
	E09E		燹	燿	爍	爐	爛	爨									
爪	E09E								爭	爬	爰	爲					
爻	E09E												爻	爼			
爿	E09E														爿	牀	牆
	E0AE	牋	牘														
牛	E0AE			牴	牾	犂	犁	犇	犒	犖	犢	犧					
犬	E0AE												犹	犲	狃	狆	狄
	E0BE	狎	狒	狢	狠	狡	狹	狷	倏	猗	猊	猜	猖	猝	猴	猯	猩
	E0CE	猥	猾	獎	獏	默	獗	獪	獨	獰	獸	獵	獻	獺			
王	E0CE														珈	玳	珎
	E0DE	玻	珀	珥	珮	珞	璢	琅	瑯	琥	珸	琲	瑯	瑕	琿	瑟	瑙
	E0EE	瑁	瑜	瑩	瑰	瑣	瑪	瑶	瑾	璋	璞	璧	瓊	瓏	瓔	珱	
瓜	E13F		瓠	瓣													
瓦	E13F				瓩	瓧	瓮	瓲	瓰	瓱	瓸	瓷	甄	甃	瓆	甌	甎
	E14F	甍	甕	甓													
甘	E14F				甞												
生	E14F					甦											
用	E14F						甬										
田	E14F							甼	畑	畠	畊	畉	畛	畝	畚	畩	畤
	E15F	畧	畫	畭	畸	當	疆	疇	畴	疊	疉	疊					
疒	E15F												疔	疚	疝	疥	疣
	E16F	痂	疳	痃	疵	疽	疸	疼	疱	痍	痊	痒	痙	痣	痎	痾	痿
	E180	瘡	瘁	瘀	痺	瘤	瘧	瘋	瘍	瘉	瘟	瘧	瘠	瘡	瘢	瘤	瘴
	E190	瘻	瘺	瘤	瘼	癘	癈	癆	癡	癢	癨	癩	癪	癧	癬	癲	
	E19E		癶														
癶	E19E			癶	癸	發											
白	E19E						皂	皃	皈	皋	皎	皖	皓	皙	皚		
皮	E19E															皰	皺
	E1AE	皹	皹	皺													
皿	E1AE				盂	盍	盖	盒	蓋	盡	盥	盧	盪	蘯			
目	E1AE														眇	眈	眇
	E1BE	眄	眩	眤	眞	眥	眦	眛	眷	眸	睇	睚	睨	睫	睛	睥	睿

	Shift JIS	0	1	2	3	4	5	6	7	8	9	A	B	C	D	E	F
目	E1CE	睾	睹	睦	瞋	瞑	瞠	瞞	瞰	瞶	瞹	瞿	瞼	瞽	瞻	矇	矍
	E1DE	矗	矚														
矛	E1DE			矜													
矢	E1DE				矣	矮											
石	E1DE						矼	砌	砒	礦	砠	礪	硅	碎	硴	碆	硼
	E1EE	碚	碌	碣	碵	碪	碯	磑	磧	磋	磔	碾	碼	磅	磊	磬	
	E23F		磧	磚	磽	磴	礇	礒	礑	礙	礬	礫					
示	E23F												祀	祠	祇	祟	祚
	E24F	祕	祓	祺	祿	禊	禝	禧	齋	禪	禮	禳					
禺	E24F												禹	禺			
禾	E24F														秉	秕	秧
	E25F	秬	秡	秣	稈	稍	稘	稙	稠	稟	禀	稱	稻	稾	稷	穃	穗
	E26F	穉	穡	穢	穩	龝	穰										
穴	E26F							穹	穿	窈	窗	窕	窘	窖	窩	竈	窰
	E280	窶	竅	竄	窿	邃	竇	竊									
立	E280								竝	竏	竚	竓	站	竚	竝	竡	竢
	E290	竦	竭	端													
竹	E290				笂	笏	笊	笆	笳	笘	笙	笞	笵	笨	笶	筐	
	E29E		筐	笄	筍	笋	筌	笘	筵	筥	筴	筧	筰	筱	筑	筮	箝
	E2AE	箘	箟	箍	箜	箚	箋	箒	箏	箏	筬	篋	篁	篌	篏	箴	篆
	E2BE	篝	篩	簑	簔	篦	篥	籠	簀	簇	簓	篳	篷	簗	簍	篶	簡
	E2CE	簧	簪	簟	簷	簫	簽	籌	籃	籔	簇	籠	籐	籟	籟	籤	籖
	E2DE	籌	籬														
米	E2DE			籵	粃	粐	粤	粭	粲	粫	粡	粨	粳	粲	粱	粮	粹
	E2EE	粽	糀	糅	糂	糘	糒	糜	糢	鬻	糯	糲	糴	糶			
糸	E2EE														糺	紆	
	E33F		紂	紜	紕	紊	絅	紘	紮	絆	紿	紵	絆	絳	絖	絎	絲
	E34F	絨	絮	絏	絣	經	綉	條	綏	絽	綛	綺	綮	綣	綵	緇	綽
	E35F	綫	總	綢	綯	緜	綸	綟	綰	緘	緝	緤	緞	緻	緲	緡	縅
	E36F	縋	縣	縡	縒	縱	縟	縉	縋	縢	繆	繦	縻	縵	縹	繃	縷
	E380	縲	縺	繧	繝	繖	繞	繙	繚	繹	繪	繩	繼	繻	纜	缶	缺
	E390	罅	罐	罌	罍	罎	罐	罐	罌	罐	罐	罐	罐	罐			
缶	E390														缸	缺	
	E39E		罅	罌	罍	罎	罐										

	Shift JIS	0	1	2	3	4	5	6	7	8	9	A	B	C	D	E	F
网	E39E							网	罕	罔	罘	罟	罠	罨	罩	罪	罰
	E3AE	羂	羆	羃	羈	羇											
羊	E3AE						羌	羔	羞	羝	羚	羣	羯	羲	羹	羮	羶
	E3BE	羸	譱														
羽	E3BE			翅	翠	翊	翕	翔	翡	翦	翩	翳	翹	飜			
老	E3BE														耆	耄	耋
耒	E3CE	耒	耘	耙	耜	耡	耨										
耳	E3CE							耿	耻	聊	聆	聒	聘	聚	聟	聢	聯
	E3DE	聾	聲	聰	聶	聹	聽										
聿	E3DE							聿	肄	肆	肅						
肉	E3DE											肛	肓	肚	肭	冐	肬
	E3EE	胛	胥	胙	胝	胄	胚	胖	脉	胯	胱	脛	脩	脣	脯	腋	
	E43F		隋	腆	脾	腓	腑	胼	腱	腮	腥	腦	腴	膃	膈	膊	膀
	E44F	膂	膠	膕	膣	腟	膣	膕	膩	膰	膵	膾	膸	膽	臀	臂	膺
	E45F	臉	臍	臑	臙	臘	臈	臚	臟	臠							
臣	E45F										臧						
至	E45F											臺	臻				
臼	E45F													與	舁	舂	舅
	E46F	與	舊														
舌	E46F			舍	舐	舗											
舟	E46F						舩	舫	舸	舳	艀	艙	艘	艝	艚	艟	艤
	E480	艢	艨	艪	艫	舮											
艮	E480						艱										
色	E480							艷									
艸	E480								艸	艾	芍	芒	芫	芟	芻	芬	苡
	E490	苣	苟	苒	苴	苳	苺	莓	范	苻	苹	苞	茆	苜	茉	苙	
	E49E		茵	茴	茖	茲	茱	荀	茹	荐	荅	茯	茫	茗	茘	莅	莚
	E4AE	莪	莟	莢	莖	茣	莎	莇	莊	荼	莵	荳	荵	莠	莉	莨	菴
	E4BE	萓	菫	菎	菽	萃	菘	萋	菁	菷	萇	菠	菲	萍	萢	萠	莽
	E4CE	萸	蔆	菻	葭	萪	萼	蕚	蒄	葷	葫	蒭	葮	蒂	葩	葆	萬
	E4DE	葯	葹	萵	蓊	葢	蒹	蒿	蒟	蓙	蓍	蒻	蓚	蓐	蓁	蓆	蓖
	E4EE	蒙	蔡	蓿	蔣	蔗	蔘	蔬	蔟	蔕	蔔	蓼	蕀	蕣	蕘	蕈	
	E53F		蕁	蘂	蕋	蕕	薀	薤	薈	薑	薊	薨	蕭	薔	薛	藪	薇
	E54F	薄	蒲	蕾	藻	藉	薺	藏	薹	藐	藕	藝	藥	藜	藹	蘊	蘓

	Shift JIS	0	1	2	3	4	5	6	7	8	9	A	B	C	D	E	F
艸	E55F	蘋	蘋	藺	蘆	蘢	蘇	蘰	蘿								
虍	E55F									虍	乕	虔	號	虧			
虫	E55F														虱	蚓	蚣
	E56F	蚩	蚪	蚋	蚌	蚶	蚯	蛄	蛆	蚰	蛉	蠣	蚫	蛔	蛞	蛩	蛬
	E580	蛟	蛛	蛯	蜒	蜆	蜈	蜀	蜃	蛻	蜑	蜉	蜍	蛹	蜊	蜴	蜿
	E590	蜷	蜻	蜥	蜩	蜚	蝠	蝟	蝸	蝌	蝎	蝴	蝗	蝨	蝮	蝙	
	E59E		蝓	蝣	蝪	蠅	螢	螟	螂	螯	蟋	螽	蟀	蟐	雖	螫	蟄
	E5AE	螳	蟇	蟆	螻	蟯	蟲	蟠	蠏	蠍	蟾	螺	蟶	蟒	蟒	蠑	蠖
	E5BE	蠕	蠢	蠡	蠱	蠶	蠹	蠧	蠻								
血	E5BE									衄	衂						
行	E5BE											衒	衙	衞	衢		
衣	E5BE															衫	袁
	E5CE	衾	袞	衵	衽	袵	衲	袂	袗	袒	袮	袙	袢	袍	袤	袰	袿
	E5DE	袱	裃	裄	裔	裘	裙	裝	裹	褂	裼	裝	裨	裏	裏	裏	裏
	E5EE	裏	裏	裏	裏	裏	裏	裏	裏	裏	裏	裏	裏	裏	裏	裏	
	E63F		裏	裏	裏	裏	裏	裏	裏								
襾	E63F									襾	覃	覈	覊				
見	E63F													覓	覘	覡	覩
	E64F	覦	覬	覯	覲	覺	覽	覧	觀								
角	E64F									觚	觜	觝	解	觸	觸		
言	E64F															訃	訖
	E65F	訐	訌	訛	訝	訥	訶	詁	詛	詒	詆	詈	詼	詭	詬	詢	誅
	E66F	誂	誅	誨	誡	誑	誥	誦	誚	誣	諄	諍	諂	諚	諫	諳	諧
	E680	諤	諱	謔	諠	諢	諷	諞	諛	謂	謇	謚	謐	謗	謐	謗	謠
	E690	謳	鞫	謦	謫	謾	謨	譁	譌	譏	譎	證	譖	譜	譜	譚	譫
	E69E		譟	譬	譯	譴	譽	讀	讌	讎	讒	讓	讖	讙	讚		
谷	E69E															谺	豁
	E6AE	豁															
豆	E6AE		豈	豌	豎	豐											
豕	E6AE						豕	豪	豬								
豸	E6AE									豸	豺	貂	貉	貅	貊	貍	貌
	E6BE	貔	貔	貘													
貝	E6BE				賊	賃	貪	貽	貲	貳	貳	貶	賈	賈	賤	賣	賓
	E6CE	賽	賺	賻	贄	贅	贊	贈	贏	贐	贔	贖	贓	贓	贔	贖	

	Shift JIS	0	1	2	3	4	5	6	7	8	9	A	B	C	D	E	F
赤	E6CE																赧
	E6DE	赭															
走	E6DE		赱	赳	趁	趙											
足	E6DE						跂	趾	趺	跏	跚	跖	跌	跛	跋	跪	跫
	E6EE	跟	跣	跼	跽	踉	跿	踝	踞	踐	踟	蹂	踵	踰	踴	蹊	
	E73F		蹇	蹉	蹌	蹐	蹈	蹙	蹤	蹠	踪	蹣	蹕	蹶	蹲	蹼	躁
	E74F	躇	躅	躄	躋	躊	躓	躑	躔	躙	躪	躡					
身	E74F												躬	躰	體	躾	軀
	E75F	躯	軈														
車	E75F			軋	軛	軣	軼	軻	軫	軾	較	輅	輕	輒	輙	輓	輜
	E76F	輟	輌	輌	輦	輳	輻	輹	轅	轂	輾	轌	轉	轆	轎	轗	轜
	E780	轢	轣	轤													
辛	E780				辜	辟	辣	辭	辯								
辷	E780									辷	迚	迥	迢	迪	迯	邇	迴
	E790	逅	迹	迺	逑	逕	逡	逍	逞	逖	逋	逧	逶	逵	逹	迸	
	E79E		遇	遐	遑	遒	逎	遉	逾	遠	遘	遞	遨	遯	遶	隨	遲
	E7AE	邂	遽	邁	遨	邊	邉	邏									
邑	E7AE								邨	邯	邱	邵	郢	郤	扈	郛	鄂
	E7BE	鄭	鄙	鄲	鄰												
酉	E7BE					酊	酖	酘	酣	酥	酩	酳	酲	醋	醉	醂	醢
	E7CE	醫	醯	醪	醵	醴	醺	釀	釁								
采	E7CE									釉	釋						
里	E7CE											釐					
金	E7CE												釖	釟	釜	釛	釼
	E7DE	釵	釶	鈞	釿	鈔	鈬	鈕	鈑	鉞	鉗	鉅	鉉	鉤	鉈	銕	鈿
	E7EE	鉋	鉐	銜	銖	銓	銛	鉚	鋏	銹	銷	鍁	鋐	鋺	鋶	鋼	
	E83F		錙	錢	錚	錣	錺	錵	錻	鍜	鍠	鍼	鍮	鍖	鎰	鍋	鎬
	E84F	鎔	鎧	鏖	鏗	鏨	鏥	鏘	鏃	鏝	鏐	鏈	鏤	鐚	鐔	鐓	鐃
	E85F	鐇	鐐	鐶	鐫	鐵	鐡	鐺	鑁	鑒	鑄	鑛	鑠	鑢	鑞	鑪	鈩
	E86F	鑰	鑵	鑷	鑽	鑚	鑼	鑾	钁	鑿							
門	E86F										閂	閇	閊	閔	閖	閘	閙
	E880	閏	閨	閧	閣	閖	閻	閹	閼	閾	濶	關	閻	闌	闕	闔	闖
	E890	關	闃	闥	闢												
阜	E890					阡	阨	阮	阯	陂	陌	陏	陋	陷	陜	陞	

	Shift JIS	0	1	2	3	4	5	6	7	8	9	A	B	C	D	E	F
阜	E89E		陜	陟	陦	陲	陬	隍	隘	隕	隗	險	隧	隱	隲	隰	隴
隶	E8AE	隶	隷														
隹	E8AE			隹	雎	雋	雉	雍	襍	雜	霍	雕					
雨	E8AE												雹	雰	雷	雲	雹
	E8BE	霎	霑	霏	霖	霙	霤	霧	霰	露	霹	霾	霸	霽	靈	靈	靉
青	E8CE	靜															
非	E8CE		靠														
面	E8CE			靤	靦	靨											
革	E8CE						勒	靫	靭	靹	鞅	靼	鞁	靺	鞆	鞋	鞏
	E8DE	鞐	鞜	鞨	鞦	鞣	鞳	鞴	韃	韆	鞭						
韋	E8DE											韋	韜				
韭	E8DE													韭	音	韲	
音	E8DE																竟
	E8EE	韶	韻														
頁	E8EE			頏	頌	頸	頤	頡	頷	頽	顆	顏	顋	顫	顯	顰	
	E93F		顱	顳	顯												
風	E93F					颪	颯	颱	颶	飄	飃	飆					
食	E93F												飩	飫	餃	餉	餒
	E94F	餔	餘	餡	餝	餞	餤	餠	餬	餮	餽	餾	饂	饉	饅	饐	饋
	E95F	饑	饒	饌	饑												
首	E95F					馗	馘										
香	E95F							馥									
馬	E95F								馭	馮	馼	駟	駛	駝	駘	駑	駭
	E96F	駮	駱	駲	駻	駸	騁	騏	騅	駢	騙	騫	騷	驅	驂	驀	驃
	E980	騾	驕	驍	驛	驗	驟	驢	驥	驤	驩	驫	驪				
骨	E980													骭	骰	骼	髀
	E990	髏	髑	髓	體												
高	E990					髞											
髟	E990						髟	髱	髣	髴	髫	髻	髮	髯	髱	髷	
	E99E		髻	鬆	鬘	鬚	鬢	鬢	鬣								
鬥	E99E									鬥	鬧	鬨	鬩	鬪	鬮		
鬯	E99E															鬯	
鬲	E99E																鬲
鬼	E9AE	魄	魃	魏	魍	魎	魑	魘									

	Shift JIS	0	1	2	3	4	5	6	7	8	9	A	B	C	D	E	F
魚	E9AE								魴	鮓	鮃	鮑	鮖	鮗	鮟	鮠	鮨
	E9BE	鮴	鯀	鯊	鮹	鯆	鯏	鯑	鯒	鯣	鯢	鯤	鯔	鯡	鰺	鯲	鯱
	E9CE	鯰	鰕	鰔	鰉	鰓	鰌	鰐	鰏	鰒	鰕	鰔	鰛	鰙	鰝	鰤	鰡
	E9DE	鰰	鱇	鰳	鰾	鱁	鱈	鱉	鱔	鱗	鱸						
鳥	E9DE											鳬	鳧	鳩	鳩	鳳	
	E9EE	鳳	鴃	鴆	鴛	鴛	鴻	鴟	鴦	鴕	鴒	鴛	鴿	鴾	鵆	鵈	
	EA3F		鵝	鵞	鵠	鵠	鵡	鵲	鵲	鶉	鶇	鶫	鵯	鵺	鶉	鶇	鶯
	EA4F	鶲	鶏	鶏	鶻	鶲	鶻	鶸	鶸	鶴	鶯	鶯	鶴	鶴	鶴	鶴	鶯
	EA5F	鸚	鸛	鸞													
鹵	EA5F				鹵	鹹	鹽										
鹿	EA5F							麁	麈	麤	麌	麒	麕	麑	麒		
麥	EA5F															麥	麩
	EA6F	麸	麪	麭													
麻	EA6F				黹												
黄	EA6F					黌											
黍	EA6F						黎	黏	黐								
黒	EA6F									黔	黜	點	黝	黠	黥	黨	黯
	EA80	黴	黶	黷													
鼎	EA80				鼎	鼏	鼐										
鼓	EA80							鼗	鼓	鼠							
鼓	EA80										鼓	鼕					
鼠	EA80												鼡	鼬			
鼻	EA80														鼾		
齊	EA80															齊	
齒	EA80																齒
	EA90	齔	齣	齟	齠	齡	齦	齧	齬	齪	齷	齲	齶				
龍	EA90													龕			
龜	EA90														龜		
龠	EA90															龠	

[ESC+2D50] DataMatrix (ECC200)

Hexadecimal code	ESC	2D50	Parameter
	<1B>$_{16}$	<32>$_{16}$<44>$_{16}$ <35>$_{16}$ <30>$_{16}$	,aa,bb,ccc,ddd
Initial value	None		

Valid range and term of command	When the power is OFF	The set parameter is not maintained.
	Valid range within items	The set parameter becomes invalid.
	Valid range between items	The set parameter becomes invalid.

[Function]

Specifying DataMatrix Code (ECC200).

[Format] (Setup part)

<2D50>,aa,bb,ccc,ddd

- Parameter

  a [Horizontal cell size] = Valid Range : 01 to 99 dots
  b [Vertical cell size] = Valid Range : 01 to 99 dots
  c [Number of cell in one line]
  Valid Range : 010 to 144
  000 : (Auto-setting)
  d [Number of cell lines]
  Valid Range : 008 to 144
  000 : (Auto-setting)

[Format] (Data part)

<DN>mmmm,n...n

- Parameter

  m [Number of data] = Valid Range : 1 to 3116
  n [Print data] = Data
  * When print 7EH, specify "7EH, 7EH."
  * If Parameter other than above is specified or print data does not match, printing is not performed.

[Coding Example]

Horizontal cell size: 3 dots, Vertical cell size: 3 dots

<A>
<V>100<H>200**<2D50>,03,03,000,000**
<DN>0010,0123456789
<Z>

[Supplementary Explanation]

- If the parameter other than the description is specified or number of print data does not match, printing is not performed.
- When specifying print format, secure more than 2 mm blank space in four sides of the DataMatrix for read margin for the scanner.
- When print data is 7EH, specify "7EH, 7EH." Number of data will be "0002."
- When Auto setup (000) is applied for [Number of cell in one row] and [Number of cell lines], square DataMatrix is printed.
- The number of addressable data at data part is depending on data format. Following chart shows the number of addressable data (When the number of cell is set automatically or the maximum number of cell is specified).

	Data format	Number of data
Data format	Numeric	3116
	Alphanumeric	2335
	Binary (00H to FFH)	1556

- The symbol may not be read by a scanner when the cell size is smaller. In the above case, specify enough cell size for the scanner.

* Symbol size of DataMatrix (ECC200) is following 30 types.

Symbol size and number of data of DataMatrix (ECC200)

	Symbol size			Maximum data digits		
	Number of cell in one line(c)	Number of cell line(d)	Number of block	Numeric	Alphanumeric	Binary
Square	10	10	1	6	3	1
	12	12	1	10	6	3
	14	14	1	16	10	6
	16	16	1	24	16	10
	18	18	1	36	25	16
	20	20	1	44	31	20
	22	22	1	60	43	28
	24	24	1	72	52	34
	26	26	1	88	64	42
	32	32	4	124	91	60
	36	36	4	172	127	84
	40	40	4	228	169	112
	44	44	4	288	214	142
	48	48	4	348	259	172
	52	52	4	408	304	202
	64	64	16	560	418	278
	72	72	16	736	550	366
	80	80	16	912	682	454
	88	88	16	1152	862	574
	96	96	16	1392	1042	694
	104	104	16	1632	1222	814
	120	120	36	2100	1573	1048
	132	132	36	2608	1954	1302
	144	144	36	3116	2335	1556
Rectangle	18	8	1	10	6	3
	32	8	2	20	13	8
	26	12	1	32	22	14
	36	12	2	44	31	20
	36	16	2	64	46	30
	48	16	2	98	72	47

* Mixture of Numeric, Alphanumeric and Control code varies according to number of characters.

DataMatrix Code table

							S			I						S			O	
				B8	0	0	0	0	0	0	0	0	1	1	1	1	1	1	1	1
				B7	0	0	0	0	1	1	1	1	0	0	0	0	1	1	1	1
				B6	0	0	1	1	0	0	1	1	0	0	1	1	0	0	1	1
				B5	0	1	0	1	0	1	0	1	0	1	0	1	0	1	0	1
B4	**B3**	**B2**	**B1**		**0**	**1**	**2**	**3**	**4**	**5**	**6**	**7**	**8**	**9**	**A**	**B**	**C**	**D**	**E**	**F**
0	0	0	0	**0**			SP	0	@	P	`	p								
0	0	0	1	**1**			!	1	A	Q	a	q								
0	0	1	0	**2**			”	2	B	R	b	r								
0	0	1	1	**3**			#	3	C	S	c	s								
0	1	0	0	**4**			$	4	D	T	d	t								
0	1	0	1	**5**			%	5	E	U	e	u								
0	1	1	0	**6**			&	6	F	V	f	v								
0	1	1	1	**7**			’	7	G	W	g	w								
1	0	0	0	**8**			(	8	H	X	h	x								
1	0	0	1	**9**			)	9	I	Y	i	y								
1	0	1	0	**A**			*	:	J	Z	j	z								
1	0	1	1	**B**			+	;	K	[	k	{								
1	1	0	0	**C**			,	<	L	\	l	|								
1	1	0	1	**D**			-	=	M	]	m	}								
1	1	1	0	**E**			.	>	N	^	n	~								
1	1	1	1	**F**			/	?	O	__	o	DEL								

[00H to FFH] can be available for DataMatrix.

When print 7EH, specify "7EH, 7EH."

[ESC+2D51] GS1 DataMatrix

Hexadecimal code	ESC	2D51	Parameter
	<1B>$_{16}$	<32>$_{16}$<44>$_{16}$ <35>$_{16}$ <31>$_{16}$	,aa,bb,ccc,ddd
Initial value	None		

Valid range and term of command	When the power is OFF	The set parameter is not maintained.
	Valid range within items	The set parameter becomes invalid.
	Valid range between items	The set parameter becomes invalid.

[Function]

Specifying GS1 DataMatrix Code.

[Format] (Setup part)

<2D51>,aa,bb,ccc,ddd

- Parameter

  a [Horizontal cell size] = Valid Range : 01 to 99 dots
  b [Vertical cell size] = Valid Range : 01 to 99 dots
  c [Number of cell in one line]
  Valid Range : 010 to 144
  000 : (Auto-setting)
  d [Number of cell lines]
  Valid Range : 008 to 144
  000 : (Auto-setting)

[Format] (Data part)

<DN>mmmm,n...n

- Parameter

  m [Number of data] = Valid Range : 1 to 3116
  n [Print data] = Data
  * When print 7EH, specify "7EH, 7EH."
  * When print 1BH, specify "1BH, 1BH."
  * When print FNC1, specify “1BH, 31H.”
  * If Parameter other than above is specified or print data do not match, print is not secured.

[Coding Example]

Horizontal cell size: 3 dots, Vertical cell size: 3 dots

<A>
<V>100<H>200**<2D51>,03,03,000,000**
<DN>0014, <1B>$_{16}$1100123456789
<Q>2
<Z>

* <1B>$_{16}$ specifies character code "1BH.”

[Supplementary Explanation]

- If Parameter other than above is specified or print data do not match, printing is not performed.
- When specifying print format, secure more than 2 mm blank space in four sides of the DataMatrix for read margin for the scanner.
- When print data is 7EH, specify "7EH, 7EH." Number of data will be "0002."
- When [7EH] is specified solely, the command error occurs and the code will not be printed.
- When print data is 1BH, specify "1BH, 1BH." Number of data will be "0002."
- When print data is FNC1, specify "1BH, 31H." Number of data will be "0002."
- When [1BH] is specified solely, printing and the content of printing will not be guaranteed.
- When Auto setup (000) is applied for "Number of cell in one row” and "Number of cell lines," square symbol is printed.
- When the same value other than 000 is specified (manual setting) in the "number of cell in one row" and "number of cell lines," square symbol will be printed.
- When different value other than 000 is specified (manual setting) in the "number of cell in one row" and "number of cell lines," rectangle DataMatrix will be printed.
- The number of addressable data at data part is depending on data format. Available data number is as follows.

  (Number of cell is auto setting or the maximum cell number is specified):

	Data format	Number of data
Data format	Numeric	3116
	Alphanumeric	2335
	Binary (00H to FFH)	1556

- The symbol may not be read by a scanner when the cell size is smaller. In the above case, specify enough cell size for the scanner.
- The symbol size available in the GS1 DataMatrix is limited to the 30 types in the below table. Also, the maximum number of data is limited depending on the symbol size. Refer to the "The maximum digit of the number of data" table.
- Make sure to specify 1BH and 31H at the beginning of the data.

* The symbol size of DataMatrix(ECC200) is fixed to the following 30 types.

Symbol size and number of data of GS1 DataMatrix

	Symbol size			Maximum data digits		
	Number of cell in one line(c)	Number of cell line(d)	Number of block	Numeric	Alphanumeric	Binary
Square	10	10	1	6	3	1
	12	12	1	10	6	3
	14	14	1	16	10	6
	16	16	1	24	16	10
	18	18	1	36	25	16
	20	20	1	44	31	20
	22	22	1	60	43	28
	24	24	1	72	52	34
	26	26	1	88	64	42
	32	32	4	124	91	60
	36	36	4	172	127	84
	40	40	4	228	169	112
	44	44	4	288	214	142
	48	48	4	348	259	172
	52	52	4	408	304	202
	64	64	16	560	418	278
	72	72	16	736	550	366
	80	80	16	912	682	454
	88	88	16	1152	862	574
	96	96	16	1392	1042	694
	104	104	16	1632	1222	814
	120	120	36	2100	1573	1048
	132	132	36	2608	1954	1302
	144	144	36	3116	2335	1556
Rectangle	18	8	1	10	6	3
	32	8	2	20	13	8
	26	12	1	32	22	14
	36	12	2	44	31	20
	36	16	2	64	46	30
	48	16	2	98	72	47

* Mixture of Numeric, Alphanumeric and Control code varies according to number of characters.

GS1 DataMatrix Code table

					S				I				S				O			
				B8	0	0	0	0	0	0	0	0	1	1	1	1	1	1	1	1
				B7	0	0	0	0	1	1	1	1	0	0	0	0	1	1	1	1
				B6	0	0	1	1	0	0	1	1	0	0	1	1	0	0	1	1
				B5	0	1	0	1	0	1	0	1	0	1	0	1	0	1	0	1
B4	**B3**	**B2**	**B1**		**0**	**1**	**2**	**3**	**4**	**5**	**6**	**7**	**8**	**9**	**A**	**B**	**C**	**D**	**E**	**F**
0	0	0	0	**0**			SP	0	@	P	`	p								
0	0	0	1	**1**			!	1	A	Q	a	q								
0	0	1	0	**2**			"	2	B	R	b	r								
0	0	1	1	**3**			#	3	C	S	c	s								
0	1	0	0	**4**			$	4	D	T	d	t								
0	1	0	1	**5**			%	5	E	U	e	u								
0	1	1	0	**6**			&	6	F	V	f	v								
0	1	1	1	**7**			'	7	G	W	g	w								
1	0	0	0	**8**			(	8	H	X	h	x								
1	0	0	1	**9**			)	9	I	Y	i	y								
1	0	1	0	**A**			*	:	J	Z	j	z								
1	0	1	1	**B**			+	;	K	[	k	{								
1	1	0	0	**C**			,	<	L	\	l	|								
1	1	0	1	**D**			-	=	M	]	m	}								
1	1	1	0	**E**			.	>	N	^	n	~								
1	1	1	1	**F**			/	?	O	_	o	DEL								

	Data n	**Data n+1**
FNC1	1BH	31H

GS1 DataMatrix can specify from 00H to FFH.

When print 7EH, specify "7EH, 7EH."

When print 1BH, specify "1BH, 1BH."

When specifying FNC1, specify “1BH, 31H.”

[ESC+2D70] Aztec Code

Hexadecimal code	ESC	2D70	Parameter
	$<1B>_{16}$	$<32>_{16}<44>_{16}$ $<37>_{16}$ $<30>_{16}$	,a,bb,cc,dd,e,f...f
Initial value [aa]	None		

Valid range and term of command	When the power is OFF	The set parameter is not maintained.
	Valid range within items	The set parameter becomes invalid.
	Valid range between items	The set parameter becomes invalid.

[Function]

Specifying Aztec Code.

[Format] (Setup part)

<2D70>,a,bb,cc,dd,e,f...f

- Parameter

a [Symbol Type]
0 : Full Range Symbol
1 : Compact Symbol

b [ECC Percentage]
0 : Default error correction level
01 to 99 : Error correction percentage

c [Symbol Size]
0 : Automatic minimization
1 to 4 : 1 to 4 – layer (Compact Symbol) * Following symbol size table reference.
4 to 32 : 4 to 32 – layer (Full Range Symbol) * Following symbol size table reference.

d [Number of symbols for structured append]
0 : Encodes without append
1 : Automatic Setting
2 to 26 : Append structured blocks

e [Message ID]
Y : Specify Message ID for structured bound symbol
N : No Message ID

f [Message ID for structured bound symbol]
Printable ASCII string (0x21 to 0x7E) with maximum 24 bytes.

[Format] (Data part)

<DS>n..n // for ASCII data

<DN>mmmm,n..n // for Binary data

- Parameter

m [Number of Data] = 0001 to 1914
- Set this parameter when Print data is in Binary.

n [Print data] = Data
- When selecting [1BH], make sure to specify [1BH,1BH].
- When selecting [FNC1], make sure to specify [1BH,30H].
- When selecting [ECI], make sure to specify [1BH,*]. ('*' refers from 31H to 36H.)

[Coding Example]

Symbol Type: Compact, ECC Percentage: Default, Symbol Size: 2 layer, Structured Append: Without append, Message ID: No, Message ID for structured bound symbol: None, Barcode Data: THIS IS TEST.

<A>
<V>0100<H>0100<L>0404
<2D70>,1,0,2,0,N,<DS>THIS IS TEST
<Q>1
<Z>

- Generated Label

[Supplementary Explanation]

- When parameters other than the description are specified, symbol may not print.
- When the size of the Aztec code is small, the symbol might not be able to read according to the performance of the scanner. In that case, please magnify the size of the symbol to make it large enough by using <L> command maintaining the same ratio of magnification for both length and width.
- The smallest symbol size is 15x15 modules and largest is 151x151 modules. Available Aztec code formats and its maximum capacity are as follows:

  Symbol size table

Parameter c	Format	Digit	Text	Binary data
1	15x15 Compact	13	12	6
2	19x19 Compact	40	33	19
3	23x23 Compact	70	57	33
4	27x27 Compact	110	89	53
4	31x31	128	104	62
5	37x37	178	144	87
6	41x41	232	187	114
7	45x45	294	236	145
8	49x49	362	291	179
9	53x53	433	348	214
10	57x57	516	414	256
11	61x61	601	482	298
12	67x67	691	554	343
13	71x71	793	636	394
14	75x75	896	718	446
15	79x79	1008	808	502
16	83x83	1123	900	559
17	87x87	1246	998	621
18	91x91	1378	1104	687
19	95x95	1511	1210	753
20	101x101	1653	1324	824

Parameter c	Format	Digit	Text	Binary data
21	105x105	1801	1442	898
22	109x109	1956	1566	976
23	113x113	2116	1694	1056
24	117x117	2281	1826	1138
25	121x121	2452	1963	1224
26	125x125	2632	2107	1314
27	131x131	2818	2256	1407
28	135x135	3007	2407	1501
29	139x139	3205	2565	1600
30	143x143	3409	2728	1702
31	147x147	3616	2894	1806
32	151x151	3832	3067	1914

- Aztec code is settable within the range (00H – FFH). For Binary data, user needs to set the data number properly by using the <DN> command. If Data number and Print data does not match, symbol will not print properly.
- When print data is 1BH, specify [1BH, 1BH]. Number of data will be "0002."
- Use [1BH,*] in pairs within input data when presenting ECI. '*' refers from 31H to 36H. The number in the following FLG(1) - FLG(6) are the number of digits of the data to be used for ECI.

  <ESC>1→FLG(1): The number of digits specified for ECI data is 1 digits.
  <ESC>2→FLG(2): The number of digits specified for ECI data is 2 digits.
  <ESC>3→FLG(3): The number of digits specified for ECI data is 3 digits.
  <ESC>4→FLG(4): The number of digits specified for ECI data is 4 digits.
  <ESC>5→FLG(5): The number of digits specified for ECI data is 5 digits.
  <ESC>6→FLG(6): The number of digits specified for ECI data is 6 digits.

  e.g.)A sample data with <ESC>4 : <ESC>41111ABCDE
  The scanned data when <ESC>4 will be "\001111ABCDE" ('\' may differ depending on scanner settings).
  1) <ESC>4 means FLG(4). The succeeding "1111"(4 digits) will be treated as ECI data.
  2) Since it is short by 2 digits, 0 is padded in the beginning to make it "\001111."
- The message ID is enabled only when it is separated to print after automatic setting with "Number of symbols for structured append" with specifying "Append structured blocks."

Aztec Code Table

					S				I				S				O			
				b8	0	0	0	0	0	0	0	0	1	1	1	1	1	1	1	1
				b7	0	0	0	0	1	1	1	1	0	0	0	0	1	1	1	1
				b6	0	0	1	1	0	0	1	1	0	0	1	1	0	0	1	1
				b5	0	1	0	1	0	1	0	1	0	1	0	1	0	1	0	1
B4	b3	b2	b1		0	1	2	3	4	5	6	7	8	9	A	B	C	D	E	F
0	0	0	0	0			SP	0	@	P	`	p								
0	0	0	1	1			!	1	A	Q	a	q								
0	0	1	0	2			”	2	B	R	b	r								
0	0	1	1	3			#	3	C	S	c	s								
0	1	0	0	4			$	4	D	T	d	t								
0	1	0	1	5			%	5	E	U	e	u								
0	1	1	0	6			&	6	F	V	f	v								
0	1	1	1	7			’	7	G	W	g	w								
1	0	0	0	8			(	8	H	X	h	x								
1	0	0	1	9			)	9	I	Y	i	y								
1	0	1	0	A			*	:	J	Z	j	z								
1	0	1	1	B			+	;	K	[	k	{								
1	1	0	0	C			,	<	L	＼	l	¦								
1	1	0	1	D			−	=	M	]	m	}								
1	1	1	0	E			.	>	N	^	n	~								
1	1	1	1	F			/	?	O	_	o	DEL								

	Data n	Data n+1
FNC1	1BH	30H
ECI	1BH	31H to 36H

[00H to FFH] can be available for Aztec Code.

When specifying 1BH, specify “1BH, 1BH.”

When specifying FNC1, specify “1BH, 30H.”

When specifying ECI, specify “1BH,*.” (‘*’ refers from 31H to 36H.)

[ESC+BQ] QR Code (Compatible command)

Hexadecimal code	ESC	BQ	Parameter
	<1B>$_{16}$	<42>$_{16}$<51>$_{16}$	Manual setup: abcc,(ddeeff,)g(hhhh)n Auto setup: abcc,(ddeeff,)gn
Initial value	None		

Valid range and term of command	When the power is OFF	The set parameter is not maintained.
	Valid range within items	The set parameter becomes invalid.
	Valid range between items	The set parameter becomes invalid.

[Function]

Specifying 2D code QR code.

[Format] (Setup part)

Manual setup: <BQ>abcc,(ddeeff,)g(hhhh)n

Auto setup: <BQ>abcc,(ddeeff,)0n

- Parameter

a [Error correction level]
1 : 7% High density level (L)
2 : 15% Standard level (M)
3 : 30% High reliability level (H)
4 : 15% reliability level (Q)

b [Concatenation mode]
0 : Normal mode
1 : Concatenation mode

c [Size of one side of cell]
Valid Range : 01 to 99 (dot)
e.g.) cc=04

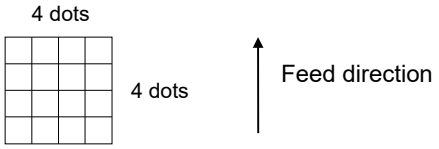

d [Number of partitions by concatenation mode]
Valid range : 01 to 16

e [Sequential number partitioned by concatenation mode]
Valid range : 01 to 16

f [Concatenation mode parity data]
Valid range : 00 to FF

g [Character mode]
0 : Auto setup mode
1 : Number mode
2 : Alphanumeric mode
3 : Binary mode
4 : Kanji mode

h [Number of data]
Valid range : 0001 to 1167 (digits)

n [Print data] = Data

[Coding Example]

Error correction level: 30%, Concatenation mode: Normal, Size of one side of cell: 10

<A>
<V>100<H>200**<BQ>3010,112345**
<Q>2
<Z>

[Supplementary Explanation]

- Carry out XOR logic operation of all the partitioned print data of the QR code and then, specify this operation data in hexadecimal character. This is what we call [Parity data].
- When character mode is set to other than binary mode, it is not necessary to set data number parameter.

[Precautions during use]

- This is the command of the old specification. Recommend the use of <2D31>.

QR Code data size list (Model 1)

Version	Error Correction	Numeric	Alpha-numeric	Kanji	Binary
1	L	40	24	10	17
	M	33	20	8	14
21×21	Q	25	15	6	11
	H	16	10	4	7
2	L	81	49	20	34
	M	66	40	17	28
25×25	Q	52	31	13	22
	H	33	20	8	14
3	L	131	79	33	55
	M	100	60	25	42
29×29	Q	81	49	20	34
	H	52	31	13	22
4	L	186	113	48	78
	M	138	84	35	58
33×33	Q	114	69	29	48
	H	76	46	19	32
5	L	253	154	65	106
	M	191	116	49	80
37×37	Q	157	95	40	66
	H	105	63	27	44
6	L	321	194	82	134
	M	249	151	64	104
41×41	Q	201	122	51	84
	H	133	81	34	56
7	L	402	244	103	168
	M	311	188	80	130
45×45	Q	253	154	65	106
	H	167	101	43	70
8	L	493	299	126	206
	M	378	229	97	158
49×49	Q	301	183	77	126
	H	203	123	52	85

Version	Error Correction	Numeric	Alpha-numeric	Kanji	Binary
9	L	585	354	150	244
	M	441	267	113	184
53×53	Q	369	223	94	154
	H	239	145	61	100
10	L	690	418	177	287
	M	526	319	135	219
57×57	Q	433	262	111	180
	H	291	176	74	121
11	L	800	485	205	333
	M	608	368	156	253
61×61	Q	493	299	126	205
	H	342	207	87	142
12	L	915	555	234	381
	M	694	421	178	289
65×65	Q	579	351	148	241
	H	390	236	100	162
13	L	1030	624	264	429
	M	790	479	202	329
69×69	Q	656	398	168	273
	H	454	275	116	189
14	L	1167	707	299	486
	M	877	531	225	365
73×73	Q	738	447	189	307
	H	498	302	127	207

QR Code (Numeric mode) Code table

					S				I				S				O			
				B8	0	0	0	0	0	0	0	0	1	1	1	1	1	1	1	1
				B7	0	0	0	0	1	1	1	1	0	0	0	0	1	1	1	1
				B6	0	0	1	1	0	0	1	1	0	0	1	1	0	0	1	1
				B5	0	1	0	1	0	1	0	1	0	1	0	1	0	1	0	1
B4	B3	B2	B1		0	1	2	3	4	5	6	7	8	9	A	B	C	D	E	F
0	0	0	0	0				0												
0	0	0	1	1				1												
0	0	1	0	2				2												
0	0	1	1	3				3												
0	1	0	0	4				4												
0	1	0	1	5				5												
0	1	1	0	6				6												
0	1	1	1	7				7												
1	0	0	0	8				8												
1	0	0	1	9				9												
1	0	1	0	A																
1	0	1	1	B																
1	1	0	0	C																
1	1	0	1	D																
1	1	1	0	E																
1	1	1	1	F																

QR Code (Alphanumeric mode) Code table

					S				I				S				O			
				B8	0	0	0	0	0	0	0	0	1	1	1	1	1	1	1	1
				B7	0	0	0	0	1	1	1	1	0	0	0	0	1	1	1	1
				B6	0	0	1	1	0	0	1	1	0	0	1	1	0	0	1	1
				B5	0	1	0	1	0	1	0	1	0	1	0	1	0	1	0	1
B4	B3	B2	B1		0	1	2	3	4	5	6	7	8	9	A	B	C	D	E	F
0	0	0	0	0			SP	0		P										
0	0	0	1	1				1	A	Q										
0	0	1	0	2				2	B	R										
0	0	1	1	3				3	C	S										
0	1	0	0	4			$	4	D	T										
0	1	0	1	5			%	5	E	U										
0	1	1	0	6				6	F	V										
0	1	1	1	7				7	G	W										
1	0	0	0	8				8	H	X										
1	0	0	1	9				9	I	Y										
1	0	1	0	A			*	:	J	Z										
1	0	1	1	B			+		K											
1	1	0	0	C					L											
1	1	0	1	D			-		M											
1	1	1	0	E			.		N											
1	1	1	1	F			/		O											

QR Code (Binary mode) Code table

					S				I				S				O			
				B8	0	0	0	0	0	0	0	0	1	1	1	1	1	1	1	1
				B7	0	0	0	0	1	1	1	1	0	0	0	0	1	1	1	1
				B6	0	0	1	1	0	0	1	1	0	0	1	1	0	0	1	1
				B5	0	1	0	1	0	1	0	1	0	1	0	1	0	1	0	1
B4	B3	B2	B1		0	1	2	3	4	5	6	7	8	9	A	B	C	D	E	F
0	0	0	0	0			SP	0	@	P	`	p								
0	0	0	1	1			!	1	A	Q	a	q								
0	0	1	0	2			″	2	B	R	b	r								
0	0	1	1	3			#	3	C	S	c	s								
0	1	0	0	4			$	4	D	T	d	t								
0	1	0	1	5			%	5	E	U	e	u								
0	1	1	0	6			&	6	F	V	f	v								
0	1	1	1	7			’	7	G	W	g	w								
1	0	0	0	8			(	8	H	X	h	x								
1	0	0	1	9			)	9	I	Y	i	y								
1	0	1	0	A			*	:	J	Z	j	z								
1	0	1	1	B			+	;	K	[	k	{								
1	1	0	0	C			,	<	L	¥	l	|								
1	1	0	1	D			−	=	M	]	m	}								
1	1	1	0	E			.	>	N	^	n	~								
1	1	1	1	F			/	?	O	_	o	DEL								

[00H to 7FH], [A0H to DFH] can be available for QR code.

QR Code (Kanji mode) Code table

	Shift JIS	0	1	2	3	4	5	6	7	8	9	A	B	C	D	E	F
Symbol	813F		SP	、	。	,	.	・	:	;	?	!	゛	゜	´	｀	¨
	814F	＾	￣	＿	ヽ	ヾ	ゝ	ゞ	〃	仝	々	〆	〇	―	—	-	/
	815F	＼	～	∥	｜	…	‥	‘	’	“	”	（	）	〔	〕	［	］
	816F	｛	｝	〈	〉	《	》	「	」	『	』	【	】	＋	－	±	×
	8180	÷	＝	≠	＜	＞	≦	≧	∞	∴	♂	♀	°	′	″	℃	￥
	8190	＄	￠	￡	％	＃	＆	＊	＠	§	☆	★	○	●	◎	◇	
	819E		◆	□	■	△	▲	▽	▼	※	〒	→	←	↑	↓	〓	
Alphanumeric	824F	0	1	2	3	4	5	6	7	8	9						
	825F		A	B	C	D	E	F	G	H	I	J	K	L	M	N	O
	826F	P	Q	R	S	T	U	V	W	X	Y	Z					
	8280		a	b	c	d	e	f	g	h	i	j	k	l	m	n	o
	8290	p	q	r	s	t	u	v	w	x	y	z					
Hiragana	829E		ぁ	あ	ぃ	い	ぅ	う	ぇ	え	ぉ	お	か	が	き	ぎ	く
	82AE	ぐ	け	げ	こ	ご	さ	ざ	し	じ	す	ず	せ	ぜ	そ	ぞ	た
	82BE	だ	ち	ぢ	っ	つ	づ	て	で	と	ど	な	に	ぬ	ね	の	は
	82CE	ば	ぱ	ひ	び	ぴ	ふ	ぶ	ぷ	へ	べ	ぺ	ほ	ぼ	ぽ	ま	み
	82DE	む	め	も	ゃ	や	ゅ	ゆ	ょ	よ	ら	り	る	れ	ろ	ゎ	わ
	82EE	ゐ	ゑ	を	ん												
Katakana	833F		ァ	ア	ィ	イ	ゥ	ウ	ェ	エ	ォ	オ	カ	ガ	キ	ギ	ク
	834F	グ	ケ	ゲ	コ	ゴ	サ	ザ	シ	ジ	ス	ズ	セ	ゼ	ソ	ゾ	タ
	835F	ダ	チ	ヂ	ッ	ツ	ヅ	テ	デ	ト	ド	ナ	ニ	ヌ	ネ	ノ	ハ
	836F	バ	パ	ヒ	ビ	ピ	フ	ブ	プ	ヘ	ベ	ペ	ホ	ボ	ポ	マ	ミ
	8380	ム	メ	モ	ャ	ヤ	ュ	ユ	ョ	ヨ	ラ	リ	ル	レ	ロ	ヮ	ワ
	8390	ヰ	ヱ	ヲ	ン	ヴ	ヵ	ヶ									
Greek Alphabet	839E		Α	Β	Γ	Δ	Ε	Ζ	Η	Θ	Ι	Κ	Λ	Μ	Ν	Ξ	Ο
	83AE	Π	Ρ	Σ	Τ	Υ	Φ	Χ	Ψ	Ω							
	83BE		α	β	γ	δ	ε	ζ	η	θ	ι	κ	λ	μ	ν	ξ	ο
	83CE	π	ρ	σ	τ	υ	φ	χ	ψ	ω							
Russian Alphabet	843F		А	Б	В	Г	Д	Е	Ё	Ж	З	И	Й	К	Л	М	Н
	844F	О	П	Р	С	Т	У	Ф	Х	Ц	Ч	Ш	Щ	Ъ	Ы	Ь	Э
	845F	Ю	Я														
	846F		а	б	в	г	д	е	ё	ж	з	и	й	к	л	м	н
	8480	о	п	р	с	т	у	ф	х	ц	ч	ш	щ	ъ	ы	ь	э
	8490	ю	я														

	Shift JIS	0	1	2	3	4	5	6	7	8	9	A	B	C	D	E	F
ア	889E		亜	唖	娃	阿	哀	愛	挨	姶	逢	葵	茜	穐	悪	握	渥
	88AE	旭	葦	芦	鯵	梓	圧	斡	扱	宛	姐	虻	飴	絢	綾	鮎	或
	88BE	粟	袷	安	庵	按	暗	案	闇	鞍	杏						
イ	88BE											以	伊	位	依	偉	囲
	88CE	夷	委	威	尉	惟	意	慰	易	椅	為	畏	異	移	維	緯	胃
	88DE	萎	衣	謂	違	遺	医	井	亥	域	育	郁	磯	一	壱	溢	逸
	88EE	稲	茨	芋	鰯	允	印	咽	員	因	姻	引	飲	淫	胤	蔭	
	893F		院	陰	隠	韻	吋										
ウ	893F							右	宇	烏	羽	迂	雨	卯	鵜	窺	丑
	894F	碓	臼	渦	嘘	唄	欝	蔚	鰻	姥	厩	浦	瓜	閏	噂	云	運
	895F	雲															
エ	895F		荏	餌	叡	営	嬰	影	映	曳	栄	永	泳	洩	瑛	盈	穎
	896F	頴	英	衛	詠	鋭	液	疫	益	駅	悦	謁	越	閲	榎	厭	円
	8980	園	堰	奄	宴	延	怨	掩	援	沿	演	炎	焔	煙	燕	猿	縁
	8990	艶	苑	薗	遠	鉛	鴛	塩									
オ	8990								於	汚	甥	凹	央	奥	往	応	
	899E		押	旺	横	欧	殴	王	翁	襖	鴬	鴎	黄	岡	沖	荻	億
	89AE	屋	憶	臆	桶	牡	乙	俺	卸	恩	温	穏	音				
カ	89AE													下	化	仮	何
	89BE	伽	価	佳	加	可	嘉	夏	嫁	家	寡	科	暇	果	架	歌	河
	89CE	火	珂	禍	禾	稼	箇	花	苛	茄	荷	華	菓	蝦	課	嘩	貨
	89DE	迦	過	霞	蚊	俄	峨	我	牙	画	臥	芽	蛾	賀	雅	餓	駕
	89EE	介	会	解	回	塊	壊	廻	快	怪	悔	恢	懐	戒	拐	改	
	8A3F		魁	晦	械	海	灰	界	皆	絵	芥	蟹	開	階	貝	凱	劾
	8A4F	外	咳	害	崖	慨	概	涯	碍	蓋	街	該	鎧	骸	浬	馨	蛙
	8A5F	垣	柿	蛎	鈎	劃	嚇	各	廓	拡	撹	格	核	殻	獲	確	穫
	8A6F	覚	角	赫	較	郭	閣	隔	革	学	岳	楽	額	顎	掛	笠	樫
	8A80	橿	梶	鰍	潟	割	喝	恰	括	活	渇	滑	葛	褐	轄	且	鰹
	8A90	叶	椛	樺	鞄	株	兜	竈	蒲	釜	鎌	噛	鴨	栢	茅	萱	
	8A9E		粥	刈	苅	瓦	乾	侃	冠	寒	刊	勘	勧	巻	喚	堪	姦
	8AAE	完	官	寛	干	幹	患	感	慣	憾	換	敢	柑	桓	棺	款	歓
	8ABE	汗	漢	澗	潅	環	甘	監	看	竿	管	簡	緩	缶	翰	肝	艦
	8ACE	莞	観	諫	貫	還	鑑	間	閑	関	陥	韓	館	舘	丸	含	岸
	8ADE	巌	玩	癌	眼	岩	翫	贋	雁	頑	顔	願					

	Shift JIS	0	1	2	3	4	5	6	7	8	9	A	B	C	D	E	F
キ	8ADE												企	伎	危	喜	器
	8AEE	基	奇	嬉	寄	岐	希	幾	忌	揮	机	旗	既	期	棋	棄	
	8B3F		機	帰	毅	気	汽	畿	祈	季	稀	紀	徽	規	記	貴	起
	8B4F	軌	輝	飢	騎	鬼	亀	偽	儀	妓	宜	戯	技	擬	欺	犠	疑
	8B5F	祇	義	蟻	誼	議	掬	菊	鞠	吉	吃	喫	桔	橘	詰	砧	杵
	8B6F	黍	却	客	脚	虐	逆	丘	久	仇	休	及	吸	宮	弓	急	救
	8B80	朽	求	汲	泣	灸	球	究	窮	笈	級	糾	給	旧	牛	去	居
	8B90	巨	拒	拠	挙	渠	虚	許	距	鋸	漁	禦	魚	亨	享	京	
	8B9E		供	峡	僑	兇	競	共	凶	協	匡	卿	叫	喬	境	峡	強
	8BAE	彊	怯	恐	恭	挟	教	橋	況	狂	狭	矯	胸	脅	興	蕎	郷
	8BBE	鏡	響	饗	驚	仰	凝	尭	暁	業	局	曲	極	玉	桐	粁	僅
	8BCE	勤	均	巾	錦	斤	欣	欽	琴	禁	禽	筋	緊	芹	菌	衿	襟
	8BDE	謹	近	金	吟	銀											
ク	8BDE						九	倶	句	区	狗	玖	矩	苦	躯	駆	駈
	8BEE	駒	具	愚	虞	喰	空	偶	寓	遇	隅	串	櫛	釧	屑	屈	
	8C3F		掘	窟	沓	靴	轡	窪	熊	隈	粂	栗	繰	桑	鍬	勲	君
	8C4F	薫	訓	群	軍	郡											
ケ	8C4F						卦	袈	祁	係	傾	刑	兄	啓	圭	珪	型
	8C5F	契	形	径	恵	慶	慧	憩	掲	携	敬	景	桂	渓	畦	稽	系
	8C6F	経	継	繋	罫	茎	荊	蛍	計	詣	警	軽	頚	鶏	芸	迎	鯨
	8C80	劇	戟	撃	激	隙	桁	傑	欠	決	潔	穴	結	血	訣	月	件
	8C90	倹	倦	健	兼	券	剣	喧	圏	堅	嫌	建	憲	懸	拳	捲	
	8C9E		検	権	牽	犬	献	研	硯	絹	県	肩	見	謙	賢	軒	遣
	8CAE	鍵	険	顕	験	鹸	元	原	厳	幻	弦	減	源	玄	現	絃	舷
	8CBE	言	諺	限													
コ	8CBE				乎	個	古	呼	固	姑	孤	己	庫	弧	戸	故	枯
	8CCE	湖	狐	糊	袴	股	胡	菰	虎	誇	跨	鈷	雇	顧	鼓	五	互
	8CDE	伍	午	呉	吾	娯	後	御	悟	梧	檎	瑚	碁	語	誤	護	醐
	8DEE	乞	鯉	交	佼	侯	候	倖	光	公	功	効	勾	厚	口	向	
	8D3F		后	喉	坑	垢	好	孔	孝	宏	工	巧	巷	幸	広	庚	康
	8D4F	弘	恒	慌	抗	拘	控	攻	昂	晃	更	杭	校	梗	構	江	洪
	8D5F	浩	港	溝	甲	皇	硬	稿	糠	紅	紘	絞	綱	耕	考	肯	肱
	8D6F	腔	膏	航	荒	行	衡	講	貢	購	郊	酵	鉱	砿	鋼	閤	降
	8D80	項	香	高	鴻	剛	劫	号	合	壕	拷	濠	豪	轟	麹	克	刻

	Shift JIS	0	1	2	3	4	5	6	7	8	9	A	B	C	D	E	F
コ	8D90	告	国	穀	酷	鵠	黒	獄	漉	腰	甑	忽	惚	骨	狛	込	
	8D9E		此	頃	今	困	坤	墾	婚	恨	懇	昏	昆	根	梱	混	痕
	8DAE	紺	艮	魂													
サ	8DAE				些	佐	叉	唆	嵯	左	差	査	沙	瑳	砂	詐	鎖
	8DBE	裟	坐	座	挫	債	催	再	最	哉	塞	妻	宰	彩	才	採	栽
	8DCE	歳	済	災	采	犀	砕	砦	祭	斎	細	菜	裁	載	際	剤	在
	8DDE	材	罪	財	冴	坂	阪	堺	榊	肴	咲	崎	埼	碕	鷺	作	削
	8DEE	咋	搾	昨	朔	柵	窄	策	索	錯	桜	鮭	笹	匙	冊	刷	
	8E3F		察	拶	撮	擦	札	殺	薩	雑	皐	鯖	捌	錆	鮫	皿	晒
	8E4F	三	傘	参	山	惨	撒	散	桟	燦	珊	産	算	纂	蚕	讃	賛
	8E5F	酸	餐	斬	暫	残											
シ	8E5F						仕	仔	伺	使	刺	司	史	嗣	四	士	始
	8E6F	姉	姿	子	屍	市	師	志	思	指	支	孜	斯	施	旨	枝	止
	8E80	死	氏	獅	祉	私	糸	紙	紫	肢	脂	至	視	詞	詩	試	誌
	8E90	諮	資	賜	雌	飼	歯	事	似	侍	児	字	寺	慈	持	時	
	8E9E		次	滋	治	爾	璽	痔	磁	示	而	耳	自	蒔	辞	汐	鹿
	8EAE	式	識	鳴	竺	軸	宍	雫	七	叱	執	失	嫉	室	悉	湿	漆
	8EBE	疾	質	実	蔀	篠	偲	柴	芝	屡	蕊	縞	舎	写	射	捨	赦
	8ECE	斜	煮	社	紗	者	謝	車	遮	蛇	邪	借	勺	尺	杓	灼	爵
	8EDE	酌	釈	錫	若	寂	弱	惹	主	取	守	手	朱	殊	狩	珠	種
	8EEE	腫	趣	酒	首	儒	受	呪	寿	授	樹	綬	需	囚	収	周	
	8F3F		宗	就	州	修	愁	拾	洲	秀	秋	終	繍	習	臭	舟	蒐
	8F4F	衆	襲	讐	蹴	輯	週	酋	酬	集	醜	什	住	充	十	従	戎
	8F5F	柔	汁	渋	獣	縦	重	銃	叔	夙	宿	淑	祝	縮	粛	塾	熟
	8F6F	出	術	述	俊	峻	春	瞬	竣	舜	駿	准	循	旬	楯	殉	淳
	8F80	準	潤	盾	純	巡	遵	醇	順	処	初	所	暑	曙	渚	庶	緒
	8F90	署	書	薯	藷	諸	助	叙	女	序	徐	恕	鋤	除	傷	償	
	8F9E		勝	匠	升	召	哨	商	唱	嘗	奨	妾	娼	宵	将	小	少
	8FAE	尚	庄	床	廠	彰	承	抄	招	掌	捷	昇	昌	昭	晶	松	梢
	8FBE	樟	樵	沼	消	渉	湘	焼	焦	照	症	省	硝	礁	祥	称	章
	8FCE	笑	粧	紹	肖	菖	蔣	蕉	衝	裳	訟	証	詔	詳	象	賞	醤
	8FDE	鉦	鍾	鐘	障	鞘	上	丈	丞	乗	冗	剰	城	場	壌	嬢	常
	8FEE	情	擾	条	杖	浄	状	畳	穣	蒸	譲	醸	錠	嘱	埴	飾	
	903F		拭	植	殖	燭	織	職	色	触	食	蝕	辱	尻	伸	信	侵

	Shift JIS	0	1	2	3	4	5	6	7	8	9	A	B	C	D	E	F
シ	904F	唇	娠	寝	審	心	慎	振	新	晋	森	榛	浸	深	申	疹	真
	905F	神	秦	紳	臣	芯	薪	親	診	身	辛	進	針	震	人	仁	刃
	906F	塵	壬	尋	甚	尽	腎	訊	迅	陣	靭						
ス	906F											笥	諏	須	酢	図	厨
	9080	逗	吹	垂	帥	推	水	炊	睡	粋	翠	衰	遂	酔	錐	錘	随
	9090	瑞	髄	崇	嵩	数	枢	趨	雛	据	杉	椙	菅	頗	雀	裾	
	909E		澄	摺	寸												
セ	909E					世	瀬	畝	是	凄	制	勢	姓	征	性	成	政
	90AE	整	星	晴	棲	栖	正	清	牲	生	盛	精	聖	声	製	西	誠
	90BE	誓	請	逝	醒	青	静	斉	税	脆	隻	席	惜	戚	斥	昔	析
	90CE	石	積	籍	績	脊	責	赤	跡	蹟	碩	切	拙	接	摂	折	設
	90DE	窃	節	説	雪	絶	舌	蝉	仙	先	千	占	宣	専	尖	川	戦
	90EE	扇	撰	栓	栴	泉	浅	洗	染	潜	煎	煽	旋	穿	箭	線	
	913F		繊	羨	腺	舛	船	薦	詮	賤	践	選	遷	銭	銑	閃	鮮
	914F	前	善	漸	然	全	禪	繕	膳	糎							
ソ	914F										噌	塑	岨	措	曾	曽	楚
	915F	狙	疏	疎	礎	祖	租	粗	素	組	蘇	訴	阻	遡	鼠	僧	創
	916F	双	叢	倉	喪	壮	奏	爽	宋	層	匝	惣	想	捜	掃	挿	掻
	9180	操	早	曹	巣	槍	槽	漕	燥	争	痩	相	窓	糟	総	綜	聡
	9190	草	荘	葬	蒼	藻	装	走	送	遭	鎗	霜	騒	像	増	憎	
	919E		臓	蔵	贈	造	促	側	則	即	息	捉	束	測	足	速	俗
	91AE	属	賊	族	続	卒	袖	其	揃	存	孫	尊	損	村	遜		
タ	91AE															他	多
	91BE	太	汰	詑	唾	堕	妥	惰	打	柁	舵	楕	陀	駄	騨	体	堆
	91CE	対	耐	岱	帯	待	怠	態	戴	替	泰	滞	胎	腿	苔	袋	貸
	91DE	退	逮	隊	黛	鯛	代	台	大	第	醍	題	鷹	滝	瀧	卓	啄
	91EE	宅	托	択	拓	沢	濯	琢	託	鐸	濁	諾	茸	凧	蛸	只	
	923F		叩	但	達	辰	奪	脱	巽	竪	辿	棚	谷	狸	鱈	樽	誰
	924F	丹	単	嘆	坦	担	探	旦	歎	淡	湛	炭	短	端	箪	綻	耽
	925F	胆	蛋	誕	鍛	団	壇	弾	断	暖	檀	段	男	談			
チ	925F														値	知	地
	926F	弛	恥	智	池	痴	稚	置	致	蜘	遅	馳	築	畜	竹	筑	蓄
	9280	逐	秩	窒	茶	嫡	着	中	仲	宙	忠	抽	昼	柱	注	虫	衷
	9290	註	酎	鋳	駐	樗	瀦	猪	苧	著	貯	丁	兆	凋	喋	寵	

	Shift JIS	0	1	2	3	4	5	6	7	8	9	A	B	C	D	E	F
チ	929E		帖	帳	庁	弔	張	彫	徴	懲	挑	暢	朝	潮	牒	町	眺
	92AE	聴	脹	腸	蝶	調	諜	超	跳	銚	長	頂	鳥	勅	捗	直	朕
	92BE	沈	珍	賃	鎮	陳											
ツ	92BE						津	墜	椎	槌	追	鎚	痛	通	塚	栂	掴
	92CE	槻	佃	漬	柘	辻	蔦	綴	鍔	椿	潰	坪	壷	嬬	紬	爪	吊
	92DE	釣	鶴														
テ	92DE			亭	低	停	偵	剃	貞	呈	堤	定	帝	底	庭	廷	弟
	92EE	悌	抵	挺	提	梯	汀	碇	禎	程	締	艇	訂	諦	蹄	逓	
	933F		邸	鄭	釘	鼎	泥	摘	擢	敵	滴	的	笛	適	鏑	溺	哲
	934F	徹	撤	轍	迭	鉄	典	填	天	展	店	添	纏	甜	貼	転	顛
	935F	点	伝	殿	澱	田	電										
ト	935F							兎	吐	堵	塗	妬	屠	徒	斗	杜	渡
	936F	登	菟	賭	途	都	鍍	砥	砺	努	度	土	奴	怒	倒	党	冬
	9380	凍	刀	唐	塔	塘	套	宕	島	嶋	悼	投	搭	東	桃	梼	棟
	9390	盗	淘	湯	涛	灯	燈	当	痘	祷	等	答	筒	糖	統	到	
	939E		董	蕩	藤	討	謄	豆	踏	逃	透	鐙	陶	頭	騰	闘	働
	93AE	動	同	堂	導	憧	撞	洞	瞳	童	胴	萄	道	銅	峠	鴇	匿
	93BE	得	徳	涜	特	督	禿	篤	毒	独	読	栃	橡	凸	突	椴	届
	93CE	鳶	苫	寅	酉	瀞	噸	屯	惇	敦	沌	豚	遁	頓	呑	曇	鈍
ナ	93DE	奈	那	内	乍	凪	薙	謎	灘	捺	鍋	楢	馴	縄	畷	南	楠
	93EE	軟	難	汝													
ニ	93EE				二	尼	弐	迩	匂	賑	肉	虹	廿	日	乳	入	
	943F		如	尿	韮	任	妊	忍	認								
ヌ	943F									濡							
ネ	943F										禰	祢	寧	葱	猫	熱	年
	944F	念	捻	撚	燃	粘											
ノ	944F						乃	廼	之	埜	嚢	悩	濃	納	能	脳	膿
	945F	農	覗	蚤													
ハ	945F				巴	把	播	覇	杷	波	派	琶	破	婆	罵	芭	馬
	946F	俳	廃	拝	排	敗	杯	盃	牌	背	肺	輩	配	倍	培	媒	梅
	9480	楳	煤	狽	買	売	賠	陪	這	蝿	秤	矧	萩	伯	剥	博	拍
	9490	柏	泊	白	箔	粕	舶	薄	迫	曝	漠	爆	縛	莫	駁	麦	
	949E		函	箱	硲	箸	肇	筈	櫨	幡	肌	畑	畠	八	鉢	溌	発
	94AE	醗	髪	伐	罰	抜	筏	閥	鳩	噺	塙	蛤	隼	伴	判	半	反

	Shift JIS	0	1	2	3	4	5	6	7	8	9	A	B	C	D	E	F
ハ	94BE	叛	帆	搬	斑	板	氾	汎	版	犯	班	畔	繁	般	藩	販	範
	94CE	釆	煩	頒	飯	挽	晩	番	盤	磐	蕃	蛮					
ヒ	94CE												匪	卑	否	妃	庇
	94DE	彼	悲	扉	批	披	斐	比	泌	疲	皮	碑	秘	緋	罷	肥	被
	94EE	誹	費	避	非	飛	樋	簸	備	尾	微	枇	毘	琵	眉	美	
	953F		鼻	柊	稗	匹	疋	髭	彦	膝	菱	肘	弼	必	畢	筆	逼
	954F	桧	姫	媛	紐	百	謬	俵	彪	標	氷	漂	瓢	票	表	評	豹
	955F	廟	描	病	秒	苗	錨	鋲	蒜	蛭	鰭	品	彬	斌	浜	瀕	貧
	956F	賓	頻	敏	瓶												
フ	956F					不	付	埠	夫	婦	富	冨	布	府	怖	扶	敷
	9580	斧	普	浮	父	符	腐	膚	芙	譜	負	賦	赴	阜	附	侮	撫
	9590	武	舞	葡	蕪	部	封	楓	風	葺	蕗	伏	副	復	幅	服	
	959E		福	腹	複	覆	淵	弗	払	沸	仏	物	鮒	分	吻	噴	墳
	95AE	憤	扮	焚	奮	粉	糞	紛	雰	文	聞						
ヘ	95AE											丙	併	兵	塀	幣	平
	95BE	弊	柄	並	蔽	閉	陛	米	頁	僻	壁	癖	碧	別	瞥	蔑	箆
	95CE	偏	変	片	篇	編	辺	返	遍	便	勉	娩	弁	鞭			
ホ	95CE														保	舗	鋪
	95DE	圃	捕	歩	甫	補	輔	穂	募	墓	慕	戊	暮	母	簿	菩	倣
	95EE	俸	包	呆	報	奉	宝	峰	峯	崩	庖	抱	捧	放	方	朋	
	963F		法	泡	烹	砲	縫	胞	芳	萌	蓬	蜂	褒	訪	豊	邦	鋒
	964F	飽	鳳	鵬	乏	亡	傍	剖	坊	妨	帽	忘	忙	房	暴	望	某
	965F	棒	冒	紡	肪	膨	謀	貌	貿	鉾	防	吠	頬	北	僕	卜	墨
	966F	撲	朴	牧	睦	穆	釦	勃	没	殆	堀	幌	奔	本	翻	凡	盆
マ	9680	摩	磨	魔	麻	埋	妹	昧	枚	毎	哩	槙	幕	膜	枕	鮪	柾
	9690	鱒	桝	亦	俣	又	抹	末	沫	迄	侭	繭	麿	万	慢	満	
	969E		漫	蔓													
ミ	969E				味	未	魅	巳	箕	岬	密	蜜	湊	蓑	稔	脈	妙
	96AE	粍	民	眠													
ム	96AE				務	夢	無	牟	矛	霧	鵡	椋	婿	娘			
メ	96AE														冥	名	命
	96BE	明	盟	迷	銘	鳴	姪	牝	滅	免	棉	綿	緬	面	麺		
モ	96BE															摸	模
	96CE	茂	妄	孟	毛	猛	盲	網	耗	蒙	儲	木	黙	目	杢	勿	餅

	Shift JIS	0	1	2	3	4	5	6	7	8	9	A	B	C	D	E	F
モ	96DE	尤	戻	籾	貰	問	悶	紋	門	匁							
ヤ	96DE										也	冶	夜	爺	耶	野	弥
	96EE	矢	厄	役	約	薬	訳	躍	靖	柳	薮	鑓					
ユ	96EE												愉	愈	油	癒	
	973F		諭	輸	唯	佑	優	勇	友	宥	幽	悠	憂	揖	有	柚	湧
	974F	涌	猶	猷	由	祐	裕	誘	遊	邑	郵	雄	融	夕			
ヨ	974F														予	余	与
	975F	誉	輿	預	傭	幼	妖	容	庸	揚	揺	擁	曜	楊	様	洋	溶
	976F	熔	用	窯	羊	耀	葉	蓉	要	謡	踊	遥	陽	養	慾	抑	欲
	9780	沃	浴	翌	翼	淀											
ラ	9780						羅	螺	裸	来	莱	頼	雷	洛	絡	落	酪
	9790	乱	卵	嵐	欄	濫	藍	蘭	覧								
リ	9790									利	吏	履	李	梨	理	璃	
	979E		痢	裏	裡	里	離	陸	律	率	立	葎	掠	略	劉	流	溜
	97AE	琉	留	硫	粒	隆	竜	龍	侶	慮	旅	虜	了	亮	僚	両	凌
	97BE	寮	料	梁	涼	猟	療	瞭	稜	糧	良	諒	遼	量	陵	領	力
	97CE	緑	倫	厘	林	淋	燐	琳	臨	輪	隣	鱗	麟				
ル	97CE													瑠	塁	涙	累
	97DE	類															
レ	97DE		令	伶	例	冷	励	嶺	怜	玲	礼	苓	鈴	隷	零	霊	麗
	97EE	齢	暦	歴	列	劣	烈	裂	廉	恋	憐	漣	煉	簾	練	聯	
	983F		蓮	連	錬												
ロ	983F					呂	魯	櫓	炉	賂	路	露	労	婁	廊	弄	朗
	984F	楼	榔	浪	漏	牢	狼	篭	老	聾	蝋	郎	六	麓	禄	肋	録
	985F	論															
ワ	985F		倭	和	話	歪	賄	脇	惑	枠	鷲	亙	亘	鰐	詫	藁	蕨
	986F	椀	湾	碗	腕												

	Shift JIS	0	1	2	3	4	5	6	7	8	9	A	B	C	D	E	F
一	989E		弍	丐	丕												
丨	989E					个	丱										
丶	989E							丶	丼								
丿	989E									丿	乂	乖	乘				
乙	989E													亂			
亅	989E														亅	豫	亊
	98AE	舒															
二	98AE		弍	干	亞	亟											
十	98AE						十	亢	京	亳	亶						
人	98AE											从	仍	仄	仆	仂	仗
	98BE	仞	仭	仟	价	伉	佚	估	佛	佝	佗	佇	佶	侈	侏	侘	佻
	98CE	佩	佰	侑	佯	來	侖	儘	俔	俟	俎	俘	俛	俑	俚	俐	俤
	98DE	俥	倚	倨	倔	倪	倥	倅	伜	俶	倡	倩	倬	俾	俯	們	倆
	98EE	偃	假	會	偕	偐	偈	做	偖	偬	偸	傀	傚	傅	傴	傲	
	993F		僉	僊	傳	僂	僖	僞	僥	僭	僭	僮	價	僵	儉	儁	儂
	994F	儖	儕	儔	儚	儡	儺	儷	儼	儻							
儿	994F										儿	兀	兒	兌	兔	兢	競
入	995F	兩	兪														
八	995F			兮	冀												
冂	995F					冂	囘	册	冉	冏	冑	冓	冕				
冖	995F													冖	冤	冠	冢
	996F	寫	冪														
冫	996F			冫	决	冱	冲	冰	况	冽	凅	凉	凛				
几	996F													几	處	凩	凭
	9980	凰															
凵	9980		凵	函													
刀	9980				刄	刋	刔	刎	刧	刪	刮	刳	刹	剏	剄	剋	剌
	9990	剞	剔	剪	剴	剩	剳	剿	剽	劍	劔	劒	剱	劈	劑	辨	
	999E		辨														
力	999E			劬	劭	劼	劵	勁	勍	勗	勞	勣	勦	飭	勠	勳	勵
	99AE	勸															
勹	99AE		勹	匆	匈	甸	匍	匐	匏								
匕	99AE									匕							
匚	99AE										匚	匣	匯	匱	匳		

	Shift JIS	0	1	2	3	4	5	6	7	8	9	A	B	C	D	E	F
匸	99AE															匸	區
十	99BE	卆	卅	丗	卉	卍	準										
卜	99BE							卞									
卩	99BE								卩	卮	夘	卻	卷				
厂	99BE													厂	厖	厠	厦
	99CE	厥	厮	厰													
厶	99CE				厶	參	簒										
又	99CE							雙	叟	曼	燮						
口	99CE											叮	叨	叭	叼	吁	吽
	99DE	呀	听	吭	吼	吮	吶	吩	吝	呎	咏	呵	咎	呟	呱	呷	呰
	99EE	咒	呻	咀	呪	咄	咐	咆	哇	咢	咸	咥	咬	哄	哈	咨	
	9A3F		咫	哂	咤	咾	咼	哘	哥	哦	唏	唔	哽	哮	哭	哺	哢
	9A4F	唹	啀	啣	啌	售	啜	啅	啖	啗	唸	唳	啝	喙	喀	咯	喊
	9A5F	喟	啻	啾	喘	喞	單	啼	喃	喻	喇	喨	嗚	嗅	嗟	嗄	嗜
	9A6F	嗤	嗔	嘔	嗷	嘖	嗾	嗽	嘛	嗹	噎	噐	營	嘴	嘶	嘲	嘸
	9A80	噫	噤	嘯	噬	噪	嚆	嚀	嚊	嚠	嚔	噓	嚥	嚮	嚶	嚴	囂
	9A90	嚼	囁	囃	囀	囈	囎	囑	囓								
囗	9A90									囗	囮	囹	圀	囿	圄	圉	
	9A9E		圈	國	圍	圓	團	圖	嗇	圜							
土	9A9E										圢	圻	圾	坎	坼	址	坏
	9AAE	坩	埀	垈	坡	垉	垣	垓	垠	垳	垤	垪	垰	埃	埆	埔	埒
	9ABE	埓	堊	埖	埣	堋	堙	堝	塲	堡	塢	塋	塰	毀	塒	堽	塹
	9ACE	墅	墹	墟	墫	墺	壞	墻	墸	墮	壅	壓	壑	壗	壙	壘	壓
	9ADE	壘	壤	壟													
士	9ADE				壯	壺	壹	壻	壺	壽							
夂	9ADE										夂						
夊	9ADE											夊	夐				
夕	9ADE													夛	梦	夥	
大	9ADE																夬
	9AEE	夭	本	夸	夾	竒	奕	奐	奎	奚	奘	奢	奠	奧	奬	奩	
女	9B3F		奸	妁	妝	佞	侫	妣	妲	姆	姨	姜	妍	姙	姚	娥	娟
	9B4F	娑	娜	娉	娚	婀	婬	婉	娵	娶	婢	婪	媚	媼	媾	嫋	嫂
	9B5F	媽	嫣	嫗	嫦	嫩	嫖	嫺	嫻	嬌	嬋	嬖	嬲	嫐	嬪	嬶	嬾
	9B6F	孃	孅	孀													

	Shift JIS	0	1	2	3	4	5	6	7	8	9	A	B	C	D	E	F
子	9B6F				孑	孕	孚	孛	孥	孩	孰	孳	孵	學	斈	孺	
宀	9B6F																宀
	9B80	它	宦	宸	寃	寇	寉	寔	寐	寤	實	寢	寞	寥	寫	寰	寶
	9B90	寳															
寸	9B90		尅	將	專	對											
小	9B90						尐	尠									
尢	9B90								尢	尨							
尸	9B90										尸	尹	屁	屆	屎	屓	
	9B9E		屐	屏	孱	屬											
屮	9B9E						屮										
山	9B9E							屹	屶	屹	岌	岑	岔	妛	岫	岻	岼
	9BAE	岼	岷	峅	岾	峇	峙	峩	峽	峺	峭	嶌	峪	崋	崕	崗	嵜
	9BBE	崟	崛	崑	崔	崢	崚	崙	崘	嵌	嵒	嵎	嵋	嵬	嵳	嶇	嶄
	9BCE	嶄	嶂	嶢	嶝	嶬	嶮	嶽	嶐	嶷	嶼	巉	巍	巔	巒	巖	
巛	9BCE																巛
工	9BDE	巫															
巳	9BDE		已	巵													
巾	9BDE				帋	帚	帙	帑	帛	帶	帷	幄	幃	幀	幎	幗	幔
	9BEE	幟	幢	幣	幫												
干	9BEE					幵	并										
幺	9BEE							幺	麼								
广	9BEE									广	庠	廁	廂	廈	廐	廏	
	9C3F		廖	廣	廝	廚	廛	廢	廡	廨	廩	廬	廱	廳	廳		
廴	9C3F															廴	廸
廾	9C4F	廾	弃	弉	彝	彜											
弋	9C4F						弋	弑									
弓	9C4F								弓	弩	弭	弸	彁	彈	彌	彎	弯
彑	9C5F	彑	彖	彗	彙												
彡	9C5F					彡	彭										
彳	9C5F							彳	彷	徃	徂	彿	徊	很	徑	徇	從
	9C6F	徙	徘	徠	徨	徭	徼										
心	9C6F							忖	忻	忤	忸	忱	忝	悳	忿	怡	恠
	9C80	怙	怐	怩	怎	怱	怛	怕	怫	怦	怏	怺	恚	恁	恪	恷	悒
	9C90	悠	恆	悅	悉	恃	恤	恂	恬	恫	恙	悁	悍	惧	悃	悚	

	Shift JIS	0	1	2	3	4	5	6	7	8	9	A	B	C	D	E	F
心	9C9E		悄	悛	悖	悗	悒	悧	悋	惡	悸	惠	惓	悴	忰	悽	惆
	9CAE	悵	惘	慍	愕	愆	惶	惷	愀	惴	惺	愃	愡	惻	惱	愍	愎
	9CBE	慇	愾	愨	愧	慊	愿	愼	愬	愴	愽	慂	慄	慳	慷	慘	慙
	9CCE	慚	慫	慴	慯	慥	慱	慟	慝	慓	慵	憙	憖	憇	憬	憔	憚
	9CDE	憊	憑	憫	憮	懌	懊	應	懷	懈	懃	懆	憺	懋	罹	懍	懦
	9CEE	懣	懶	懺	懴	懿	懽	懼	懾	戀							
戈	9CEE										戈	戉	戍	戍	戔	戛	
	9D3F		戞	戡	截	戮	戰	戲	戳								
戸	9D3F									扁							
手	9D3F										扎	扞	扣	扛	扠	扨	扼
	9D4F	抂	抉	找	抒	抓	抖	拔	抃	抔	拗	甘	抻	拏	拿	拆	擔
	9D5F	拈	拜	拌	拊	拂	拇	抛	拉	挌	拮	拱	挧	挂	挈	拯	拵
	9D6F	捐	挾	捍	搜	捏	掖	掎	掀	掫	捶	掣	掏	掉	掟	掵	捫
	9D80	捩	掾	揩	揀	揆	揣	揉	插	揶	揄	搖	搴	搆	搓	搦	槍
	9D90	攝	搗	搨	搏	摧	摯	摶	摎	攪	撕	撓	撥	撩	撈	撼	
	9D9E		據	擒	擅	擇	撻	擘	擂	擱	擧	舉	擠	擡	抬	擣	擯
	9DAE	攬	擶	擴	擲	擺	攀	擽	攘	攜	攢	攤	攣	攫			
攴	9DAE														攴	攵	攷
	9DBE	收	攸	畋	效	敖	敕	敍	敘	敞	敝	敲	數	斂	斃	變	
斗	9DBE																斛
	9DCE	斟															
斤	9DCE		斫	斷													
方	9DCE				旃	旆	旁	旄	旌	旒	旛	旙					
旡	9DCE												无	旡			
日	9DCE														旱	杲	昊
	9DDE	昃	旻	杳	昵	昶	昴	昜	晏	晄	晉	晁	晞	晝	晤	晧	晨
	9DEE	晟	晢	晰	暃	暈	暎	暉	暄	暘	暝	曁	暹	曉	暾	暼	
	9E3F		曄	暸	曖	曚	曠	昿	曦	曩							
曰	9E3F										曰	曳	曷				
月	9E3F													朏	朖	朞	朦
	9E4F	朧	霸														
木	9E4F			朮	朿	朶	杁	朸	朷	杆	杞	杠	杙	杣	杤	枉	杰
	9E5F	枩	杼	杪	枌	枋	枦	枡	枅	枷	柯	枴	柬	枳	柩	枸	柤
	9E6F	柞	柝	柢	柮	枹	柎	柆	柧	檜	栞	框	栩	桀	桍	栲	桎

	Shift JIS	0	1	2	3	4	5	6	7	8	9	A	B	C	D	E	F
木	9E80	梳	栫	桙	档	桷	桿	梟	梏	梭	梔	條	梛	梃	檮	梹	桴
	9E90	梵	梠	梺	椏	梍	桾	椁	棊	椈	棘	椢	椦	棡	椌	棍	
	9E9E		棔	棧	棕	椶	椒	椄	棗	棣	椥	棹	棠	棯	椨	椪	椚
	9EAE	椣	椡	棆	楹	楷	楜	楸	楫	楔	楾	楮	椹	楴	椽	楙	椰
	9EBE	楡	楞	楝	榁	楪	榲	榮	槐	榿	槁	槓	榾	槎	寨	槊	槝
	9ECE	榻	槃	榧	樮	榑	榠	榜	榕	榴	槞	槨	樂	樛	槿	權	槹
	9EDE	槲	槧	樅	榱	樞	槭	樔	槫	樊	樒	櫁	槠	樓	橄	樌	橲
	9EEE	樶	橸	橇	橢	橙	橦	橈	樸	樢	檐	檍	檠	檄	檢	檣	
	9F3F		檗	蘗	檻	櫃	櫂	檸	檳	檬	櫞	櫑	櫟	檪	櫚	櫪	櫻
	9F4F	欅	蘖	櫺	欒	欖	鬱	欟									
欠	9F4F								欸	欷	盜	欹	飲	歇	歃	歉	歐
	9F5F	歙	歔	歛	歟	歡											
止	9F5F						歸										
歹	9F5F							歹	歿	殀	殄	殃	殍	殘	殕	殞	殤
	9F6F	殪	殫	殯	殲	殲											
殳	9F6F						殳	殷	殼	毆							
毋	9F6F										毋	毓					
毛	9F6F												毟	毬	毫	毳	毯
	9F80	麾	氈														
氏	9F80			氓													
气	9F80				气	氛	氤	氣									
水	9F80								汞	汕	汢	汪	沂	沍	沁	沁	沛
	9F90	汾	汨	汳	沒	沐	泄	泱	泓	沽	泗	泅	泝	沮	沱	沾	
	9F9E		沺	泛	泯	泙	泪	洟	衍	洶	洫	洽	洸	洙	洵	洳	洒
	9FAE	洌	浣	涓	浤	浚	浹	浙	涎	涕	濤	涅	淹	渕	渊	涵	淇
	9FBE	淦	涸	淆	淬	淞	淌	淨	淒	淅	淺	淙	淤	淕	淪	淮	渭
	9FCE	湮	渟	渙	湲	湟	渾	渣	湫	渫	湶	湍	渟	湃	渺	湎	渤
	9FDE	滿	渝	游	溂	溪	溘	滉	溷	滓	溽	溯	滄	溲	滔	滕	溏
	9FEE	溥	滂	溟	潁	漑	灌	滬	滸	滾	漿	滲	漱	滯	漲	滌	
	E03F		漾	漓	滷	澆	潺	潸	澁	澀	潯	潛	潛	潭	澂	潼	潘
	E04F	澎	澑	濂	潦	澳	澣	澡	澤	澹	濆	澪	濟	濕	濬	濔	濘
	E05F	濱	濮	濛	瀉	瀋	濺	瀑	瀁	瀏	濾	瀛	瀚	瀦	瀝	瀘	瀟
	E06F	瀰	瀾	瀲	灑	灣											
火	E06F						炙	炒	炯	烱	炬	炸	炳	炮	烟	烋	烝

	Shift JIS	0	1	2	3	4	5	6	7	8	9	A	B	C	D	E	F
火	E080	烙	焉	烽	焜	焙	煥	煕	熙	煦	煢	煌	煖	煬	熏	燻	熄
	E090	熕	熨	熬	燗	熹	熾	燒	燉	燔	燎	燠	燬	燧	燵	燼	
	E09E		燹	燿	爍	爐	爛	爨									
爪	E09E								爭	爬	爰	爲					
爻	E09E												爻	爼			
爿	E09E														爿	牀	牆
	E0AE	牋	牘														
牛	E0AE			牴	牾	犂	犁	犇	犒	犖	犢	犧					
犬	E0AE												犹	犲	狃	狆	狄
	E0BE	狎	狒	狢	狠	狡	狹	狷	倏	猗	猊	猜	猖	猝	猴	猯	猩
	E0CE	猥	猾	獎	獏	默	獗	獪	獨	獰	獸	獵	獻	獺			
王	E0CE														珈	玳	珎
	E0DE	玻	珀	珥	珮	珞	璢	琅	瑯	琥	珸	琲	琺	瑕	琿	瑟	瑙
	E0EE	瑁	瑜	瑩	瑰	瑣	瑪	瑶	瑾	璋	璞	璧	瓊	瓏	瓔	珱	
瓜	E13F		瓠	瓣													
瓦	E13F				瓩	瓰	瓮	瓲	瓰	瓱	瓸	瓷	甄	甃	甌	甎	
	E14F	甍	甕	甓													
甘	E14F				甞												
生	E14F					甦											
用	E14F						甬										
田	E14F							畀	畄	畋	畊	畉	畛	畝	畚	畩	畤
	E15F	畧	畫	畭	畸	當	疆	疇	畴	疊	疊	疊					
疒	E15F												疔	疚	疝	疥	疣
	E16F	痂	疳	痃	疵	疽	疸	疼	疱	痍	痊	痒	痙	痣	痞	痾	痿
	E180	痼	瘁	痰	痺	痲	痳	瘋	瘍	瘉	瘟	瘧	瘠	瘡	瘢	瘤	瘴
	E190	瘻	瘺	瘤	瘼	瘣	瘧	瘧	癡	瘻	瘧	癩	癪	癧	癬	癰	
	E19E		癲														
癶	E19E			癶	癸	發											
白	E19E						皀	皃	皈	皋	皎	皖	皓	皙	皚		
皮	E19E															皰	皺
	E1AE	皸	皹	皺													
皿	E1AE				盂	盍	盖	盒	盞	盡	盥	盧	盪	蘯			
目	E1AE														盼	眈	眇
	E1BE	眄	眩	眤	眞	眥	眦	眛	眷	眸	睇	睚	睨	睫	睛	睥	睿

	Shift JIS	0	1	2	3	4	5	6	7	8	9	A	B	C	D	E	F
目	E1CE	睾	睹	瞎	瞋	瞑	瞠	瞞	瞰	瞶	瞹	瞿	瞼	瞽	瞻	矇	矍
	E1DE	矗	矚														
矛	E1DE			矜													
矢	E1DE				矣	矮											
石	E1DE						矼	砌	砒	礦	砠	礪	硅	碎	硴	碆	硼
	E1EE	碚	碌	碣	碵	碪	碯	磑	磐	磋	磔	碾	碼	磅	磊	磬	
	E23F		磧	磚	磽	磴	礇	礒	礑	礙	礬	礫					
示	E23F												祀	祠	祇	祟	祚
	E24F	祕	祓	祺	祿	禊	禝	禧	齋	禪	禮	禳					
禺	E24F												禹	禺			
禾	E24F														秉	秕	秧
	E25F	秬	秡	秣	稈	稍	稘	稙	稠	稟	禀	稱	稻	稾	稷	穃	穗
	E26F	穉	穡	穢	穩	龝	穰										
穴	E26F							穹	穽	窈	窗	窕	窘	窖	窩	竈	窰
	E280	窶	竅	竄	窿	邃	竇	竊									
立	E280								竝	竏	竚	竓	站	竚	竝	竡	竢
	E290	竦	竭	竰													
竹	E290				笂	笏	笊	笆	笳	笘	笙	笞	笵	笨	笶	筐	
	E29E		筐	笄	筍	箏	箋	筅	筵	筥	筴	筧	筰	筱	筬	筮	箝
	E2AE	箘	箟	箍	箜	箚	箋	箒	箏	箏	箙	箧	篁	篌	篏	箴	篆
	E2BE	篝	篩	簑	簔	篦	篥	籠	簀	簇	簓	篳	篷	簗	簍	篤	簀
	E2CE	簧	簪	篭	簷	簫	簽	籌	籃	籔	簇	籀	籐	籘	籟	籤	籖
	E2DE	籥	籬														
米	E2DE			粁	粃	粐	粤	粭	粢	粫	粡	粨	粳	粲	粱	粮	粹
	E2EE	粽	糀	糅	糂	糘	糒	糜	糢	鬻	糯	糲	糴	糶			
糸	E2EE														糺	紆	
	E33F		紂	紜	紕	紊	紬	紘	紮	紲	紿	紵	絆	絳	絖	絎	絲
	E34F	絨	絮	絏	絣	經	綉	絛	綏	絽	綛	綺	綮	綣	綵	緇	綽
	E35F	綫	總	綢	綯	緜	綸	綟	綰	緘	緝	緤	緞	緻	緲	緡	縅
	E36F	縊	縣	縡	縒	縱	縟	縉	縋	縢	繆	繦	縻	縵	縹	繃	縷
	E380	縲	縺	繧	繝	繖	繞	繙	繚	繹	繪	繩	繼	繻	纃	續	
	E390	瓣	繿	纈	續	纎	纏	纈	纓	纔	纖	纖	纛	纜			
缶	E390														缸	缺	
	E39E		罅	罌	罍	罐	罐										

	Shift JIS	0	1	2	3	4	5	6	7	8	9	A	B	C	D	E	F
网	E39E							网	罕	罔	罘	罟	罠	罨	罩	罪	罰
	E3AE	羂	羆	羃	羈	羇											
羊	E3AE						羌	羔	羞	羝	羚	羣	羯	羲	羹	羮	羶
	E3BE	羸	譱														
羽	E3BE			翅	翠	翊	翕	翔	翡	翦	翩	翳	翹	飜			
老	E3BE														耆	耄	耋
耒	E3CE	耒	耘	耙	耜	耡	耨										
耳	E3CE							耿	耻	聊	聆	聒	聘	聚	聟	聢	聯
	E3DE	聳	聲	聰	聶	聹	聽										
聿	E3DE							聿	肄	肆	肅						
肉	E3DE											肛	肓	肚	肭	冐	肬
	E3EE	胛	胥	胙	胝	胄	胚	胖	脉	胯	胱	脛	脩	脣	脯	腋	
	E43F		隋	腆	脾	腓	腑	胼	腱	腮	腥	腦	腴	膃	膈	膊	膀
	E44F	膂	膠	膕	膣	腟	膣	腸	膩	膰	膵	膾	膸	膽	臀	臂	膺
	E45F	臉	臍	臑	臙	臘	臈	臚	臟	臠							
臣	E45F										臧						
至	E45F											臺	臻				
臼	E45F													與	舁	舂	舅
	E46F	與	舊														
舌	E46F			舍	舐	舗											
舟	E46F						舩	舫	舸	舳	艀	艙	艘	艝	艚	艟	艤
	E480	艢	艨	艪	艫	舮											
艮	E480						艱										
色	E480							艷									
艸	E480								艸	艾	芍	芒	芫	芟	芬	芡	
	E490	芭	芬	苡	苴	苻	苺	莓	范	苻	苹	苞	茆	苜	茉	苙	
	E49E		茵	茴	茖	茲	茱	荀	茹	荐	荅	茯	茫	茗	茘	莅	莚
	E4AE	莪	莟	莢	莖	茣	莎	莇	莊	荼	莵	荳	荵	莠	莉	莨	菴
	E4BE	萓	菫	菎	菽	萃	菘	萋	菁	菷	萇	菠	菲	萍	萢	萠	莽
	E4CE	萸	蔆	菻	葭	萪	萼	蕚	蒄	葷	葫	蒭	葮	蒂	葩	葆	萬
	E4DE	葯	葹	萬	蓊	葢	蒹	蒿	蒟	蓙	蓍	蒻	蓚	蓐	蓁	蓆	蓖
	E4EE	蒙	蔡	蓿	蔣	蔗	蔘	蔬	蔟	蔕	蔔	蓼	蕀	蕣	蕘	蕈	
	E53F		蕁	蘂	蕋	蕕	薀	薤	薈	薑	薊	薨	蕭	薔	薛	藪	薇
	E54F	薜	蕷	蕾	薐	藉	薺	藏	薹	藐	藕	藝	藥	藜	藹	蘊	蘓

	Shift JIS	0	1	2	3	4	5	6	7	8	9	A	B	C	D	E	F
艸	E55F	蘋	藾	藺	蘆	蘢	蘚	蘰	蘿								
虍	E55F									虍	乕	虔	號	虧			
虫	E55F														虱	蚓	蚣
	E56F	蚩	蚪	蚋	蚌	蚶	蚯	蛄	蛆	蚰	蛉	蠣	蚫	蛔	蛞	蛩	蛬
	E580	蛟	蛛	蛯	蜒	蜆	蜈	蜀	蜃	蛻	蜑	蜉	蜍	蛹	蜊	蜴	蜿
	E590	蜷	蜻	蜥	蜩	蜚	蝠	蝟	蝸	蝌	蝎	蝴	蝗	蝨	蝮	蝙	
	E59E		蝓	蝣	蝪	蠅	螢	螟	螂	螯	蟋	螽	蟀	蟐	雖	螫	蟄
	E5AE	螳	蟇	蟆	螻	蟯	蟲	蟠	蠏	蠍	蟾	蟶	蟷	蠎	蟒	蠑	蠖
	E5BE	蠕	蠢	蠡	蠱	蠶	蠹	蠧	蠻								
血	E5BE									衄	衂						
行	E5BE											衒	衙	衞	衢		
衣	E5BE															衫	袁
	E5CE	衾	袞	衵	衽	袵	衲	袂	袗	袒	袮	袙	袢	袍	袤	袰	袿
	E5DE	袱	裃	裄	裔	裘	裙	裝	裏	裝	裟	裳	裨	裏	裏	裏	裏
	E5EE	裏	裏	裏	裏	裏	裏	裏	裏	裏	裏	裏	裏	裏	裏	裏	
	E63F		襦	襤	襭	襪	襯	襴	襷								
襾	E63F									襾	覃	覈	覊				
見	E63F													覓	覘	覡	覩
	E64F	覦	覬	覯	覲	覺	覽	覿	觀								
角	E64F									觚	觜	觝	觧	觴	觸		
言	E64F															訃	訖
	E65F	訐	訌	訛	訝	訥	訶	詁	詛	詒	詆	詈	詼	詭	詬	詢	誅
	E66F	誅	誅	誨	誡	誑	誥	誦	誚	誣	諄	諍	諂	諚	諫	諳	諧
	E680	諤	諱	謔	諠	諢	諷	諞	諛	謌	謇	謚	謐	謗	謐	謗	謠
	E690	謳	鞫	謦	謫	謾	謨	譁	譌	譏	譎	證	譖	譖	譚	譫	
	E69E		譟	譬	譯	譴	譽	讀	讌	讎	讒	讓	讖	讙	讚		
谷	E69E															谺	豁
	E6AE	谿															
豆	E6AE		豈	豌	豎	豐											
豕	E6AE						豕	豢	豬								
豸	E6AE									豸	豺	貂	貉	貅	貊	貍	貌
	E6BE	貌	貔	貘													
貝	E6BE				貶	貭	貪	貽	貲	貳	貳	貶	賈	賈	賤	賣	賚
	E6CE	賽	賺	賻	贄	贅	贊	贐	贏	贍	贐	齎	贓	賍	贔	贖	

	Shift JIS	0	1	2	3	4	5	6	7	8	9	A	B	C	D	E	F
赤	E6CE																赧
	E6DE	赭															
走	E6DE		赱	赳	趁	趙											
足	E6DE						跂	趾	趺	跏	跚	跖	跌	跛	跋	跪	跫
	E6EE	跟	跣	跼	跡	跫	跬	跟	跟	踐	踟	蹂	踵	踰	踴	蹊	
	E73F		蹇	蹉	蹌	蹐	蹈	蹙	蹤	蹠	蹤	蹣	蹕	蹶	蹲	蹼	躁
	E74F	躇	躅	躄	躋	躊	躓	躑	躔	躙	躪	躡					
身	E74F												躬	躰	體	躾	躾
	E75F	軅	軈														
車	E75F			軋	軛	軣	軼	軻	軫	軾	較	軲	輕	輒	輙	輓	輜
	E76F	輟	輛	輌	輦	輳	輻	輹	轅	轂	輾	轌	轉	轆	轎	轗	轜
	E780	轢	轣	轤													
辛	E780				辜	辟	辣	辭	辯								
辷	E780									辷	迚	迥	迢	迪	迯	邇	迴
	E790	逅	迹	迺	逑	逕	逡	逍	逞	逖	逋	逧	逶	逵	逵	迸	
	E79E		遏	遐	遑	遒	逎	遉	逾	遖	遘	遞	遨	遯	遶	隨	遲
	E7AE	邂	遽	邁	邀	邊	邉	邏									
邑	E7AE								邨	邯	邱	邵	郢	郤	扈	郛	鄂
	E7BE	鄒	鄙	鄲	鄰												
酉	E7BE					酊	酖	酘	酣	酥	酩	酳	酲	醋	醉	醂	醢
	E7CE	醫	醯	醪	醵	醴	醺	釀	釁								
采	E7CE									釉	釋						
里	E7CE											釐					
金	E7CE												釖	釟	釜	釛	釼
	E7DE	釵	釶	鈞	釿	鈔	鈬	鈕	鈑	鉞	鉗	鉅	鉉	鉤	鉈	銕	鈿
	E7EE	鉋	鉐	銜	銖	銓	銛	鉚	鋏	銹	銷	鋩	錏	鋺	鍄	錮	
	E83F		錙	錢	錚	錣	錺	錵	錻	鍜	鍠	鍼	鍮	鍖	鎰	鎬	鎭
	E84F	鎔	鏹	鏗	鏘	鑿	鏥	鏘	鏃	鏝	鏐	鏈	鏤	鐚	鐔	鐓	鐃
	E85F	鐇	鐐	鐶	鐫	鐵	鐵	鐺	鑁	鑒	鑄	鑛	鑠	鑢	鑞	鑪	鈩
	E86F	鑰	鑵	鑷	鑽	鑚	鑼	鑾	钁	鑿							
門	E86F										閂	閇	閊	閔	閖	閘	閙
	E880	閏	閨	閧	閭	閼	閻	閹	閾	闊	濶	闃	闍	闌	闕	闔	闖
	E890	關	闡	闥	闢												
阜	E890					阡	阨	阮	阯	陂	陌	陏	陋	陷	陜	陞	

	Shift JIS	0	1	2	3	4	5	6	7	8	9	A	B	C	D	E	F
阜	E89E		陜	陟	陦	陲	陬	隍	隘	隕	隗	險	隧	隱	隲	隰	隴
隶	E8AE	隶	隸														
隹	E8AE			隹	雎	雋	雉	雍	襍	雜	霍	雕					
雨	E8AE												雹	霄	雯	雰	霓
	E8BE	靈	靄	靠	霖	霙	霤	霪	霰	霹	霽	霾	靄	靆	靈	靂	靉
青	E8CE	靜															
非	E8CE		靠														
面	E8CE			靤	靦	靨											
革	E8CE						勒	靫	靱	靷	鞅	靼	鞁	靺	鞆	鞋	鞏
	E8DE	鞐	鞜	鞨	鞦	鞣	鞳	鞴	韃	韆	韈						
韋	E8DE											韋	韜				
韭	E8DE													韭	齏	韲	
音	E8DE																竟
	E8EE	韶	韵														
頁	E8EE			頏	頌	頸	頤	頡	頷	頽	顆	顏	顋	顫	顯	顰	
	E93F		顱	顴	顳												
風	E93F					颪	颯	颱	颶	飄	飃	飆					
食	E93F												飩	飫	餃	餉	餒
	E94F	餔	餘	餡	餝	餞	餤	餠	餬	餮	餽	餾	饂	饉	饅	饐	饋
	E95F	饑	饒	饌	饗												
首	E95F					馗	馘										
香	E95F							馥									
馬	E95F								馭	馮	馼	駟	馼	駝	駘	駑	駭
	E96F	駮	駱	駲	駻	駸	騁	騏	騅	駢	騙	騫	騷	驅	驂	驀	驃
	E980	騾	驕	驍	驛	驗	驟	驢	驥	驤	驩	驫	驪				
骨	E980													骭	骼	髀	髏
	E990	髏	髑	髓	體												
高	E990					髞											
髟	E990						髟	髣	髴	髷	髻	鬆	髮	髯	髱	髷	
	E99E		髻	鬆	鬘	鬚	鬟	鬢	鬣								
鬥	E99E									鬥	鬧	鬨	鬩	鬪	鬮		
鬯	E99E															鬯	
鬲	E99E																鬲
鬼	E9AE	魄	魃	魏	魍	魎	魑	魘									

	Shift JIS	0	1	2	3	4	5	6	7	8	9	A	B	C	D	E	F
魚	E9AE								魴	鮓	鮃	鮑	鮖	鮗	鮟	鮠	鮨
	E9BE	鮴	鯀	鯊	鮹	鯆	鯏	鯑	鯒	鰨	鰯	鰈	鰻	鯡	鰺	鯲	鯱
	E9CE	鯰	鰕	鰔	鰉	鰓	鰌	鰆	鰈	鰒	鰊	鰄	鰮	鰛	鰥	鰤	鰡
	E9DE	鰰	鱇	鰳	鱈	鰹	鰲	鰾	鱉	鱶	鱸						
鳥	E9DE											鳬	鳧	鳰	鴉	鴈	
	E9EE	鳳	鴃	鴆	鴦	鶯	鴣	鴟	鵄	鴕	鴒	鵁	鴿	鴾	鵆	鵈	
	EA3F		鵝	鵞	鵤	鵑	鵐	鵙	鵲	鶉	鶇	鶫	鵯	鵺	鶲	鶴	鶯
	EA4F	鶲	鷄	鷁	鶻	鶸	鶺	鷆	鷏	鷂	鷙	鷓	鷸	鷦	鷭	鷯	鷽
	EA5F	鸚	鶴	鸞													
鹵	EA5F				鹵	鹹	鹽										
鹿	EA5F							麁	麈	麋	麌	麒	麕	麑	麝		
麥	EA5F															麥	麩
	EA6F	麸	麪	麭													
麻	EA6F				靡												
黄	EA6F					黌											
黍	EA6F						黎	黏	黐								
黑	EA6F									黔	黜	點	黝	黠	黥	黨	黯
	EA80	黴	黶	黷													
黹	EA80				黹	黻	黼										
黽	EA80							黽	鼇	鼈							
鼓	EA80										皷	鼕					
鼠	EA80												鼡	鼬			
鼻	EA80														鼾		
齊	EA80															齊	
齒	EA80																齒
	EA90	齔	齣	齟	齠	齡	齦	齧	齬	齪	齷	齲	齶				
龍	EA90													龕			
龜	EA90														龜		
龠	EA90															龠	

[ESC+BV] MaxiCode (Compatible command)

Hexadecimal code	ESC	BV	Parameter
	<1B>$_{16}$	<42>$_{16}$<56>$_{16}$	a,b,c,ddddddddd,eee,fff,n...n
Initial value	None		

Valid range and term of command	When the power is OFF	The set parameter is not maintained.
	Valid range within items	The set parameter becomes invalid.
	Valid range between items	The set parameter becomes invalid.

[Function]

Specifying MaxiCode.

[Format]

<BV>a,b,c,ddddddddd,eee,fff,n...n

- Parameter

  a [Symbol number] = Valid Range : 1 to 8
  b [Number of symbol digit] = Valid Range : 1 to 8
  c [Mode]
  2 : Transportation only
  3 : Transportation only
  4 : Standard symbol
  6 : Reader programing
  d [Postal code] = Valid Range : 0 to 999999999 (Mode 2)
  000000 to 999999 (Mode 3)
  * Mode 2: Max 9 digits (Numeric only)
  * Mode 3: Fixed 6 digits (Capital alphabet)
  e [Country code] = Valid Range : 001 to 999
  f [Service class] = Valid Range : 001 to 999
  n [Low priority message] = Alphanumeric/Symbol

Mode	Service Class	Country code	Postal code	Maximum print data	
				Numeric only	Alphanumeric
2	Fixed 3 digits (Numeric only)	Fixed 3 digits (Numeric only)	Max. 9 digits	123	84
3			Fixed 6 digits (Alphanumeric)		
4	Omission			138	93
6					

[Coding Example]

<A>
<V>100<H>200**<u><BV>1,1,2,123456789,001,002,SAHTHA</u>**
<Q>2
<Z>

[Supplementary Explanation]

- Size of MaxiCode are not changed by number of data for printing.
- If the parameter other than the description is specified or number of print data does not match, printing is not performed.

- When specifying mode 4 and mode 6, number of print data must be specified over 12. When number of print data is specified less than 11, scanner cannot read printed MaxiCode.

[Precautions during use]

- This is the command of the old specification. Recommend the use of <2D20>.

MaxiCode Code table

					S				I				S				0			
				B8	0	0	0	0	0	0	0	0	1	1	1	1	1	1	1	1
				B7	0	0	0	0	1	1	1	1	0	0	0	0	1	1	1	1
				B6	0	0	1	1	0	0	1	1	0	0	1	1	0	0	1	1
				B5	0	1	0	1	0	1	0	1	0	1	0	1	0	1	0	1
B4	B3	B2	B1		0	1	2	3	4	5	6	7	8	9	A	B	C	D	E	F
0	0	0	0	0			SP	0	@	P	`	p								
0	0	0	1	1			!	1	A	Q	a	q								
0	0	1	0	2			″	2	B	R	b	r								
0	0	1	1	3			#	3	C	S	c	s								
0	1	0	0	4			$	4	D	T	d	t								
0	1	0	1	5			%	5	E	U	e	u								
0	1	1	0	6			&	6	F	V	f	v								
0	1	1	1	7			’	7	G	W	g	w								
1	0	0	0	8			(	8	H	X	h	x								
1	0	0	1	9			)	9	I	Y	i	y								
1	0	1	0	A			*	:	J	Z	j	z								
1	0	1	1	B			+	;	K	[	k	{								
1	1	0	0	C			,	<	L	¥	l	|								
1	1	0	1	D			−	=	M	]	m	}								
1	1	1	0	E			.	>	N	^	n	~								
1	1	1	1	F			/	?	O	_	o	DEL								

[01H to FFH] can be available for MaxiCode.

[ESC+BK] PDF417 (Compatible command)

Hexadecimal code	ESC	BK	Parameter
	<1B>$_{16}$	<42>$_{16}$<4B>$_{16}$	aabbcddeeffffg...g(,h)
Initial value	None		

Valid range and term of command	When the power is OFF	The set parameter is not maintained.
	Valid range within items	The set parameter becomes invalid.
	Valid range between items	The set parameter becomes invalid.

[Function]

Specifying PDF417.

[Format] (Setup part)

<BK>aabbcddeeffffg...g(,h)

- Parameter

  a [Minimum module width] = Valid range : 01 to 27 dots
  b [Minimum module height] = Valid range : 01 to 72 dots
  c [Security level] = Valid range : 0 to 8
  d [Number of data code words per digit]
  Valid range : 01 to 30
  00 : Automatic (Width varies depending on the number of data specified)
  e [Digit number per symbol]
  Valid range : 03 to 90
  00 : Automatic (Height varies depending on the number of data specified)
  f [Digit number of data] = Valid data : 0001 to 2681
  g [Print data] = Data
  h [PDF code type]
  When omitted : PDF417
  T : Truncated scale
  M : Micro PDF

[Coding Example]

Minimum module width: 03 dots, Minimum module height: 09 dots, Security level: 3, Number of data code words per line: 03, Number of line per symbol: 18

<A>
<V>100<H>200**<BK>0309303180010PDF1234567**
<Q>2
<Z>

[Supplementary Explanation]

- Minimum module width can be set to 01 and 02; the read, this may not be read properly.
- Minimum module height can be set to 01, 02 and 03; the read, this may not be read properly.
- When d=e=00, aspect ratio will be at 1:2 based on the number of print data.
- When specifying security level high, parameter d or e should have large number.
- Maximum number of digit of data is 2681, but it varies depending on Minimum module size, Security level and type of print data.
- When parameter d and e does not match number of data, print may not be performed properly.

- When Micro PDF is specified by PDF type, number per symbol is specified by number of data codeword per line, and accordingly maximum number of data digit is specified. For details, refer to "Symbol size and number of data of MicroPDF417" below.
- When specifying Micro PDF by PDF code type, security level is disabled.

[Points]

- Sequential number is not available.
- Specifying print position by automatic line feed is not available.
- Print 00H to FFH is available.
- Format registration is available.
- Enlarging minimum module size improves print quality.
- Increasing security level improves read rate.
- Print height varies depending on the character such as numeric only, alphabet only or mixture of numeric and alphabets.

[Notes]

- This is the command of the old specification. Recommend the use of <2D10>.

Note: Symbol size of Micro PDF417 has 34 types and shown in the table below.

Micro PDF417 – symbol size and number of data

Symbol size		Maximum number of data		
Cols (c)	**Rows (d)**	**Alphabet (A-Z)**	**Numeric only**	**Binary mode**
1	11	6	8	3
	14	12	17	7
	17	18	26	10
	20	22	32	13
	24	30	44	18
	28	38	55	22
2	8	14	20	8
	11	24	35	14
	14	36	52	21
	17	46	67	27
	20	56	82	33
	23	64	93	38
	26	72	105	43
3	6	10	14	6
	8	18	26	10
	10	26	38	15
	12	34	49	20
	15	46	67	27
	20	66	96	39
	26	90	132	54
	32	114	167	68
	38	138	202	82
	44	162	237	97
4	4	14	20	8
	6	22	32	13
	8	34	49	20
	10	46	67	27
	12	58	85	34
	15	76	111	45
	20	106	155	63
	26	142	208	85
	32	178	261	106
	38	214	313	128
	44	250	366	150

Mix of Alphabet (Capital letter, small letter), Numeric and Control code varies depending on number of combined characters.

PDF417 Code table

					S				I				S				O			
				B8	0	0	0	0	0	0	0	0	1	1	1	1	1	1	1	1
				B7	0	0	0	0	1	1	1	1	0	0	0	0	1	1	1	1
				B6	0	0	1	1	0	0	1	1	0	0	1	1	0	0	1	1
				B5	0	1	0	1	0	1	0	1	0	1	0	1	0	1	0	1
B4	B3	B2	B1		0	1	2	3	4	5	6	7	8	9	A	B	C	D	E	F
0	0	0	0	0			SP	0	@	P	`	p								
0	0	0	1	1			!	1	A	Q	a	q								
0	0	1	0	2			″	2	B	R	b	r								
0	0	1	1	3			#	3	C	S	c	s								
0	1	0	0	4			$	4	D	T	d	t								
0	1	0	1	5			%	5	E	U	e	u								
0	1	1	0	6			&	6	F	V	f	v								
0	1	1	1	7			’	7	G	W	g	w								
1	0	0	0	8			(	8	H	X	h	x								
1	0	0	1	9			)	9	I	Y	i	y								
1	0	1	0	A			*	:	J	Z	j	z								
1	0	1	1	B			+	;	K	[	k	{								
1	1	0	0	C			,	<	L	¥	l	|								
1	1	0	1	D			-	=	M	]	m	}								
1	1	1	0	E			.	>	N	^	n	~								
1	1	1	1	F			/	?	O	_	o	DEL								

PDF417 can specify from 00H to FFH.

[ESC+BX] DataMatrix (ECC200) (Compatible command)

Hexadecimal code	ESC	BX	Parameter
	<1B>$_{16}$	<42>$_{16}$<58>$_{16}$	aabbccddeeefffghh
Initial value	None		

Valid range and term of command	When the power is OFF	The set parameter is not maintained.
	Valid range within items	The set parameter becomes invalid.
	Valid range between items	The set parameter becomes invalid.

[Function]

Specifying DataMatrix Code (ECC200).

[Format] (Setup part)

<BX>aabbccddeeefffghh

- Parameter

  a [Format ID]
  Valid Range : 01 (Fixed)
  b [Error correction level]
  Valid Range : 20 (Fixed)
  c [Cell width]
  Valid Range : 01 to 99 (dot per cell)
  d [Cell pitch]
  Valid Range : 01 to 99 (dot per cell)
  e [Number of cells per line]
  Valid Range : 010 to 144
  000 : (Auto setup)
  f [Number of cell lines]
  Valid Range : 008 to 414
  000 : (Auto setup)
  g [Mirror image]
  Valid Range : 0 (Fixed)
  h [Size of guide cell]
  Valid Range : 01 (Fixed)

[Supplementary Explanation]

- 01 and 02 are designable for [Cell width] and [Cell Pitch]; however, they may not be read properly. In this case, 00 will be an error.
- If 000 is specified for both [Number of cells per line] and [Number of cell lines], optimum matrix size is set automatically based on the Number of data.

[Notes]

- This is the command of the old specification. Recommend the use of <2D50>.

[ESC+DC] DataMatrix (ECC200) Data Specify (Compatible command)

Hexadecimal code	ESC	DC	Parameter
	<1B>$_{16}$	<44>$_{16}$<43>$_{16}$	n...n
Initial value	None		

Valid range and term of command	When the power is OFF	The set parameter is not maintained.
	Valid range within items	The set parameter becomes invalid.
	Valid range between items	The set parameter becomes invalid.

[Function]

Specifying data for DataMatrix (ECC200).

[Format] (Setup part)

<DC>n...n

- Parameter

  n [Print data] = Data

[Coding Example]

Cell width: 02, Cell pitch: 02, Number of cells per line: 000 (Auto setup), Number of cell lines: 000 (Auto setup), Print data: 1234567890

<A>
<V>100<H>200
<BX>01200202000000001
<u><DC>1234567890</u>
<Q>2
<Z>

[Supplementary Explanation]

- DataMatrix (ECC200) can specify from 00H to FFH. Note that 05H, 10H, 11H, 12H, 18H, 1BH cannot be specified because they are printer control codes. When specifying control code for data, use DataMatrix <2D50>.

	Data format	Number of data
Data format	Numeric	3116
	Alphanumeric	2335
	Binary (00H to FFH)	1556

* Value in above table shows the maximum number of data that can be specified as barcode data.

[Notes]

- This is the command of the old specification. Recommend the use of <2D50>.

[ESC+FX] DataMatrix (ECC200) Sequential Number (Compatible command)

Hexadecimal code	ESC	FX	Parameter
	<1B>$_{16}$	<46>$_{16}$<58>$_{16}$	aaabcccdddeee
Initial value	None		

Valid range and term of command	When the power is OFF	The set parameter is not maintained.
	Valid range within items	The set parameter becomes invalid.
	Valid range between items	The set parameter becomes invalid.

[Function]

Specifying sequential number for DataMatrix (ECC200).

[Format] (Sequential number part)

<FX>aaabcccdddeee

- Parameter

  a [Number of duplication to print]
  Valid Range : 001 to 999
  b [Flag of increase and decrease]
  + : Increment
  - : Decrement
  c [Number of increase and decrease]
  Valid Range : 001 to 999
  d [Specification of digit position]
  Valid Range : 001 to 999
  e [Number of digit]
  Valid Range : 001 to 999

[Coding Example]

Number of duplication to print: 001, Flag of increase and decrease: +, Number of increase and decrease: 001, Digit position: 005, Number of digit: 003

<A>
<V>100<H>200
<u><FX>001+001005003</u>
<BX>01100202000000001
<DC>00006000
<Q>2
<Z>

[Notes]

- This is the command of the old specification. Recommend the use of <2D50>.

GS1 DataMatrix (ECC200) Code table (<DC>)

					S				I				S				O			
				B8	0	0	0	0	0	0	0	0	1	1	1	1	1	1	1	1
				B7	0	0	0	0	1	1	1	1	0	0	0	0	1	1	1	1
				B6	0	0	1	1	0	0	1	1	0	0	1	1	0	0	1	1
				B5	0	1	0	1	0	1	0	1	0	1	0	1	0	1	0	1
B4	B3	B2	B1		0	1	2	3	4	5	6	7	8	9	A	B	C	D	E	F
0	0	0	0	0			SP	0	@	P	`	p								
0	0	0	1	1			!	1	A	Q	a	q								
0	0	1	0	2			″	2	B	R	b	r								
0	0	1	1	3			#	3	C	S	c	s								
0	1	0	0	4			$	4	D	T	d	t								
0	1	0	1	5			%	5	E	U	e	u								
0	1	1	0	6			&	6	F	V	f	v								
0	1	1	1	7			’	7	G	W	g	w								
1	0	0	0	8			(	8	H	X	h	x								
1	0	0	1	9			)	9	I	Y	i	y								
1	0	1	0	A			*	:	J	Z	j	z								
1	0	1	1	B			+	;	K	[	k	{								
1	1	0	0	C			,	<	L	¥	l	|								
1	1	0	1	D			-	=	M	]	m	}								
1	1	1	0	E			.	>	N	^	n	~								
1	1	1	1	F			/	?	O	_	o	DEL								

[00H to FFH] can be available for GS1 DataMatrix (ECC200).

(Note that 05H, 10H, 11H, 18H, 1BH cannot be specified because they are printer control codes.)

When specifying 7EH, specify “7EH, 7EH.”

[ESC+QV] QR code version

Hexadecimal code	ESC	QV	Parameter
	<1B>$_{16}$	<51>$_{16}$<56>$_{16}$	aa
Initial value	aa=00		

Valid range and term of command	When the power is OFF	The set parameter is not maintained.
	Valid range within items	The set command is valid until the next specification is made.
	Valid range between items	The set parameter becomes initial value at the next item <A>.

[Function]

Specifying any QR code version can print the code with fixed cell size.

When not specified, it becomes the auto setting.

[Format]

<QV>aa

- Parameter

  a [Version number]
  Valid range : 00 to 40
  (Specifying this range does not become a parameter error.
  An error may arise for some QR code types, while analyzing the image.)

  Print valid MODE1 : 00 to 14 (00: Auto setting)
  MODE2 : 00 to 40 (00: Auto setting)
  MicroQR : 00 to 04 (M1 to M4) (00: Auto setting)

[Coding Example 1]

MODEL 1, Error correction: H, Cell size font: 05, Manual setting, Normal mode, Version 14

<A>
<V>100<H>100<2D31>,H,05,0,0
<QV>14
<DN>0011,0123456789X
<Q>1
<Z>

[Coding Example 2]

MODEL 2, Error correction: H, Cell size font: 05, Manual setting, Normal mode, Version 35

<A>
<V>100<H>100<2D30>,H,05,0,0
<QV>35
<DN>0011,0123456789X
<Q>1
<Z>

[Coding Example 3]

MicroQR, Error correction: L, Cell size font: 05, Manual setting, Version M3

<A>
<V>100<H>100<2D32>,L,05,0
<QV>3
<DN>005,01234
<Q>1
<Z>

[Supplementary Explanation]

- MODEL 1: up to 14, MODEL 2 up to 40, MicroQR: up to 4

  The valid parameter range is from 0 to 40 and it varies depending on the QR code type.
- For MicroQR, 1 to 4 correspond with M1 to M4.
- Specifying <QV>0 becomes Auto (Default: Compatible with the existing code).
- Sending the data exceeding the data size of specified version will result in error and QR code is not printed.
- Specify <QV> command between <2Dxx> and <DN>/<DS>.
- It does not affect other than QR code.
- When resulted in a parameter error, it will be handled in the same manner of no specification.

[About the version]

Refer to the specifications of QR code for details.

Refer to the QR code specification for details. Version 1: 21 x 21 cells, Version 2: 25 x 25 cells, …, Version 40: 177 x 177 cells.

For MicroQR, M1 to M4 = 11 x 11 to 17 x 17 cells, smaller than MODEL 1/2.

Graphic Commands

[ESC+G] Graphic Print

Hexadecimal code	ESC	G	Parameter
	<1B>$_{16}$	<47>$_{16}$	aabbbcccn...n
Initial value	None		

Valid range and term of command	When the power is OFF	The set parameter is not maintained.
	Valid range within items	The set parameter becomes invalid.
	Valid range between items	The set parameter becomes invalid.

[Function]

Specifying the print of graphic.

[Format]

<G>abbbcccn...n

- Parameter

  a [Data specification by HEX and BIN]
  H : Hex data
  Specify graphic data as 2 characters of ASCII 0-F which is equal to 8 dots, output it as hex code corresponding to ASCII.
  B : Binary data
  Specify graphic data as one byte of binary which is equal to 8 dots.
  b [Specification of crosswise graphic area per byte]
  Valid range: Refer to [Initial value of parameter and Valid Range] section below.
  c [Specification of lengthwise graphic area per byte]
  Valid range: Refer to [Initial value of parameter and Valid Range] section below.
  n [Graphic data]

[Coding Example 1]

[H: HEX data] is specified for [Data specification by HEX and BIN]

[□] is printed with the below specification.

<A>
<V>50<H>50
<G>H001001FF818181818181FF
<Q>1
<Z>

[Coding Example 2]

[B: Binary data] is specified for [Data specification by HEX and BIN]

[□] is printed with the below specification.

<A>
<V>50<H>50
<G>B001001<FF818181818181FF>$_{16}$

<Q>1
<Z>

[Supplementary Explanation]

- Specification of [B] has shorter program description than that of specification [H]; and, transfer data length is 50 percent shorter. This could be advantage in data capacity.
- Specification of Rotation <%> and Enlargement <L> are available.
- Enlargement <L> should be placed just before Graphic Print <G>.
- When using Rotation <%> and Enlargement <L> commands at the same time, specify <%> command before <L>.
- The crosswise maximum byte and lengthwise maximum byte are specified in [Initial value of parameter and Valid Range] section below, however, it is possible to specify up to 999 bytes to have compatibility with the old model.

  It is possible to print less than 2937600 bytes as the graphic data.
- The calculation of graphic data size is [crosswise maximum byte x lengthwise maximum byte x 8].

[Initial value for parameter and Valid range]

Head density	Maximum byte in horizontal direction	Maximum byte in vertical direction
203 dpi	104	400
305 dpi	156	600
609 dpi	312	999

[ESC+GM] BMP File Print

Hexadecimal code	ESC	GM	Parameter
	<1B>$_{16}$	<47>$_{16}$<4D>$_{16}$	aaaaa,n...n
Initial value	None		

Valid range and term of command	When the power is OFF	The set parameter is not maintained.
	Valid range within items	The set parameter becomes invalid.
	Valid range between items	The set parameter becomes invalid.

[Function]

Specifying the print of BMP file created by such as Image editing application.

[Format]

<GM>aaaaa,n...n

- Parameter

  a [Total bytes of BMP file]
  n [Data]

[Coding Example]

<A>
<V>50<H>50**<GM>04500,<424D00...00>**$_{16}$
<Q>2
<Z>

[Supplementary Explanation]

- Data is sent in binary data (Outputs 8-dot, one byte in binary all at once) (BMP file size = Total byte size, BMP file data = data).
- When [Total bytes of BMP file] is not matching the transfer data, this may become the cause of malfunction.
- Total bytes are the file size displayed at [Property] and such.
- BMP file is available in Black/White mode only. In color mode, printing is not guaranteed.

  Also, this command is not valid for BMP compressed file. Make sure that the file extension is set to [BMP] before printing.
- Rotation <%> and Enlargement <L> are available.
- Enlargement <L> should be placed just before this command.
- When using Rotation <%> and Enlargement <L> at the same time, specify <%> command before <L>.

[ESC+GP] PCX File Print

Hexadecimal code	ESC	GP	Parameter
	<1B>$_{16}$	<47>$_{16}$<50>$_{16}$	aaaaa,n...n
Initial value	None		

Valid range and term of command	When the power is OFF	The set parameter is not maintained.
	Valid range within items	The set parameter becomes invalid.
	Valid range between items	The set parameter becomes invalid.

[Function]

Specifying the print of PCX file created by such as Image editing application.

[Format]

<GP>aaaaa,n...n

- Parameter

  a [Total bytes of PCX file]
  n [Data]

[Coding Example]

<A>
<V>50<H>50**<u><GP>04500,XXXXXXXXXXXX</u>**
<Q>2
<Z>

[Supplementary Explanation]

- Data is sent in binary data (Outputs 8-dot, one byte in binary all at once) (PCX file size = Total byte size, PCX file data = data).
- When [Total bytes of PCX file] is not matching the transfer data, this may become the cause of malfunction.
- Total bytes are the file size displayed at [Property] and such.
- PCX file is available in Black/White mode only. In color mode, printing is not guaranteed.

  Also, this command is not valid for PCX compressed file. Make sure that the file extension is set to [PCX] before printing.
- Rotation <%> and Enlargement <L> are available.
- Enlargement <L> should be placed just before this command.
- When using Rotation <%> and Enlargement <L> at the same time, specify <%> command before <L>.

System Commands

[ESC+CS] Print Speed

Hexadecimal code	ESC	CS	Parameter
	$<1B>_{16}$	$<43>_{16}<53>_{16}$	aa
Initial value	Refer to [Parameter Initial Value and Specified Range] section below.		

Valid range and term of command	When the power is OFF	The set parameter is maintained.
	Valid range within items	The set parameter is valid until the next specification is made.
	Valid range between items	The set parameter is valid until the next specification is made.

[Function]

Specifying the speed of printing.

[Format]

<CS>aa

- Parameter

  a [Print speed] = Refer to [Initial value for parameter and Valid range] section below.

[Coding Example]

<A>
<CS>4
<Z>

[Supplementary Explanation]

- Print speed value specified by the command or "Settings" mode is maintained.

[Points]

- If the value over valid range is specified, command error will occur and print speed will not be changed.
- Use default set operation of this product to set back the value to the initial one.
- If print mode is linerless cutter, the maximum speed would be 6 inches/sec and initial value would be 4 inches/sec. Command error does not occur if 7 inches/sec to maximum for each model has been specified. In that case, the value will not be set.

[Initial value for parameter and Valid range]

<table>
<tr><th>Head density</th><th>Initial value</th><th>Parameter valid range</th><th>Print speed corresponding to parameter</th></tr>
<tr><td>203 dpi</td><td>6</td><td>2, 3, 4, 5, 6, 7, 8, 9, 10, 11, 12, 13, 14</td><td rowspan="3">2: 2 (inch/s) 50.8 (mm/s)
3: 3 (inch/s) 76.2 (mm/s)
4: 4 (inch/s) 101.6 (mm/s)
5: 5 (inch/s) 127.0 (mm/s)
6: 6 (inch/s) 152.4 (mm/s)
7: 7 (inch/s) 177.8 (mm/s)
8: 8 (inch/s) 203.2 (mm/s)
9: 9 (inch/s) 228.6 (mm/s)
10: 10 (inch/s) 254.0 (mm/s)
11: 11(inch/s) 279.4(mm/s)
12: 12(inch/s) 304.8(mm/s)
13: 13(inch/s) 330.2(mm/s)
14: 14(inch/s) 355.6(mm/s)</td></tr>
<tr><td>305 dpi</td><td>6</td><td>2, 3, 4, 5, 6, 7, 8, 9, 10, 11, 12, 13, 14</td></tr>
<tr><td>609 dpi</td><td>4</td><td>2, 3, 4, 5, 6</td></tr>
</table>

[ESC+#F] Print Darkness

Hexadecimal code	ESC	#F	Parameter
	<1B>$_{16}$	<23>$_{16}$<46>$_{16}$	ab or aab
Initial value	Refer to [Print darkness level range] and [Print darkness range] section below.		

Valid range and term of command	When the power is OFF	The set parameter is maintained.
	Valid range within items	The set parameter is valid until the next specification is made.
	Valid range between items	The set parameter is valid until the next specification is made.

[Function]

Specifying print darkness.

[Format]

<#F>ab

<#F>aab

- Parameter

  a [Print darkness level specification]
  1 ↑ Lightest
  2
  3
  4
  5
  6
  7
  8
  9
  10 ↓ Darkest

  b [Print darkness specification]
  A to F (omissible)
  This parameter is usually "A."
  The parameter valid range differs depending on the model.
  Refer to [Print darkness range] section below.

[Coding Example]

<A>
<#F>5A
<Z>

[Supplementary Explanation]

- Print darkness value specified by the command or "Settings" mode is maintained.

[Notes]

- If the value over valid range is specified, command error will occur and print darkness will not be changed.
- Initial value can be set by default setting operation of this product.

[Print darkness level range]

Initial value	Parameter valid range	When setting outside of valid range
5	1, 2, 3, 4, 5, 6, 7, 8, 9, 10	Command error will occur when other values than parameter valid range in the left is specified.

[Print darkness range]

Initial value	Parameter valid range	When setting outside of valid range
A	A	From B to F are reserved. The same darkness as A. Print darkness other than from A to F will be replaced with A. (It will not be a command error.)

[ESC+#E] Print Darkness (Compatible command)

Hexadecimal code	ESC	#E	Parameter
	<1B>$_{16}$	<23>$_{16}$<45>$_{16}$	ab
Initial value	None		

Valid range and term of command	When the power is OFF	The set parameter is maintained.
	Valid range within items	The set parameter is valid until the next specification is made.
	Valid range between items	The set parameter is valid until the next specification is made.

[Function]

Specifying print darkness.

[Format]

<#E>ab

- Parameter

  a [Print darkness level specification]
  1 ↑ Lightest
  2
  3
  4
  5 ↓ Darkest

  b [Print darkness specification]
  A to F (omissible)
  This parameter is usually "A."
  The parameter valid range differs depending on the model.
  Refer to [Print darkness range] section below.

[Coding Example]

<A>
<#E>3A
<Z>

[Supplementary Explanation]

- Print darkness value specified by the command.

[Notes]

- This command is for the compatibility with previous one. The print darkness level obtained by DC2+PB, and the print darkness level on the display screen becomes twice the value set by this command.

[Print darkness level range]

Parameter valid range	When setting outside of valid range
1, 2, 3, 4, 5	Command error will occur when other values than parameter valid range in the left is specified.

[Print darkness range]

Parameter valid range	When setting outside of valid range
A	From B to F are reserved. The same darkness as A. Print darkness other than from A to F will be replaced with A. (It will not be a command error.)

[ESC+A1] Media Size

Hexadecimal code	ESC	A1	Parameter
	$<1B>_{16}$	$<41>_{16}<31>_{16}$	aaaabbbb VaaaaaHbbbb
Initial value	None		

Valid range and term of command	When the power is OFF	The set parameter is not maintained.
	Valid range within items	The set parameter is valid until the next specification is made.
	Valid range between items	The set parameter is valid until the next specification is made.

[Function]

Specifying media size.

[Format]

<A1>aaaabbbb (a, b fixed) *Media size is less than 9999.

<A1>VaaaaaHbbbb (a, b variable)

- Parameter

  a [Height of label] = Valid range : Refer to [Valid Range] section below.
  b [Width of label] = Valid range : Refer to [Valid Range] section below.

[Valid Range]

Head density	Width of label (dots)	Height of label (dots)
203 dpi	1 to 832	1 to 20000
305 dpi	1 to 1248	1 to 18000
609 dpi	1 to 2496	1 to 9600

[Coding Example 1]

Label length: 800 dots, label width: 640 dots

<A>
<A1>08000640
<Z>

[Coding Example 2]

Label length: 800 dots, label width: 640 dots

<A>
<A1>V800H640
<Z>

[Coding Example 3]

Label length: 1200 dots, label width: 40 dots

<A>
<A1>12000040
<Z>

[Coding Example 4]

Label length: 1200 dots, label width: 40 dots

<A>
<A1>V1200H40
<Z>

[Coding Example 5]

Label length: 11200 dots, label width: 240 dots

<A>
<A1>V11200H240
<Z>

[Supplementary Explanation]

- If using the label smaller than the head width, use this command for specifying the media size and adjust the start point position corresponding to the media size.
- For specifying the media size, include the size of backing paper.

(Side alignment, 8 dots/mm)

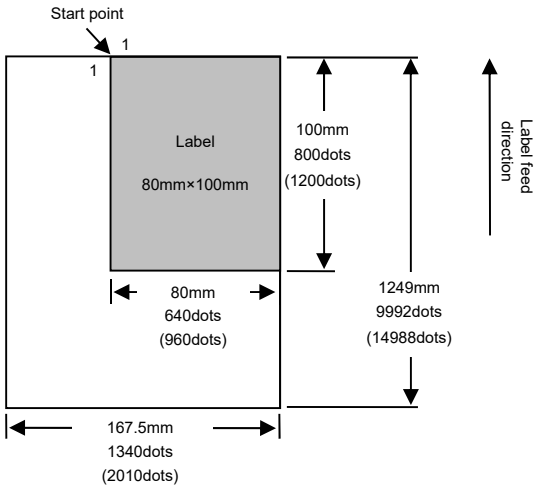

Value inside ( ) is 12 dots/mm

(Center alignment, 8 dots/mm)

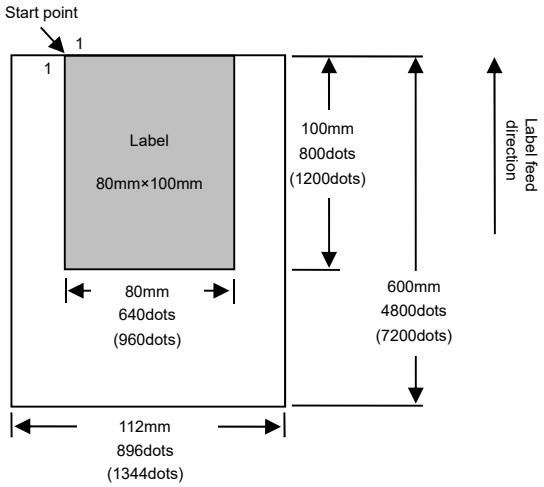

Value inside ( ) is 12 dots/mm

[ESC+A3] Base Reference Point

Hexadecimal code	ESC	A3	Parameter
	<1B>$_{16}$	<41>$_{16}$<33>$_{16}$	VabbbbbHcdddd
Initial value	a=+,b=00000,c=+,d=0000		

Valid range and term of command	When the power is OFF	The set parameter is not maintained. (with the start point correction)
		The set parameter is maintained. (without the start point correction)
	Valid range within items	The set parameter is valid until the next specification is made.
	Valid range between items	The set parameter is valid until the next specification is made.

[Function]

Changing the start point coordinate. This is set in "Settings" mode of this product (normally).

[Format]

<A3>VabbbbbHcdddd

- Parameter

  a [Vertical start point correction sign] = +, -
  b [Vertical start point correction (Number of dots)]
  Refer to [Valid range and saving parameter] section below.
  c [Horizontal start point correction sign] = +, -
  d [Horizontal start point correction (Number of dots)]
  Refer to [Valid range and saving parameter] section below.

[Coding Example]

<A>
<A3>V+10H+10
<Z>

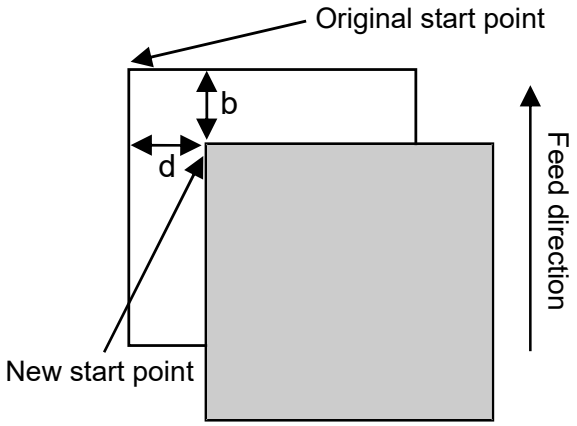

[Supplementary Explanation]

- If changing start point correction and being located outside of printing area, printing may not be performed.

- When changing start point correction through multiple label formats, correction will affect all of the formats.

[Points]

- This command is effective prior to the "Settings" mode settings of this product.
- The offset value specified by Base Reference Point <A3> with the start point correction sign is not saved. Thus, the offset value specified by Base Reference Point <A3> is maintained until the change is made by the next <A3> or the power is off (See [Valid range and saving parameter]).
- The offset value specified by the <A3> command without the sign (+/-) is registered in [Printing] > [Imaging] too. Thus, the offset value specified by Base Reference Point <A3> is maintained even the power is off. However this is a format to be compatible with the older models. Please specify the sign (+/-) in normal operation (See [Valid range and saving parameter]).

[Valid range and saving parameter]

Head density	Horizontal start point correction (dots)	Vertical start point correction (dots)	Saving parameter
203 dpi	-831 to +831	-19999 to +19999	With (+/-) sign: Not saved Without (+/-) sign: Saved*1
305 dpi	-1247 to +1247	-17999 to +17999	
609 dpi	-2495 to +2495	-9599 to +9599	

*1 The setting "without sign" is only applicable to the old model printers. Please specify the sign (+/-) in normal operation.

[ESC+EP] Print End Position

Hexadecimal code	ESC	EP	Parameter
	<1B>$_{16}$	<45>$_{16}$<50>$_{16}$	[,aaaaa]
Initial value	None		

Valid range and term of command	When the power is OFF	The set command is not maintained.
	Valid range within items	The set command becomes invalid.
	Valid range between items	The set command becomes invalid.

[Function]

Specifying the label stop position in the sensor ignored mode.

[Format]

<EP>[,aaaaa]

- Parameter

  a [print stop position] = Refer to [Range of specification] section below.

[Specified Range]

Head density	Height of label (dots)
203 dpi	0 to 20000
305 dpi	0 to 18000
609 dpi	0 to 9600

[Coding Example 1]

```
<A>
<A1>14240832
<Z>
<A>
<V>100<H>200<P>2<L>0202<XS>ABCD
<Q>2
<EP>
<Z>
```

Example) 8 dots/mm, 12 dots/mm

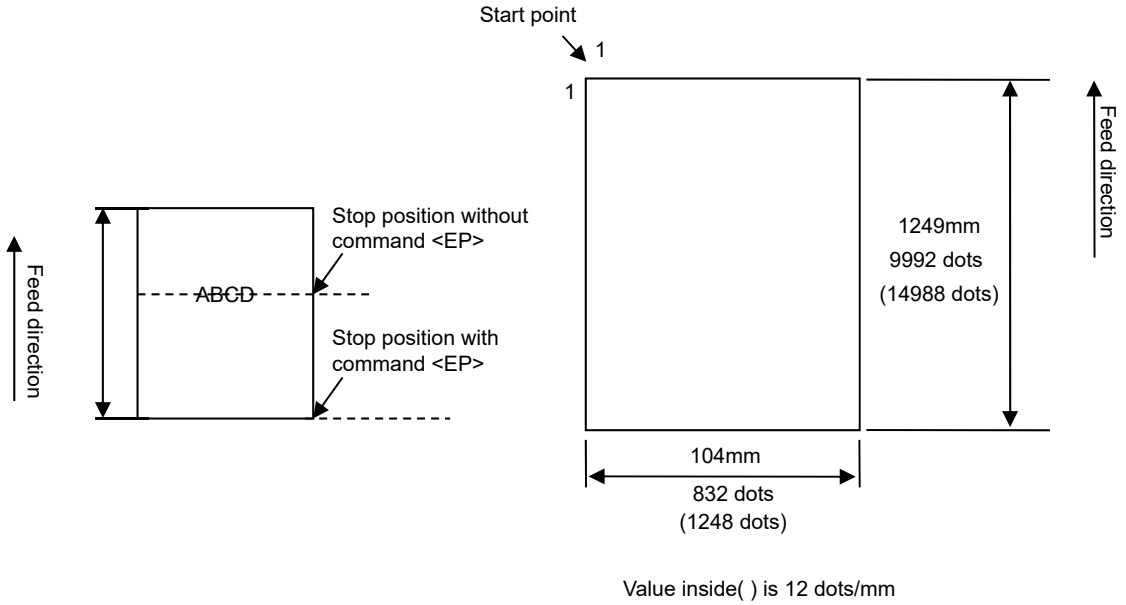

[Coding Example 2]

<A>
<V>100<H>200<P>2<L>0202<XS>ABCD
<Q>2
<EP>,128
<Z>

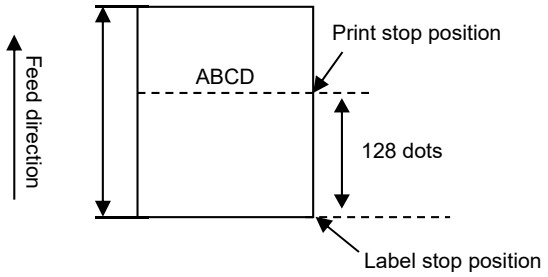

[Supplementary Explanation]

- Use this command in the sensor invalid mode.
- Use this command in combination with Media Size <A1>.
- When you specify the parameter, the last position of printing + value specified in parameter will be the stop position of label.

  However, if last position of printing + position specified in parameter exceeds label length, the size is truncated to label length.
- If you specify Media Size <A1> in Format Registration <YS> and Form Overlay Registration <&S> make sure to specify Print End Position <EP> when you specify Format Call <YR> and Form Overlay Call <&R>.
- The label stop position depends on the following combination. The table below shows which commands will be adopted by the combination of <A1>, <EP> and settings in [Setting] menu.

<A1>	<EP>		Settings in [Settings] menu	Adopted command / Setting	Remarks
	Without parameter	With parameter			
○	○	-	-	<A1>	

<A1>	<EP>		Settings in [Settings] menu	Adopted command / Setting	Remarks
	Without parameter	With parameter			
○	-	○	-	<EP>	
○	-	-	○	LCD (Print End Position)	If you do not specify of the <EP>.
○	○	-	○	<A1>	
○	-	○	○	<EP>	
-	○	-	-	<A1>	<A1> is adopted after power ON, if <A1> has been designated once.
				LCD (Label Length)	Settings in [Setting] menu is adopted after power ON, if <A1> is not specified even once.
-	-	○	-	<EP>	
-	-	-	○	LCD (Print End Position)	If you do not specify of the <EP>.
-	○	-	○	<A1>	<A1> is adopted after power ON, if <A1> has been designated once.
				LCD (Label Length)	Settings in [Setting] menu is adopted after power ON, if <A1> is not specified even once.
-	-	○	○	<EP>	

[ESC+~] Multiple Cut

Hexadecimal code	ESC	~	Parameter
	<1B>$_{16}$	<7E>$_{16}$	aaaa
Initial value	aaaa=1		

Valid range and term of command	When the power is OFF	The set parameter is not maintained.
	Valid range within items	The set parameter is valid until the next specification is made.
	Valid range between items	The set parameter becomes initial value at the next item <A>.

[Function]

Specifies the number of labels to print between each cut.

[Format]

<~>aaaa

- Parameter

  a [Number of prints before cutting] = Valid Range : 0 to 9999

[Coding Example]

```
<A>
<V>100<H>200<P>2<L>0202<XM>ABC
<Q>4
<~>2
<Z>
```

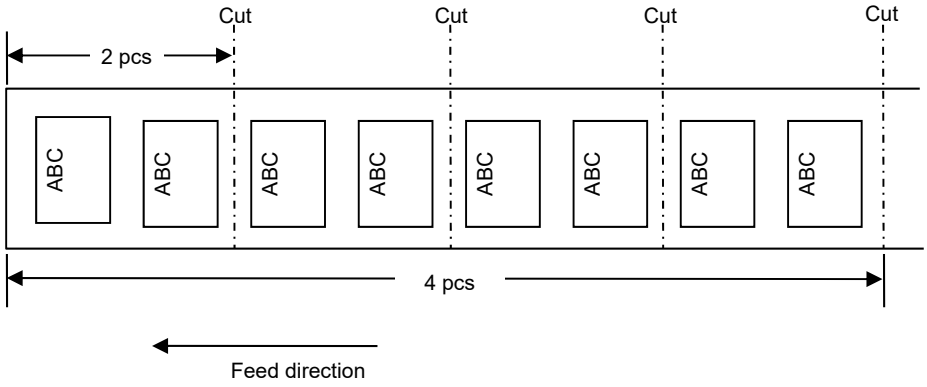

[Supplementary Explanation]

- Valid only for Cutter models.
- If this command is not specified in Cutter mode, each label will be cut off after printed.
- In case the parameter "a" is set to 0, no label will be cut.
- The product of Qty and value of "aaaa" shall not exceed the maximum number "999999."
- This command <~> shall be put after Qty<Q>. <Q>, in this case, is to specify number of sheets to be cut.

[ESC+CT] Cut Number Unit

Hexadecimal code	ESC	CT	Parameter
	<1B>$_{16}$	<43>$_{16}$<54>$_{16}$	aaaa
Initial value	aaaa=1		

Valid range and term of command	When the power is OFF	The set parameter is not maintained.
	Valid range within items	The set parameter is valid until the next specification is made.
	Valid range between items	The set parameter becomes initial value at the next item <A>.

[Function]

Cutting labels at a specified interval in a print job.

[Format]

<CT>aaaa

- Parameter

  a [Number of labels between each cut] = Qty range : 0 to 9999

[Coding Example]

<A>
<V>100<H>200<P>2<L>0202<XM>ABC
<CT>2
<Q>7
<Z>

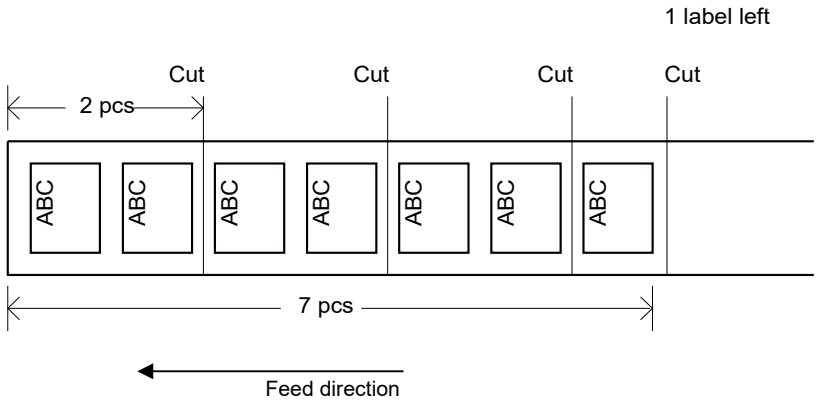

[Supplementary Explanation]

- Valid only for Cutter models.
- If the parameter is not specified by this command <CT>, each label will be cut after being printed.
- In case the parameter "a" is set to 0, no label will be cut.
- Set this command before <Q> command.
- This command may not be used in combination with other cut commands <~>.

[ESC+NC] Eject and Cut

Hexadecimal code	ESC	NC	Parameter
	<1B>$_{16}$	<4E>$_{16}$<43>$_{16}$	None
Initial value	None		

Valid range and term of command	When the power is OFF	The set command is not maintained.
	Valid range within items	The set command becomes invalid.
	Valid range between items	The set command becomes invalid.

[Function]

Specifying eject and cut operation.

[Format]

<NC>

[Coding Example]

<A>
<NC>
<Z>

(1) Label stop position

A: Printed

B: Not printed

C: Not printed

D: Not printed

(2) Command received

(3) Label is fed to the cut position.

(4) Label is cut off.

(5) Label is back fed to the print position.

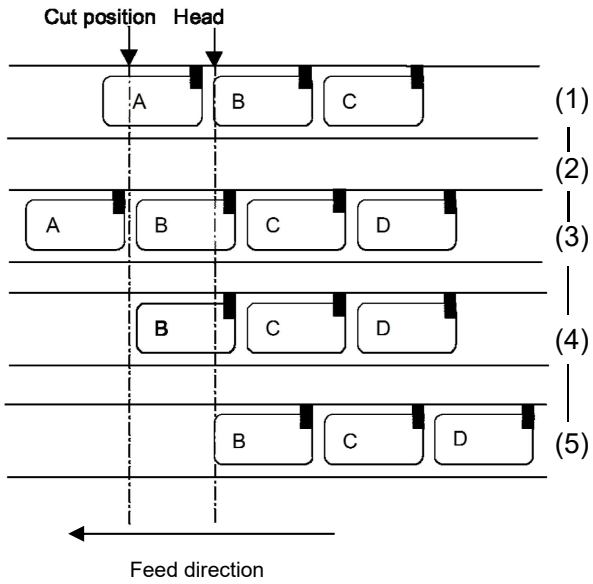

[Supplementary Explanation]

- Valid only for Cutter models.
- This command is used to cut the last label remaining in the printer.
- This command <NC> should be used by differentiating between Start Code <A> and Stop Code <Z>.
- This command <NC> may not be used in combination with other commands.
- This command <NC> is valid when the printer still holds the label which is not cut after being printed.

[Notes]

- This command is used to cut remaining label in printer after the commands <CT>0 or <~>0 is executed.

[ESC+~A] Cut Number Unit

Hexadecimal code	ESC	~A	Parameter
	<1B>$_{16}$	<7E>$_{16}$<41>$_{16}$	aaaa
Initial value	aaaa=1		

Valid range and term of command	When the power is OFF	The set parameter is not maintained.
	Valid range within items	The set parameter is valid until the next specification is made.
	Valid range between items	The set parameter becomes initial value at the next item <A>.

[Function]

Specifying the number of labels for each cut.

[Format]

<~A>aaaa

- Parameter

  a [Number of labels between each cut] = Valid range : 0 to 9999

[Coding Example]

<A>
<V>100<H>200<P>2<L>0202<XM>ABC
<~A>2
<Q>7
<Z>

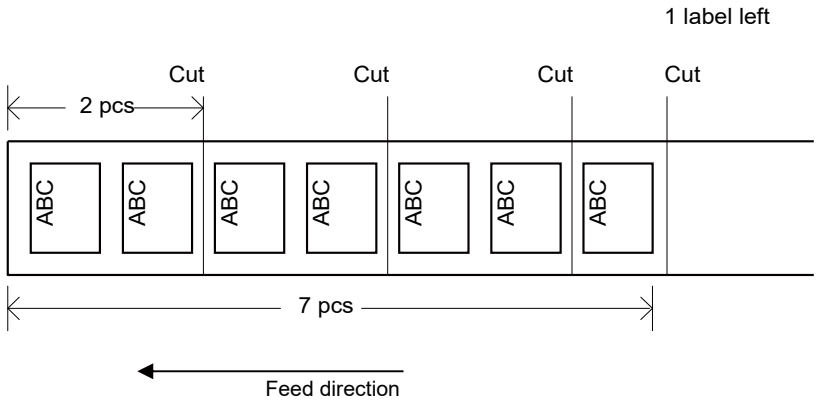

[Supplementary Explanation]

- Valid only for Cutter models.
- If the parameter is not specified by this command <~A>, each label will be cut after being printed.
- In case the parameter "a" is set to 0, no label will be cut.
- Set this command before Print Quantity <Q>.
- This command may not be used in combination with other cut commands <~>.

[ESC+~B] Eject and Cut

Hexadecimal code	ESC	~B	Parameter
	$<1B>_{16}$	$<7E>_{16}<42>_{16}$	None
Initial value	None		

Valid range and term of command	When the power is OFF	The set command is not maintained.
	Valid range within items	The set command becomes invalid.
	Valid range between items	The set command becomes invalid.

[Function]

Specifying eject and cut operation.

[Format]

<~B>

[Coding Example]

<A>
<~B>
<Z>

(1) Label stop position

A: Printed

B: Not printed

C: Not printed

D: Not printed

(2) Command received

(3) Label is fed to the cut position.

(4) Label is cut off.

(5) Label is back fed to the print position.

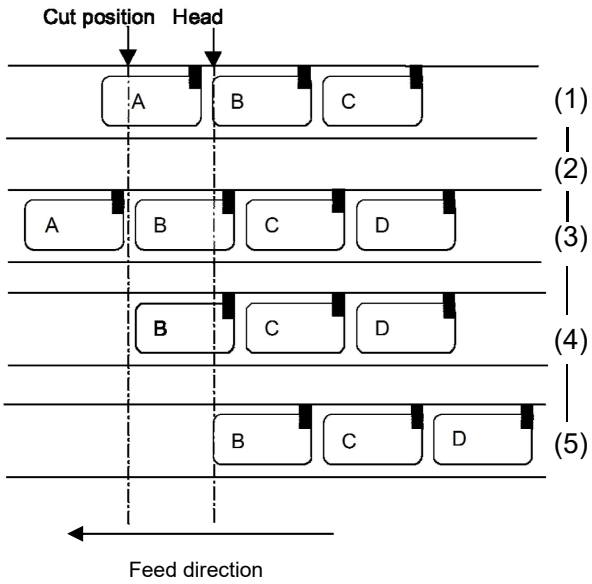

[Supplementary Explanation]

- Valid only for Cutter models.
- This command is used to cut the last label remaining in the printer.
- This command <~B> should be used by differentiating between Start Code <A> and Stop Code <Z>.
- This command <~B> may not be used in combination with other commands.
- This command <~B> is valid when the printer still holds the label which is not cut after being printed.

[Notes]

- This command is used to cut remaining label in printer after the commands <~A>0 or <~>0 is executed.

[ESC+*] Memory Clear

Hexadecimal code	ESC	*	Parameter
	<1B>$_{16}$	<2A>$_{16}$	a[bbb...b]
Initial value	None		

Valid range and term of command	When the power is OFF	The set parameter is not maintained.
	Valid range within items	The set parameter becomes invalid.
	Valid range between items	The set parameter becomes invalid.

[Function]

Clearing the contents registered in the internal memory.

[Format]

<*>a

- Parameter

  a [Item to be cleared]
  Not specified : Single item buffer, Receive buffer, Edit buffer (Reprint is not possible)
  Multi item buffer, Receive buffer, Edit buffer (Clears job in parsing)
  T : User defined characters area
  & : Form overlay
  X : All clear
  (Receive buffer, Edit buffer, User defined characters, form overlay)
  Note the job, which is currently in progress, will not be cleared.

[Coding Example1] Clear receive and edit buffer

<A>
<*>
<Z>

[Coding Example2] All clear

<A>
<*>X
<Z>

[Coding Example3] Clear user-defined characters

<A>
<*>T
<Z>

[Supplementary Explanation]

- Set this command between Start Code <A> and Stop Code <Z>.
- This command <*> (a=X) will clear all the data sent before the command. However, the data which is completely parsed before the command will not be cleared. X will also clear user-defined characters and form overlay.

[Points]

- After the command <*> is executed, have an interval of more than 100 ms before sending next print data.

- The job in printing will not be terminated by the command <*>.

[ESC+@] Offline

Hexadecimal code	ESC	@	Parameter
	<1B>$_{16}$	<40>$_{16}$	None
Initial value	None		

Valid range and term of command	When the power is OFF	The set command is not maintained.
	Valid range within items	The set command becomes invalid.
	Valid range between items	The set command becomes invalid.

[Function]

Set this product offline.

[Format]

<@>

[Coding Example]

<A>
<@>
<Z>

[Supplementary Explanation]

- Set this command between Start Code <A> and Stop Code <Z>.
- Select single-item-buffer for data transmission mode.
- When this command is used at offline state, this command is ignored.

[ESC+C] Reprint

Hexadecimal code	ESC	C	Parameter
	<1B>$_{16}$	<43>$_{16}$	None
Initial value	None		

Valid range and term of command	When the power is OFF	The set command is not maintained.
	Valid range within items	The set command becomes invalid.
	Valid range between items	The set command becomes invalid.

[Function]

Specifies to reprint the last label.

[Format]

<C>

[Coding Example]

<A>
<C>
<Z>

[Supplementary Explanation]

- Since the last print data will be cleared by powering off, reprint operation will not be available after this product rebooted.
- The Forced Tear Off <TK> and Eject and Cut <~B> do not execute reprinting.

[Points]

- In case the print data contains sequential numbering by Sequential Number <F>, the same number will be printed.

[ESC+E] Auto Line Feed

Hexadecimal code	ESC	E	Parameter
	<1B>$_{16}$	<45>$_{16}$	aaa
Initial value	None		

Valid range and term of command	When the power is OFF	The set parameter is not maintained.
	Valid range within items	The set parameter becomes invalid.
	Valid range between items	The set parameter becomes invalid.

[Function]

Specifies amount of line spacing and CR (Line feed).

[Format]

<E>aaa

- Parameter

  a [line spacing] = valid range : 0 to 999 dots

[Coding Example]

```
<A>
<E>10
<V>100<H>200<P>2<L>0304<XM>ABCDE+CR
FGHIJ+CR
<Q>2
<Z>
```

[Supplementary Explanation]

- When CR (0DH) is specified, linefeed based on line pitch will be performed.
- Rotation <%> can be used in combination with this command.
- This command may be used in a job and change the line spacing as necessary.
- Specify this command before designating the consecutive print of 1-line.
- Specifying font command executes the line feed regardless of CR/LF deletion setting.
- Performing auto linefeed by the designation of CR (0DH), print start position of linefeed will be determined based on the pitch specified with Auto Line Feed <E> and the value specified with Horizontal Print Position <H> designated after Auto Line Feed <E>. In case that Print Position <H> is specified several times after Auto Line Feed <E>, return position by CR (0DH) will be at the end of Print Position <H>.

[Print sample]

```
<A><E>0
<V>100<H>100
<XM>ABC
<V>100<H>150
<XM>ABC+CR
DEF
<Z>
```

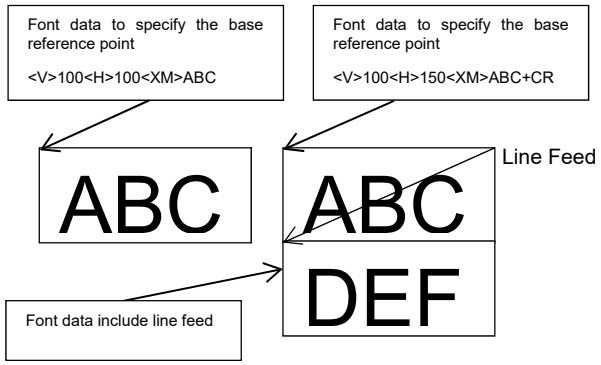

[ESC+PO] Offset

Hexadecimal code	ESC	PO	Parameter
	<1B>$_{16}$	<50>$_{16}$<4F>$_{16}$	abcc
Initial value	a=0, b=+, cc=00		

Valid range and term of command	When the power is OFF	The set parameter is not maintained.
	Valid range within items	The set parameter is valid until the next specification is made.
	Valid range between items	The set parameter is valid until the next specification is made.

[Function]

Gives offset to media's stop position on the fly.

[Format]

<PO>abcc

- Parameter

  a [Offset]
  0 : Cut posotion
  1 : Dispenser posotion
  2 : Tear-off posotion
  3 : Print start posotion

  b [Offset direction]
  + : Feed forward
  - : Backward

  c [Amount of offset] = Valid range : 00 to 99 (dots)

[Coding Example]

<A>
<PO>3+08
<Z>

[Supplementary Explanation]

- This command does not need to be set in normal printing.
- Please specify an appropriate value when the printing is off, which is unique for each product. This product will not work properly if you do not specify appropriate value.

[ESC+IG] Sensor Type

Hexadecimal code	ESC	IG	Parameter
	<1B>$_{16}$	<49>$_{16}$<47>$_{16}$	a
Initial value	a=1		

Valid range and term of command	When the power is OFF	The set parameter is maintained.
	Valid range within items	The set parameter is valid until the next specification is made.
	Valid range between items	The set parameter is valid until the next specification is made.

[Function]

Specifies the sensor type.

[Format]

<IG>a

- Parameter

  a [Sensor type]
  0 : Reflective (I-mark)
  1 : Transmissive (Gap)
  2 : Sensor disabled

[Coding Example]

<A>
<IG>1
<Z>

[Supplementary Explanation]

- This command does not need to be set in normal printing.
- The set parameter is maintained after turning off this product.
- Do not use this command while printing operation as sensor may not work properly.
- Receiving print command after changing the sensor type executes printing after backfeed except specifying the "ignore sensor" to the sensor type. Feed motion is not performed after turning the product's power off and then power on.
- Command error occurs when setting printer operation mode to [Tear-Off] and [Dispenser] and specifying sensor type to 2 (Ignore sensor).
- When printer operation mode is set to [Linerless cutter], the range will be available only in 0: Reflective sensor (I-MARK) and 2: Ignore sensor. When 1: Transmissive sensor (GAP) is specified, there will be no command error. In that case, the value will not be set.

[ESC+PH] Print Method

Hexadecimal code	ESC	PH	Parameter
	<1B>$_{16}$	<50>$_{16}$<48>$_{16}$	a
Initial value	a=0		

Valid range and term of command	When the power is OFF	The set parameter is maintained.
	Valid range within items	The set parameter is valid until the next specification is made.
	Valid range between items	The set parameter is valid until the next specification is made.

[Function]

Specifying print method.

[Format]

<PH>a

- Parameter

  a [Print method]
  0 : Thermal transfer
  1 : Direct Thermal

[Coding Example]

<A>
<PH>0
<Z>

[Supplementary Explanation]

- Delimit Start Code <A> and Stop Code <Z> with this command for use.
- The set parameter is maintained after turning off this product.

[ESC+PM] Print mode

Hexadecimal code	ESC	PM	Parameter
	<1B>$_{16}$	<50>$_{16}$<4D>$_{16}$	a
Initial value [aa]	a=0		

Valid range and term of command	When the power is OFF	The set parameter is maintained.
	Valid range within items	The set parameter is valid until the next specification is made.
	Valid range between items	The set parameter is valid until the next specification is made.

[Function]

Specifying print mode.

[Format]

<PM>a

- Parameter

a [Print mode]
0: Continuous
1: Tear-off
2: Cutter (head position)
3: Cutter (cutter position)
4: Cutter (no backfeed)
5: Linerless cutter (cutter position)
7: Dispense (head position)
8: Dispense (dispensing position)
B: Cutter motion (cutter position + cut & print)

[Coding Example]

<A>
<PM>0
<Z>

[Supplementary Explanation]

- The valid operation mode vary by installed options.

Option	Specify operation mode
None	Continuous, Tear-off
Dispense mode	Continuous, Tear-off, Dispense (Head position), Dispense (Dispensing position)
Cutter mode	Continuous, Cutter (Head position), Cutter (Cutter position), Cutter (No backfeed)
Linerless cutter	Linerless cutter (Cutter position)

Printer does not shift to the specified print operation mode if anything other than the above is specified.

- The below explains how each print operation mode works.

Continuous

This product stays still after printing.

Tear-off

The media will be fed up to the tear-off edge after printed. Then this product, after receiving next print data, will back feed the next label to the print head position.

Cutter (Head position)

This product will back feed the label up to the print head position immediately after the last label is cut.

Cutter (Cutter position)

This product, after receiving the next print data, will back feed the media to the print head position.

Cutter (No backfeed)

No back feed. Printer feeds label till the edge of label to cut label.

Linerless cutter (Cutter position)

The mode performing following operation that receive print data, then backfeed to the print head position, after that print and cut the label after completing printing.

Dispense (Head position)

Back feeds the labels to head position after dispensing.

Dispense (Dispensing position)

The media will be fed up to the head position after data receiving and the label will be fed to the dispensing position after printing.

Cutter (Cutter position + Cut during print)

When receiving print data, this product cuts the last label while printing a label.

[ESC+KM] Mincho (Kanji)

Hexadecimal code	ESC	KM	Parameter
	<1B>$_{16}$	<4B>$_{16}$<4D>$_{16}$	None
Initial value	None		

Valid range and term of command	When the power is OFF	The set parameter is maintained.
	Valid range within items	The set parameter is valid until the next specification is made.
	Valid range between items	The set parameter is valid until the next specification is made.

[Function]

Sets Kanji font style to Mincho.

[Format]

<KM>

[Coding Example]

```
<A>
<KM>
<V>100<H>200<P>2<L>0304
<K1>H82508A94816A83548367815B
<KG>
<V>200<H>200<P>2<L>0304
<K1>H82508A94816A83548367815B
<Q>2
<Z>
```

[Supplementary Explanation]

- It is possible to specify multiple Kanji codes within 1 item.

[ESC+KG] Gothic (Kanji)

Hexadecimal code	ESC	KG	Parameter
	<1B>$_{16}$	<4B>$_{16}$<47>$_{16}$	None
Initial value	None		

Valid range and term of command	When the power is OFF	The set parameter is maintained.
	Valid range within items	The set parameter is valid until the next specification is made.
	Valid range between items	The set parameter is valid until the next specification is made.

[Function]

Sets Kanji font style to Gothic.

[Format]

<KG>

[Coding Example]

```
<A>
<KG>
<V>100<H>200<P>2<L>0304
<K1>H82508A94816A83548367815B
<KM>
<V>200<H>200<P>2<L>0304
<K1>H82508A94816A83548367815B
<Q>2
<Z>
```

[Supplementary Explanation]

- It is possible to specify multiple Kanji codes within 1 item.

[ESC+CE] European Code Page

Hexadecimal code	ESC	CE	Parameter
	<1B>$_{16}$	<43>$_{16}$<45>$_{16}$	a...a(,b)
Initial value	None		

Valid range and term of command	When the power is OFF	The set parameter is maintained.
	Valid range within items	The set command is valid until the next specification is made.
	Valid range between items	The set command is valid until the next specification is made.

[Function]

Specify the European code page to be used.

[Format]

<CE>a...a(,b)

- Parameter

  a [Code page name] = Valid range : refer to the [Code page parameter] below.
  b [Code page setting maintain] = Valid range : P (fixed)
  Specify [P] to retain selected code page. (omissible)
  When omitted, the selected code page is not retained.

[Coding Example 1] Win 1253 setting

<A>
<V>100<H>200<P>2<L>0304**<CE>1253**<XU>ABCDE
<Q>2
<Z>

[Coding Example 2] DOS 855 setting

<A>
<V>100<H>200<P>2<L>0304**<CE>855**<XU>ABCDE
<Q>2
<Z>

[Code page parameter]

Parameter a	Official name	Supplementary explanation
858	DOS 858	Multilingual Latin 1 + Euro character Default Code page proprietary to SATO.
88591	ISO 8859/1	ISO 8859-1 Latin 1
88592	ISO 8859/2	ISO 8859-2 Latin 2
88599	ISO 8859/9	ISO 8859-9 Latin 5
850	DOS 850	Latin 1 Multilingual
852	DOS 852	Latin 2
855	DOS 855	Cyrillic
857	DOS 857	Turkish

Parameter a	Official name	Supplementary explanation
737	DOS 737	Greek
866	DOS 866	Cyrillic II
1250	Win 1250	Central Europe
1251	Win 1251	Cyrillic
1252	Win 1252	Western Latin 1
1253	Win 1253	Greek
1254	Win 1254	Turkish
1257	Win 1257	Baltic
869	IBM 869	IBM 869 Greek
201	X0201	Japanese X0201 *1
UTF-8	UTF-8	Unicode encoding in UTF-8

*1: Specifying X0201 to perform following operation.

Bitmap font (for U font, S font, M font, WB font and WL font): Print with X0201 character set. XU font, XS font, XM font, XB font and XL font: Print with default -858 (DOS 858) character set.

CG font: Print with 88591 (ISO 8859-1 Latin 1) character set.

[Code page support font]

Following bitmap fonts are extended for supporting European code page.

Font name	Size (dots)	Type face
U	5x9	Helvetica
S	8x15	Universal Condensed
M	13x20	Universal Condensed
WB	18x30	Universal
WL	28x52	Sans Serif Bold
XU	5x9	Helvetica
XS	17x17	Universal Condensed Bold
XM	24x24	Universal Condensed Bold
XB	48x48	Universal Condensed Bold
XL	48x48	Universal

Refer to the European code page specification for the print character set.

[ESC+TK] Forced Tear Off

Hexadecimal code	ESC	TK	Parameter
	<1B>$_{16}$	<54>$_{16}$<4B>$_{16}$	None
Initial value	None		

Valid range and term of command	When the power is OFF	The set parameter is not maintained.
	Valid range within items	The set parameter becomes invalid.
	Valid range between items	The set parameter becomes invalid.

[Function]

Executes Tear off compulsory.

[Format]

<TK>

[Coding Example]

<A>
<TK>
<Z>

[Supplementary Explanation]

- This command can be specified only in Tear off mode.
- With this command, this product executes Tear off motion without waiting the time set by Option Waiting Time <TW>. If the next data is received before Tear off motion, Tear off is executed compulsory.
- This command cannot be used in combination with other commands. Please send the command independently.

[Notes]

- This command can be used to shorten print time set at Option Waiting Time, if it is sure that there is no following item.

[ESC+TW] Option Waiting Time

Hexadecimal code	ESC	TW	Parameter
	<1B>$_{16}$	<54>$_{16}$<57>$_{16}$	aaa
Initial value	aaa=000		

Valid range and term of command	When the power is OFF	The set parameter is maintained.
	Valid range within items	The set parameter becomes invalid.
	Valid range between items	The set parameter becomes invalid.

[Function]

Setting the option standby time.

[Format]

<TW>aaa

- Parameter

  aaa [Waiting time] = Valid range : 000, 005 to 200 (unit: 100 ms)

[Coding Example] (waiting time = 1.5 seconds)

<A>
<TW>015
<Z>

[Supplementary Explanation]

- This command specifies, in Tear-off mode, the waiting time between print completion and Tear-off motion.
- The set parameter becomes valid soon after receiving the command and will be retained after power off.

[ESC+CL] Delete CR/LF

Hexadecimal code	ESC	CL	Parameter
	<1B>$_{16}$	<43>$_{16}$<4C>$_{16}$	a
Initial value	None		

Valid range and term of command	When the power is OFF	The set parameter is maintained.
	Valid range within items	The set parameter is valid until the next specification is made.
	Valid range between items	The set parameter is valid until the next specification is made.

[Function]

Deletes CR/LF included in print commands.

[Format]

<CL>a

- Parameter

  a [Delete CR/LF]
  0 : Do not delete CR/LF
  1 : Deletes CR/LF

[Coding Example]

<A>
<CL>1
<Z>

[Supplementary Explanation]

- Delimit Start Code <A> and Stop Code <Z> with this command for use.
- This command cannot be used in combination with other commands.

[ESC+VB] Barcode Checker

Hexadecimal code	ESC	VB	Parameter
	<1B>$_{16}$	<56>$_{16}$<42>$_{16}$	a,b,c,d,e,f,g
Initial value	None		

Valid range and term of command	When the power is OFF	The set parameter is maintained.
	Valid range within items	The set parameter is valid until the next specification is made.
	Valid range between items	The set parameter is valid until the next specification is made.

[Function]

A control command for barcode checker.

[Format]

<VB>a,b,c,d,e,f,g

- Parameter

a [Mode]
0 : Disabled
1 : Readable
2 : Comparison
* When "Disabled" is specified, all the subsequent parameters will not function.*1

b [Start Position]
10 to 20000 dots (203 dpi)
15 to 18000 dots (305 dpi)
30 to 9600 dots (609 dpi)

c [VOID print]
0 : Disabled
1 : Enabled

d [Retry Count]
0 to 10
* When the "VOID print" is set to "Disabled," this parameter will not function.*1

e [Host Notification]
0 : Disabled
1 : Enabled

f [Specify the number of barcode]
0 : Command (the number of barcode command)
1 : Setting
* The parameter functions only when the "mode" is set "Readable."*1

g [the number of barcode]
1 to 10: the number of barcode to read
* When "Specify the number of barcode" is set to "Command," this parameter will not function.*1

*1 When the non-functional parameter is specified, it will be set although it will not function.

[Coding Example 1]

Mode: Disabled (all the subsequent parameters are omitted.)

<A>
<VB>0,,,,,,
<Z>

[Coding Example 2]

Mode: Readable, Start Position: 30, VOID print: Disabled, (Retry Count: omitted), Host Notification: Disabled, Specify the number of barcode: Command, (the number of barcode: omitted)

<A>
<VB>1,30,0,,0,0,
<Z>

[Coding Example 3]

Mode: Readable, Start Position: 30, VOID print: Enabled, Retry Count: 3, Host Notification: Disable, Specify the number of barcode: Setting, the number of barcode: 2

<A>
<VB>1,30,1,3,0,1,2
<Z>

[Coding Example 4]

Mode: Comparison, Start Position: 30, VOID print: Enabled, Retry Count: 3, Host Notification: Disabled, (Specify the number of barcode: omitted), (the number of barcode: omitted)

<A>
<VB>2,30,1,3,0,,
<Z>

[Supplementary Explanation]

- Each parameter can be omitted.
- When RFID function is enabled, this command returns a command error.
- This command is not allowed to be used with other commands (it cannot be used in the printing item).

[ESC+#] Base Reference Point

Hexadecimal code	ESC	#	Parameter
	<1B>$_{16}$	<23>$_{16}$	abbb
Initial value	None		

Valid range and term of command	When the power is OFF	The set parameter is maintained.
	Valid range within items	The set parameter is valid until the next specification is made.
	Valid range between items	The set parameter is valid until the next specification is made.

[Function]

Specify the base reference point in vertical direction.

[Format]

<#>abbb

- Parameter

  a [Moving Direction]
  +: Feed Direction
  -: Reverse Direction
  b [Distance in dots]
  Valid range: 000 to 600 (dots)

[Coding Example]

<A>
<#>+040
<Z>

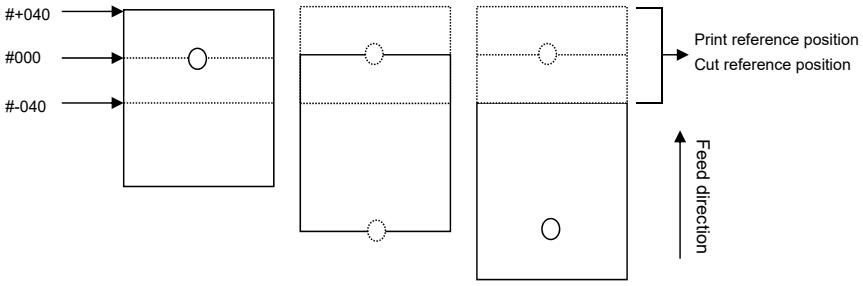

[Supplementary Explanation]

- Initial value of the reference position is 0 dot.
- When parameter “a” [Moving direction] = "-: Reverse Direction," do not specify 58 mm or more in total with other offset adjustment value. If it is set to 58 mm or more, it does not stop properly.

Calendar Commands

[ESC+WT] Calendar Setup

Hexadecimal code	ESC	WT	Parameter
	$<1B>_{16}$	$<57>_{16}<54>_{16}$	aabbccddee
Initial value	None		

Valid range and term of command	When the power is OFF	The set parameter is not maintained.
	Valid range within items	The set parameter is valid until the next specification is made.
	Valid range between items	The set parameter is valid until the next specification is made.

[Function]

Specifying the calendar.

[Format]

<WT>aabbccddee

- Parameter

  a [Year] = Valid Range : 00 to 35
  b [Month] = Valid Range : 01 to 12
  c [Day] = Valid Range : 01 to 31
  d [Hour] = Valid Range : 00 to 23
  e [Minutes] = Valid Range : 00 to 59

[Coding Example] Specifying and printing out "2020.1.1 13:13”

<A>
<WT>2001011313
<Z>

[Supplementary Explanation]

- This command requires optional RTC (Real Time Clock) Kit. This command cannot be used without RTC Kit.
- Valid calendar setting value is from year: 2000, month: 1, day: 1, hour: 00, minutes: 00 to year: 2035, month: 12, day: 31, hour: 23, minutes: 59.

[ESC+WP] Calendar Arithmetic (Add)

Hexadecimal code	ESC	WP	Parameter
	<1B>$_{16}$	<57>$_{16}$<50>$_{16}$	abbb
Initial value	None		

Valid range and term of command	When the power is OFF	The set parameter is not maintained.
	Valid range within items	The set parameter is valid until the next specification is made.
	Valid range between items	The set parameter becomes invalid.

[Function]

Specifying addition of calendar date.

[Format]

<WP>abbb

- Parameter

  a [Specification of Year-Month-Day]
  Y : Year
  M : Month
  D : Day
  h : Time
  W : Week

  b [Specification of additional value for Y-M-D-h]
  Valid Range of Y : 0 to 9
  Valid Range of M : 00 to 99
  Valid Range of D : 000 to 999
  Valid Range of h : 000 to 999
  Valid Range of W : 00 to 99

[Coding Example]

Specifying and printing out the date that is three months from today.

<A>
<WP>M03
<V>100<H>200
<OB><WA>DD/MM/YY
<Q>2
<Z>

[Supplementary Explanation]

- This command requires optional RTC (Real Time Clock) Kit. This command cannot be used without RTC Kit.
- This command adds specified value to specified data (Year, Month, Day, Hour and Week). It can specify the date three months from current date.
- When there are more than one <WP> in one item, the last one is available.

[ESC+WA] Calendar Print

Hexadecimal code	ESC	WA	Parameter
	<1B>$_{16}$	<57>$_{16}$<41>$_{16}$	a
Initial value	None		

Valid range and term of command	When the power is OFF	The set parameter is not maintained.
	Valid range within items	The set parameter becomes invalid.
	Valid range between items	The set parameter becomes invalid.

[Function]

Specifying the print of calendar.

[Format]

<WA>parameter

- Parameter

  a [Specification of print contents]
  YYYY(Year) = Valid Range : 2000 to 2035
  YY(Year) = Valid Range : 00 to 99
  MM(Month) = Valid Range : 01 to 12
  DD(Day) = Valid Range : 01 to 31
  HH(Hour) = Valid Range : 00 to 11
  hh(Hour) = Valid Range : 00 to 23
  mm(Minutes) = Valid Range : 00 to 59
  ss(Second) = Valid Range : 00 to 59
  TT(AM/PM) = Valid Range : AM/PM
  JJJ(Julian date) = Valid Range : 001 to 366
  WW(Week) = Valid Range : 00 to 53
  ww(Week) = Valid Range : 01 to 54

[Coding Example]

Specifying and printing out the date that is three months from today.

```
<A>
<WP>M03
<V>100<H>200
<OB><WA>DD/MM/YYYY
<V>200<H>200
<OB><WA>hh:mm:ss TT
<V>300<H>200
<OB><WA>YY JJJ WW ww
<Q>2
<Z>
```

[Supplementary Explanation]

- This command requires optional RTC (Real Time Clock) Kit. This command cannot be used without RTC Kit.
- When specifying QTY>2, real-time printing will be performed per label.
- This command specification is available up to six locations within one form.
- Up to 16 characters are available for calendar print data.

- In the [Parameter] above, count the initiation of WW (Week) as [0], and ww (Week) as 1 .

WW/ww command example
Ex.1) January in 2008, The year of Jan 1 begins with Mon, Tue, Wed, and Thu.

M	T	W	T	F	S	S
31	**1**	**2**	**3**	**4**	**5**	**6**
7	**8**	**9**	**10**	**11**	**12**	**13**
14	**15**	**16**	**17**	**18**	**19**	**20**
21	**22**	**23**	**24**	**25**	**26**	**27**
28	**29**	**30**	**31**	1	2	3

WW	ww
wk0	wk1
wk1	wk2
wk2	wk3
wk3	wk4
wk4	wk5

- 2007/12/31: WW (week) prints week 0. (ww (week) prints week 1.)
- 2008/01/25: WW (week) prints week 3. (ww (week) prints week 4.)
- 2008/01/28: WW (week) prints week 4. (ww (week) prints week 5.)
- 2008/02/03: WW (week) prints week 4. (ww (week) prints week 5.)

Ex.2) January in 2010, the year of Jan 1 begins with Fri, Sat, and Sun.

M	T	W	T	F	S	S
28	29	30	31	**1**	**2**	**3**
4	**5**	**6**	**7**	**8**	**9**	**10**
11	**12**	**13**	**14**	**15**	**16**	**17**
18	**19**	**20**	**21**	**22**	**23**	**24**
25	**26**	**27**	**28**	**29**	**30**	**31**

WW	ww
wk52	wk53
wk 0	wk 1
wk 1	wk 2
wk 2	wk 3
wk 3	wk 4

- 2010/01/01: WW (week) prints week 52. (ww (week) prints week 53.)
- 2010/01/14: WW (week) prints week 0. (ww (week) prints week 1.)

Note: The yeas Jan 1 begins with Fri, Sat and Sun, the second week of January is set as week 0 (ww(week): week1).

- Specify the font type for calendar printing by font command (refer to the [Valid command] below) before this command.
- When used in conjunction with character pitch specification, please specify it immediately before this command.

<A>
<WP>M03
<V>100<H>200
<OB><P>10**<WA>DD/MM/YYYY**
<Q>2
<Z>

- Correct calendar is not printed in following condition.

The time data will be edited firstly when the host cannot send whole print data of one item to this product (e.g. product's buffer is full) and also received data included the calendar print command. This product will print the calendar when receiving one item data after taking a long time and completing editing all data, and the printed calendar is not the time of printing but the time of editing time data.

[Valid Commands]

Print Position	<V>	<H>								
Modification	<P>	<L>	<%>							
Font	<XU>	<XS>	<XM>	<XB>	<XL>	<OA>	<OB>	<U>	<S>	<M>
	<WB>	<WL>	<X20>	<X21>	<X22>	<X23>	<X24>			

[ESC+WU] Expanded Calendar Print

Hexadecimal code	ESC	WU	Parameter
	<1B>$_{16}$	<57>$_{16}$<55>$_{16}$	a
Initial value	None		

Valid range and term of command	When the power is OFF	The set parameter is not maintained.
	Valid range within items	The set parameter becomes invalid.
	Valid range between items	The set parameter becomes invalid.

[Function]

Specifying the print of calendar.

[Format]

<WU>parameter

- Parameter

a [Specification of print contents]

YYYY (Year)	Valid range:	2000-2035
YY (Year)	Valid range:	00-35
Y (Year)	Valid range:	0-3
MMM (Abbreviation of month)	Valid range:	Jan-Dec
MM (Month)	Valid range:	01-12
M (Month)	Valid range:	A-L
DDDDDDDDD (Day)	Valid range:	SUNDAY-SATURDAY
DDD (Abbreviation of month)	Valid range:	SUN-SAT
DD (Date)	Valid range:	01-31
D (one character day code)	Valid range:	1-9, A-V
HH (Hour)	Valid range:	00-11
GG (Hour)	Valid range:	01-12
hh (Hour)	Valid range:	00-23
mm (Minute)	Valid range:	00-59
ss (Second)	Valid range:	00-59
TT (Morning/Afternoon)	Valid range:	AM/PM
JJJ (Julian Date)	Valid range:	001-366
WW (Week)	Valid range:	00-52
ww (Week)	Valid range:	01-53
QQ (Time)	Valid range:	01-96 (1=15 minutes: 96=24 hours)
Contol code	>Z...>Z	

[Coding example 1]

Specifying and printing out the date that is three months from today.

<A>
<WP>M03
<V>100<H>200
<OB>**<WU>>ZDD/MM/YY hh:mm>Z**
<Q>2
<Z>

[Coding Example 2]

Specifying and printing out “DATE:” and the current date.

<A>

<V>100<H>200
<OB>**<WU>DATE:>ZDD/MM/YY hh:mm>Z**
<Q>2
<Z>

[Supplementary Explanation]

- This command requires optional RTC (Real Time Clock) Kit. Calender error will occur whenRTC Kit is not used.
- This command must be specified at the top of the text data part or the barcode data part.
- When specifying QTY>2, real-time printing will be performed per label.
- This command specification is available up to six blocks within one item.
- Up to 16 characters are available for calendar print data.
- In the [Parameter] above, count the initiation of WW (Week) as [0], and ww (Week) as 1. Please refer to "WW/ww command example" to be described hereinafter for the details.
- Specify the font type for calendar printing by font command before this command. Refer to [Valid commands] below for the available commands.
- Do not use font type command <OA> and <OB> when printing MMM, M, DDDDDDDDD, DDD, and D of the parameter a. The lower case of the alphabet is not available with those fonts.
- Use the control command >Z in a pair at before and after the parameter. When it is not used in a pair, it will be recognized as text when specified the font command and it will be a command error when specified the barcode command.
- When there is return or line feed (<0D>$_{16}$, <0A>$_{16}$) in between >Z...>Z, it is not recognized as a pair.
- When printing >Z, put >JZ instead of >Z.
- When calender is used as a parameter for barcode, follow the specifications of barcode. For example, it is not possible to specify other than numeric data with GS1-128 (UCC/EAN128), therefore MMM cannot be specified as the parameter a.
- Refer to calender print <WA> for QQ (Time) of the parameter a.

WW/ww command example

Ex.1) January in 2008, the year of Jan 1 begins with Mon, Tue, Wed, and Thu.

M	T	W	T	F	S	S
31	**1**	**2**	**3**	**4**	**5**	**6**
7	**8**	**9**	**10**	**11**	**12**	**13**
14	**15**	**16**	**17**	**18**	**19**	**20**
21	**22**	**23**	**24**	**25**	**26**	**27**
28	**29**	**30**	**31**	1	2	3

WW	ww
wk0	wk1
wk1	wk2
wk2	wk3
wk3	wk4
wk4	wk5

- 2007/12/31: WW (week) prints week 0. (ww (week) prints week 1.)
- 2008/01/25: WW (week) prints week 3. (ww (week) prints week 4.)
- 2008/01/28: WW (week) prints week 4. (ww (week) prints week 5.)
- 2008/02/03: WW (week) prints week 4. (ww (week) prints week 5.)

Ex.2) January in 2010, the year of Jan 1 begins with Fri, Sat, and Sun.

M	T	W	T	F	S	S
28	29	30	31	**1**	**2**	**3**
4	**5**	**6**	**7**	**8**	**9**	**10**
11	**12**	**13**	**14**	**15**	**16**	**17**
18	**19**	**20**	**21**	**22**	**23**	**24**
25	**26**	**27**	**28**	**29**	**30**	**31**

WW	ww
wk52	wk53
wk 0	wk 1
wk 1	wk 2
wk 2	wk 3
wk 3	wk 4

- 2010/01/01: WW (week) prints week 52. (ww (week) prints week 53.)
- 2010/01/14: WW (week) prints week 0. (ww (week) prints week 1.)

Note: The year Jan 1 begins with Fri, Sat and Sun, the second week of January is set as week 0 (ww(week): week1).

- Correct calendar is not printed in following condition.

  The time data will be edited firstly when the host cannot send whole print data of one item to this product (e.g. product's buffer is full) and also received data included the Expanded Calendar Print <WU>. This product will complete editing all data and print the calendar when receiving one item data after taking a long time in such condition. The printed calendar is not the time of printing but the time of editing time data.

[Valid Commands]

Print position	<V>	<H>								
Modification	<P>	<L>	<%>							
Font	<XU>	<XS>	<XM>	<XB>	<XL>	<OA>	<OB>			
	<U>	<S>	<M>	<WB>	<WL>					
	<X20>	<X21>	<X22>	<X23>	<X24>					
Barcode	<B>	<BC>	<BG>	<BI>	<BZ>	<D>	<D><d>	<BD>	<BT>	<BW>
	<BP>	<BF>	<BS>	<BL>	<BL><d>	<BM>				
2D Code	<2D50>	<2D51>								

Memory Card Commands

[ESC+CC] Card Slot for Use

Hexadecimal code	ESC	CC	Parameter
	$<1B>_{16}$	$<43>_{16}<43>_{16}$	a
Initial value	None		

Valid range and term of command	When the power is OFF	The set parameter is not maintained.
	Valid range within items	The set parameter is valid until the next specification is made.
	Valid range between items	The set parameter is valid until the next specification is made.

[Function]

Specifying the slot number for use.

This product can access to the media registered to the specified slot.

[Format]

<CC>a

- Parameter

  a [Slot number]
  0 : Slot 0 (Initial value: Product's memory)
  1 : Slot 1 (Initial value: FROM)

[Coding Example]

<A>
<u><CC>1</u>
<GI>H003003001FF000000～000000FF
<Z>

[Supplementary Explanation]

- The allocation of the slot number can be changed from the above default in the memory card mode.

  * "Product's memory": Printer memory, "FROM": Flash ROM
- It is necessary to specify when accessing to "Product's memory" and "FROM."
- Specifying the unused slot becomes command error.
- When specifying slot number 0 (product’s memory), registration other than using the external character registration command is not available.

[Notes]

- Do not power off this product when accessing to the memory. When this product is turned off while memory accessing, the data in the accessed media may be corrupted.

[ESC+FM] Memory Card Initialization

Hexadecimal code	ESC	FM	Parameter
	<1B>$_{16}$	<46>$_{16}$<4D>$_{16}$	aaaaaaaa
Initial value	None		

Valid range and term of command	When the power is OFF	The set parameter is not maintained.
	Valid range within items	The set parameter becomes invalid.
	Valid range between items	The set parameter becomes invalid.

[Function]

Specifying the format (initialization) of memory card.

[Format]

<FM>aaaaaaaa

- Parameter

  a [User ID] = Specifying up to 8 bytes in alphanumeric and symbols.

[Coding Example]

<A>
<CC>1
<FM>satocard
<Z>

[Supplementary Explanation]

- Specify slot number registered with Card Slot for Use <CC> prior to this command <FM> by all means.
- This command <FM> is for formatting a memory card; therefore, it cannot be used in combination with other commands.
- Initialization takes time. Do not send any command until the initialization finishes.
- The error occurs when specifying the slot allocated to the product's memory.

[Notes]

- Do not power off this product when accessing to the memory. When this product is turned off while memory accessing, the data in the accessed media may be corrupted.

[ESC+BJF] Memory Card Initialization

Hexadecimal code	ESC	BJF	Parameter
	<1B>$_{16}$	<42>$_{16}$<4A>$_{16}$<46>$_{16}$	aaaaaaaa
Initial value	None		

Valid range and term of command	When the power is OFF	The set parameter is not maintained.
	Valid range within items	The set parameter becomes invalid.
	Valid range between items	The set parameter becomes invalid.

[Function]

Specifying the format (initialization) of memory card.

[Format]

<BJF>aaaaaaaa

- Parameter

  a [User ID] = Specifying up to 8 bytes in alphanumeric and symbols.

[Coding Example]

<A>
<CC>1
<u><BJF>satocard</u>
<Z>

[Supplementary Explanation]

- Specify slot number registered with Card Slot for Use <CC> prior to this command <BJF> by all means.
- This command <BJF> is for formatting a memory card; therefore, it cannot be used in combination with other commands.
- Initialization takes time. Do not send any command until the initialization finishes.
- The error occurs when specifying the slot allocated to the product's memory.

[Notes]

- Do not power off this product when accessing to the memory. When this product is turned off while memory accessing, the data in the accessed media may be corrupted.

[ESC+FP] Memory Card Status Print

Hexadecimal code	ESC	FP	Parameter
	<1B>$_{16}$	<46>$_{16}$<50>$_{16}$	None
Initial value	None		

Valid range and term of command	When the power is OFF	The set command is not maintained.
	Valid range within items	The set command becomes invalid.
	Valid range between items	The set command becomes invalid.

[Function]

Printing status of memory card.

[Format]

FP

[Coding Example]

<A>
<CC>1
<FP>
<Z>

[Supplementary Explanation]

- Specify slot number registered with Card Slot for Use <CC> prior to this command <FP> by all means.
- This command <FP> is for printing status of memory card; therefore, it cannot be used in combination with other commands.
- Status of memory card can be confirmed with a Media size of 68 mm in width and 90 mm in length.

[Notes]

- Do not power off this product when accessing to the memory. When this product is turned off while memory accessing, the data in the accessed media may be corrupted.

[ESC+BJS] Memory Card Status Print

Hexadecimal code	ESC	BJS	Parameter
	<1B>$_{16}$	<42>$_{16}$<4A>$_{16}$<53>$_{16}$	None
Initial value	None		

Valid range and term of command	When the power is OFF	The set parameter is not maintained.
	Valid range within items	The set parameter becomes invalid.
	Valid range between items	The set parameter becomes invalid.

[Function]

Printing status of memory card.

[Format]

<BJS>

[Coding Example]

<A>
<CC>1
<BJS>
<Z>

[Supplementary Explanation]

- This command <BJS> is for printing status of memory card; therefore, it cannot be used in combination with other commands.
- Status of memory card can be confirmed with a Media size of 68 mm in width and 90 mm in length.

[Notes]

- Do not power off this product when accessing to the memory. When this product is turned off while memory accessing, the data in the accessed media may be corrupted.

[ESC+&S] Form Overlay Registration

Hexadecimal code	ESC	&S	Parameter
	<1B>$_{16}$	<26>$_{16}$<53>$_{16}$	,aa(,bbbb,ccccc)
Initial value	None		

Valid range and term of command	When the power is OFF	The registered data become valid.
	Valid range within items	The registered data is valid until the next specification is made.
	Valid range between items;	The registered data is valid until the next specification is made.

[Function]

Specifying the registration of fixed print contents to a memory card.

[Format]

<&S>,aa(,bbbb,ccccc)

- Parameter

  a [Registration No.] = Valid range : 1 to 99
  b [Specification of horizontal size of window]
  Valid range : Refer to [Valid Range] section below (omissible).
  c [Specification of vertical size of window]
  Valid range : Refer to [Valid Range] section below (omissible).

[Coding Example]

```
<A>
<V>100<H>100<XS>MODEL
<CC>1
<&S>,1
<Z>
```

[Supplementary Explanation]

- Specify slot No. with Card Slot for Use <CC> prior to this command <&S> by all means.
- Delimit Start Code <A> and Stop Code <Z> with the format to be registered.
- Registration of identical registration No. is invalid.
- Both Print of Graphic <G> and Print of BMP File <GM> can be registered.
- This command <&S> allows up to 99 registries. Note that the capacity of registry may vary depending on the memory card to be used.
- Data registered with this command <&S> can be cleared with Clear <*>R.
- The error occurs when specifying unused or specifying the slot which this product is allocated.
- If the vertical size of the window is larger than the set paper length, a command error occurs.

[Notes]

- Do not power off this product when accessing to the memory. When this product is turned off while memory accessing, the data in the accessed media may be corrupted.

[Valid Range of Window Size]

Head density	Horizontal size of the window Valid range (dots)	Vertical size of the window Valid range (dots)
203 dpi	50 to 832	50 to 20000
305 dpi	50 to 1248	50 to 18000
609 dpi	50 to 2496	50 to 9600

[Valid Commands]

Print Position	<V>	<H>								
Font	<XU>	<XS>	<XM>	<XB>	<XL>	<OA>	<OB>	<RD>	<$=>	<K1>
	<K2>	<K3>	<K4>	<K5>	<K8>	<K9>	<KA>	<KB>	<KD>	<k1>
	<k2>	<k3>	<k4>	<k5>	<k8>	<k9>	<kA>	<kB>	<kD>	<U>
	<S>	<M>	<WB>	<WL>	<X20>	<X21>	<X22>	<X23>	<X24>	
Barcode	<B>	<BC>	<BG>	<BI>	<D>	<D><d>	<BD>	<BT>	<BW>	<BF>
	<BL>	<BL><d>	<BM>							
2D Code	<2D10>	<BK>	<2D12>	<2D20>	<BV>	<2D30>	<2D31>	<2D32>	<BQ>	
	<2D50>	<BX>	<2D51>	<2D70>						
Composite Symbol	<EU>									
Modification	<WD>	<FW>	<(>	<RF>	<FC>	<FT>	<RM>			
Graphic	<G>	<GM>	<GP>							

In general, this command is used for [Registration number] only. Specification of window height and width will control the movement with Vertical Print Position <V> and Horizontal Print Position <H> at the time of calling. For the movement at the time of calling, if registered area is exceeding print area, the portion outside of print area will not be printed.

The following are the brief operation.

(1) Normal (To register)

```
<A>
<V>100<H>100<P>2<L>0202
<X23>0ABCD
<V>60<H>60
<FW>0808V800H400
<V>320<H>60
<FW>04H400
<CC>1
<&S>,1
<Z>
```

Registered image

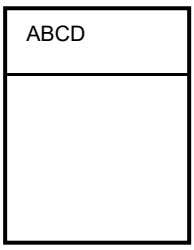

(2) When print is specified after the command <&S>

```
<A>
<V>100<H>100<P>2<L>0202
<X23>0ABCD
<V>60<H>60
<FW>0808V800H400
<V>320<H>60
<FW>04H400
<CC>1
<&S>,1
<V>200<H>100<OB>12345
<Z>
```

Anything specified prior to the command <&S> will be registered as form overlay.

Printing out this part

(3) When window size is specified

Label Size <A1>08000400, Window width [200], Window height [200]

```
<A>
<A1>08000400
<V>100<H>00<P>2<L>0202
<X23>0ABCD
<CC>1
<&S>,1,200,200
<Z>
```

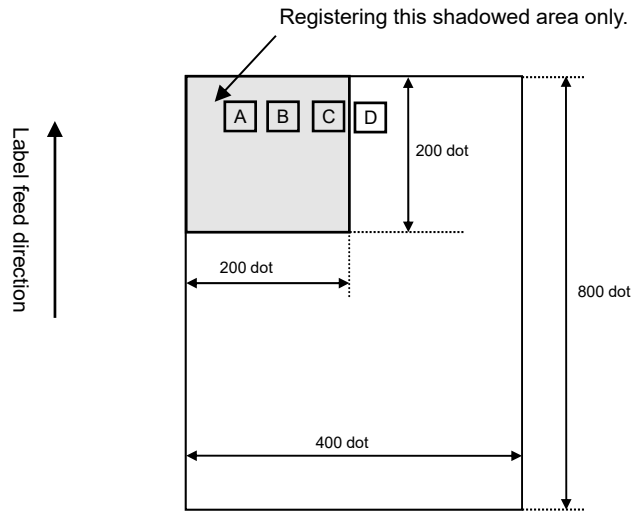

[ESC+&R] Form Overlay Call

Hexadecimal code	ESC	&R	Parameter
	<1B>$_{16}$	<26>$_{16}$<52>$_{16}$	,aa
Initial value	None		

Valid range and term of command	When the power is OFF	The set parameter is not maintained.
	Valid range within items	The set parameter becomes invalid.
	Valid range between items	The set parameter becomes invalid.

[Function]

Invoking the contents in memory card with Registration of Form Overlay <&S>.

[Format]

<&R>,aa

- Parameter

  a [Registration Number] = Valid range: 1 to 99

[Coding Example]

<A>
<CC>1
<&R>,1
<Z>

[Supplementary Explanation]

- Specify slot number registered with Card Slot for Use <CC> prior to this command <&R> by all means.
- This command can be combined with different registration No. and printed.
- When registration No. is not specified, this command will be ignored.
- If specifying unregistered No., Read/Write error will occur.
- When registering without specifying window, Vertical Print Position <V> and Horizontal Print Position <H> will be ignored and V1 and H1 (Start position of drawing area) will be determined.
- When specifying and registering window, movement with <V> and <H> will be enabled.

  Note that when exceeding print area, the portion outside of print area will not be printed.
- Please note that this command cannot be used without a memory card.
- The error occurs when specifying unused or specifying the slot which this product is allocated.

[Notes]

- Do not power off this product when accessing to the memory. When this product is turned off while memory accessing, the data in the accessed media may be corrupted.

[Valid Commands]

Print position	<V>	<H>								

[ESC+YS] Format Registration

Hexadecimal code	ESC	YS	Parameter
	<1B>$_{16}$	<59>$_{16}$<53>$_{16}$	,aaa
Initial value	None		

Valid range and term of command	When the power is OFF	The set parameter is not maintained.
	Valid range within items	The set parameter is valid until the next specification is made.
	Valid range between items	The set parameter is valid until the next specification is made.

[Function]

Registering print format.

[Format]

<YS>,aaa

- Parameter

  a [Format registration number] = Valid Range : 1 to 999

[Coding Example]

```
<A>
<CC>1
<YS>,1
</N>,3,3
<%>0<V>100<H>200<P>2<L>0101<XM>ABC
<Z>
```

[Supplementary Explanation]

- When registering multiple formats, Delimit Start Code <A> and Stop Code <Z> with one format.
- Specify Card Slot for Use <CC> prior to this command <YS> by all means.
- Use this command and Registration of Field </N> as a pair.
- Attempts to re-register with registered No., error will occur, and the targeted content will be printed.
- The error occurs when specifying unused or specifying the slot which this product is allocated.

[Notes]

- Do not power off this product when accessing to the memory. When this product is turned off while memory accessing, the data in the accessed media may be corrupted.
- The maximum registration with </N> is 99 fields. (Refer to [ESC+/N] Registration of Field for the commands can be registered.)
- The maximum registration with other than </N> is 50 fields. Refer to [Available registration command] below for the commands can be registered.

[Points]

- Details of Format Registration

  A group of commands can be registered to a memory card (option). Once registered, it saves time to specify the identical command group. The registration also allows a change of print data when invoking the format. Such function is called "Format Registration."
  One item consists of different command groups necessary for printing, and such groups are called "Field." Note that multiple fields make format.

  Commands for format registration:
  One format consists of a pair of commands from Start Code <A> to Stop Code <Z>, and specify Format Registration <YS> right after <A>. For <YS>, specify [Format registration number] between 1 and 999. And then, insert Registration of Field </N> after <YS> to specify [Field number] and [Digit number of print quantity]. After [Field number] and [Digit number of print quantity] are entered, specify print position, character type, barcode, and so on.

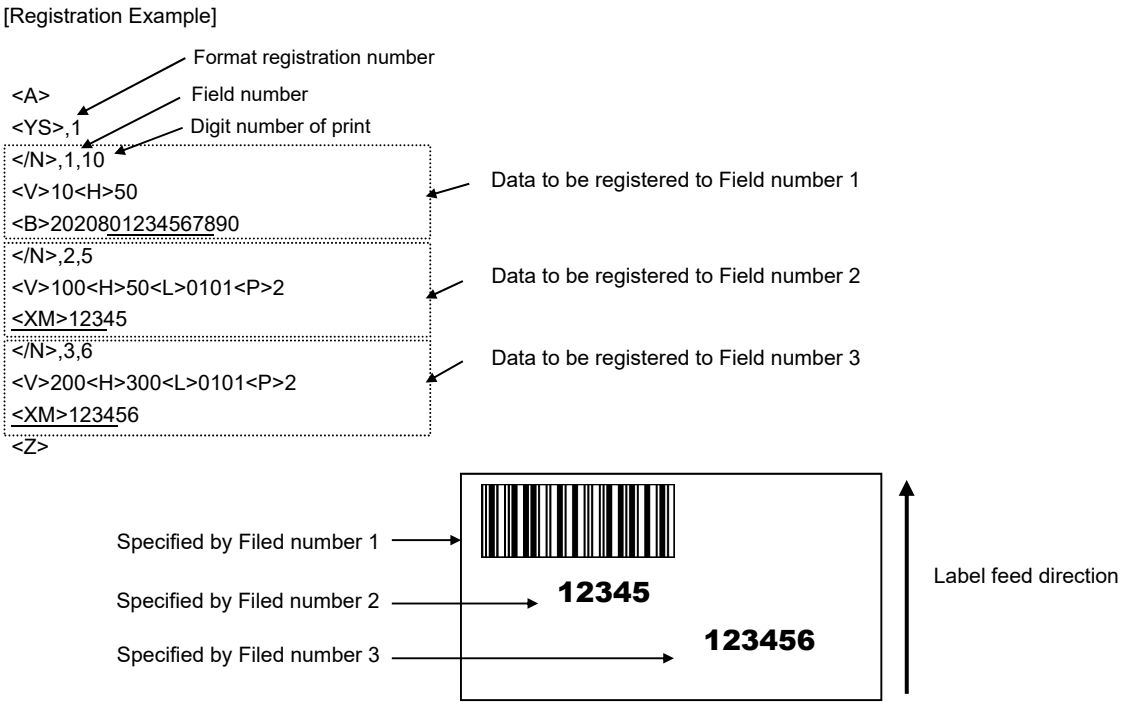

  Invoking the registered print contents
  Specify saved [Format registration number] between 1 and 999 with Format Call <YR>.
  To change print data, use Print of Field </D> to specify [Field number] to be changed, and continuously specify the changed print data. Note that the underlined parts in the [Registration Example] are changeable.

Calling Example

```
<A>
<YR>,1
</D>,2,ABCDE
<Q>2
<Z>
```

Format registration number to invoke

Field number of print data to be changed

Data to be changed

Available registration commands are as follows.

[Available registration commands]

Print Position	<V>	<H>								
Font	<XU>	<XS>	<XM>	<XB>	<XL>	<OA>	<OB>	<RD>	<$=>	<K1>
	<K2>	<K3>	<K4>	<K5>	<K8>	<K9>	<KA>	<KB>	<KD>	<k1>
	<k2>	<k3>	<k4>	<k5>	<k8>	<k9>	<kA>	<kB>	<kD>	
	<U>	<S>	<M>	<WB>	<WL>	<X20>	<X21>	<X22>	<X24>	
	<RG>*1	<RH>*1								
Barcode	<B>	<BC>	<BG>	<BI>	<D>	<D><d>	<BD>	<BW>		
Modification	<P>	<L>	<PS>	<PR>	<%>	<FW>	<(>	<WD>	<KC>	
System	<A1>	<A3>								
Memory Card	<&R>	</N>	<GR>	<GC>						

*1 Character code: UNICODE(UTF-16BE) is not supported.

Note

- The operation when registering a command other than available command is not guaranteed.

[ESC+/N] Registration of Field

Hexadecimal code	ESC	/N	Parameter
	<1B>$_{16}$	<2F>$_{16}$<4E>$_{16}$	,aa,bb
Initial value	None		

Valid range and term of command	When the power is OFF	The set parameter is not maintained.
	Valid range within items	The set parameter is valid until the next specification is made.
	Valid range between items	The set parameter is valid until the next specification is made.

[Function]

Registering items within the field of Format Registration <YS>.

[Format]

</N>,aa,bb

- Parameter

  a [Field number] = Valid Range : 1 to 99
  b [Digit number of print] = Valid Range : 1 to 99

[Coding Example]

```
<A>
<CC>1
<YS>,1
</N>,1,3
<%>0<V>100<H>200<P>2<L>0101<XM>ABC
</N>,2,5
<%>0<V>200<H>200<P>2<L>0101<OA>12345
</N>,3,8
<%>0<V>300<H>40<B>40208049123456
<Z>
```

[Supplementary Explanation]

- Specify the value of [Field number] in ascending order.
- Specify Vertical Print Position <V> and Horizontal Print Position <H> for each field. If not, initial value will be set.
- Specification of digit number when printing external character.

  External code H, one external character has 4 digits; thus, three external characters make 12 digits for printing.
  External code B, one external character has 2 digits; thus, three external characters make 6 digits for printing.
- Use this command and Format Registration <YS> as a pair.
- Due to the memory capacity limit, it may not save up to 99 registries.
- The error occurs when specifying unused or specifying the slot which this product is allocated.

[Notes]

- Do not power off this product when accessing to the memory. When this product is turned off while memory accessing, the data in the accessed media may be corrupted.

[Designable Commands for the Change of Print]

Font	<XU>	<XS>	<XM>	<XB>	<XL>	<OA>	<OB>	<RD>	<$=>	<K1>
	<K2>	<K3>	<K4>	<K5>	<K8>	<K9>	<KA>	<KB>	<KD>	<k1>
	<k2>	<k3>	<k4>	<k5>	<k8>	<k9>	<kA>	<kB>	<kD>	
	<X20>	<X21>	<X22>	<X23>	<X24>	<RG>*1	<RH>*1			
Modification	<P>	<L>	<PS>	<PR>	<%>					
Barcode	<B>	<BC>	<BG>	<BI>	<D>	<D><d>	<BD>	<BW>	<BL>	

*1 Character code: UNICODE(UTF-16BE) is not supported.

[ESC+YR] Format Call

Hexadecimal code	ESC	YR	Parameter
	<1B>$_{16}$	<59>$_{16}$<52>$_{16}$	,aaa
Initial value	None		

Valid range and term of command	When the power is OFF	The set parameter is not maintained.
	Valid range within items	The set parameter is valid until the next specification is made.
	Valid range between items	The set parameter is valid until the next specification is made.

[Function]

Invoking and printing out the format registered with Format Registration <YS>.

[Format]

<YR>,aaa

- Parameter

  a [Format registration Number] = Valid Range : 1 to 999

[Coding Example]

```
<A>
<CC>1
<YR>,1
</D>,1,DEF
</D>,2,78901
</D>,3,49000238
<Q>2
<Z>
```

[Supplementary Explanation]

- This command cannot invoke multiple formats between Start Code <A> and Stop Code <Z>.
- Use this command and Print of Field </D> as a pair.
- The error occurs when specifying unused or specifying the slot which this product is allocated.

[Notes]

- Do not power off this product when accessing to the memory. When this product is turned off while memory accessing, the data in the accessed media may be corrupted.

[ESC+/D] Print of Field

Hexadecimal code	ESC	/D	Parameter
	<1B>$_{16}$	<2F>$_{16}$<44>$_{16}$	,aa,n...n
Initial value	None		

Valid range and term of command	When the power is OFF	The set parameter is not maintained.
	Valid range within items	The set parameter is valid until the next specification is made.
	Valid range between items	The set parameter is valid until the next specification is made.

[Function]

Invoking the items registered with Registration of Field and specifying data.

[Format]

</D>,aa,n...n

- Parameter

  a [Field number] = Valid Range : 1 to 99
  n [Data] = Data to be changed

[Coding Example]

<A>
<CC>1
<YR>,1
</D>,1,DEF
</D>,2,78901
</D>,3,49000238
<Q>2
<Z>

[Supplementary Explanation]

- Digit number of print is valid within the range specified with Registration of Field </N>.
- When digit number of this command is larger than the one specified with Registration of Field </N>, only the defined digit No. will be available for printing.
- Use this command and Format Call <YR> as a pair.
- The error occurs when specifying unused or specifying the slot which this product is allocated.

[Notes]

- Do not power off this product when accessing to the memory. When this product is turned off while memory accessing, the data in the accessed media may be corrupted.

[ESC+GI] Registration of Graphic

Hexadecimal code	ESC	GI	Parameter
	<1B>$_{16}$	<47>$_{16}$<49>$_{16}$	abbbcccdddn...n
Initial value	None		

Valid range and term of command	When the power is OFF	The set parameter is not maintained.
	Valid range within items	The set parameter becomes invalid.
	Valid range between items	The set parameter becomes invalid.

[Function]

Specifying the registration of graphic pattern data.

[Format]

<GI>abbbcccdddn...n

- Parameter

  a [Selection of data transfer in HEX or BIN]
  H : Hex data
  B : Binary data

  Hex data (Divide 8 bits data into 4 bits and outputs it as hex code corresponding to ASCII)
  Binary data (Output 8 bits data as one character data all at once)

  b [Specification of crosswise graphic area per byte] = Refer to [Specified Range] section below.
  c [Specification of lengthwise graphic area per byte] = Refer to [Specified Range] section below.
  d [Registration number] (Identification number when invoking) = Valid range : 1 to 999
  n [Data] = Graphic data

[Coding Example 1]

[H: HEX data] is specified for [Data specification by HEX and BIN]

[□] is registered to the 999th of the slot 1 by the below.

<A>
<CC>1
<GI>H001001999<4646383138313831383138313831383146 46>$_{16}$
<Z>

[Coding Example 2]

[B: Binary data] is specified for [Data specification by HEX and BIN]

[□] is registered to the 999th of the slot 1 by the below.

<A>
<CC>1
<GI>B001001999<FF818181818181FF>$_{16}$
<Z>

[Supplementary Explanation]

- Specify slot number registered with Card Slot for Use <CC> prior to this command <GI> by all means.
- Specify registered data only.
- To change the registered content, clear it with Clear <*> to re-register.
- Graphic Call <GR> is for printing out the data registered with Registration of Graphic <GI>.
- When data is not registered properly, print error may occur.

  For details of data format, refer to Graphic Print <G>.
- The error occurs when specifying unused or specifying the slot which this product is allocated.

[Notes]

- Do not power off this product when accessing to the memory. When this product is turned off while memory accessing, the data in the accessed media may be corrupted.

[Specified Range]

Head density	Maximum byte in horizontal direction	Maximum byte in vertical direction
203 dpi	104	400
305 dpi	156	600
609 dpi	312	999

[ESC+GR] Graphic Call

Hexadecimal code	ESC	GR	Parameter
	<1B>$_{16}$	<47>$_{16}$<52>$_{16}$	aaa
Initial value	None		

Valid range and term of command	When the power is OFF	The set parameter is not maintained.
	Valid range within items	The set parameter becomes invalid.
	Valid range between items	The set parameter becomes invalid.

[Function]

Invoking and printing out the data registered with Registration of Graphic <GI>.

[Format]

<GR>aaa

- Parameter

  a [Registration Number] = Valid range: 1 to 999

[Coding Example]

```
<A>
<V>100<H>100
<CC>1
<GR>1
<Q>1
<Z>
```

[Supplementary Explanation]

- Specify slot number registered with Card Slot for Use <CC> prior to this command <GR> by all means.
- Ignoring Base Reference Point <A3> and making no correction.
- Rotation <%> and Enlargement <L> are available for the invoked graphic.
- The error occurs when specifying unused or specifying the slot which this product is allocated.

[Notes]

- Do not power off this product when accessing to the memory. When this product is turned off while memory accessing, the data in the accessed media may be corrupted.

[ESC+GT] BMP File Registration

Hexadecimal code	ESC	GT	Parameter
	<1B>$_{16}$	<47>$_{16}$<54>$_{16}$	aaa,bbbbb,n...n
Initial value	None		

Valid range and term of command	When the power is OFF	The set parameter is not maintained.
	Valid range within items	The set parameter becomes invalid.
	Valid range between items	The set parameter becomes invalid.

[Function]

Specifying the registration of BMP file created by such as Image editing application.

[Format]

<GT>aaa,bbbbb,n...n

- Parameter

  a [Registration number]
  Valid Range : 1 to 999
  b [Total bytes of BMP file]
  Valid Range : 1 to 99999
  Specify the file size of BMP file for total bytes.
  n [Data] = BMP file data
  Data is sent as binary data (Outputs 8 bits as one character data all at once)

[Coding Example]

<A>
<CC>1
<GT>1,12345,<424D00～00>$_{16}$
<Z>

[Supplementary Explanation]

- Specify slot number registered with Card Slot for Use <CC> prior to this command <GT> by all means.
- Data is sent in binary data (Outputs 8 dots as one byte in binary all at once). In this case, file size of BMP file becomes the total bytes, and BMP file data becomes data.
- When [Total bytes of BMP file] is not matching the transfer data, this may become the cause of malfunction.
- Total bytes are the file size displayed at [Property] and such.
- BMP file is available in Black/White mode only. In color mode, printing is not guaranteed.

  Also, this command is not valid for BMP compressed file. Make sure that the file extension is set to [BMP] before printing.
- The error occurs when specifying unused or specifying the slot which this product is allocated.

[Notes]

- Do not power off this product when accessing to the memory. When this product is turned off while memory accessing, the data in the accessed media may be corrupted.

[ESC+GC] BMP File Call

Hexadecimal code	ESC	GC	Parameter
	<1B>$_{16}$	<47>$_{16}$<43>$_{16}$	aaa
Initial value	None		

Valid range and term of command	When the power is OFF	The set parameter is not maintained.
	Valid range within items	The set parameter becomes invalid.
	Valid range between items	The set parameter becomes invalid.

[Function]

Invoking and printing out the data registered with Registration of BMP File <GT>.

[Format]

<GC>aaa

- Parameter

  a [Registration Number] = Valid range: 1 to 999

[Coding Example]

<A>
<V>100<H>100
<CC>1
<GC>1
<Q>2
<Z>

[Supplementary Explanation]

- Specify slot number registered with Card Slot for Use <CC> prior to this command <GC> by all means.
- Rotation <%> and Enlargement <L> are available for the invoked data.
- The error occurs when specifying unused or specifying the slot which this product is allocated.

[Notes]

- Do not power off this product when accessing to the memory. When this product is turned off while memory accessing, the data in the accessed media may be corrupted.

[ESC+PI] PCX File Registration

Hexadecimal code	ESC	PI	Parameter
	<1B>$_{16}$	<50>$_{16}$<49>$_{16}$	aaa,bbbbb,n...n
Initial value	None		

Valid range and term of command	When the power is OFF	The set parameter is not maintained.
	Valid range within items	The set parameter becomes invalid.
	Valid range between items	The set parameter becomes invalid.

[Function]

Specifying the registration of PCX file created by such as Image editing application.

[Format]

<PI>aaa,bbbbb,n...n

- Parameter

  a [Registration number]
  Valid Range : 1 to 999
  b [Total bytes of PCX file]
  Valid Range : 1 to 99999
  * Specify the file size of PCX file for total bytes.
  n [Data] = PCX file data
  * Data is sent as binary data (Outputs 8 bits as one character data all at once)

[Coding Example]

<A>
<CC>1
<PI>001,12345,n...n
<Z>

[Supplementary Explanation]

- Specify slot number registered with Card Slot for Use <CC> prior to this command <PI> by all means.
- Data is sent as binary data (Outputs 8 bits as one font data all at once). Total bytes is PCX file size and Data is PCX file data.
- In PCX file, 128 bytes of data is for the header part and the rest of data is for the image data.
- When [Total bytes of PCX file] is not matching the transfer data, this may become the cause of malfunction.
- Total bytes are the file size displayed at [Property] and such.
- PCX file is available in Black/White mode only. In color mode, printing will not be performed due to command error. Also, this command is not valid for PCX compressed file. Make sure that the file extension is set to [PCX] before printing.
- The error occurs when specifying unused or specifying the slot which this product is allocated.

[Notes]

- Do not power off this product when accessing to the memory. When this product is turned off while memory accessing, the data in the accessed media may be corrupted.

[ESC+PY] PCX File Call

Hexadecimal code	ESC	PY	Parameter
	<1B>$_{16}$	<50>$_{16}$<59>$_{16}$	aaa
Initial value	None		

Valid range and term of command	When the power is OFF	The set parameter is not maintained.
	Valid range within items	The set parameter becomes invalid.
	Valid range between items	The set parameter becomes invalid.

[Function]

Invoking and printing out the data registered with PCX File Registration <PI>.

[Format]

<PY>aaa

- Parameter

  a [Registration Number] = Valid range: 1 to 999

[Coding Example]

<A>
<V>100<H>100
<CC>1
<PY>001
<Q>2
<Z>

[Supplementary Explanation]

- Specify slot number registered with Card Slot for Use <CC> prior to this command <PY> by all means.
- Rotation <%> and Enlargement <L> are available for the invoked data.
- The error occurs when specifying unused or specifying the slot which this product is allocated.

[Notes]

- Do not power off this product when accessing to the memory. When this product is turned off while memory accessing, the data in the accessed media may be corrupted.

[ESC+*] Memory Card Clear

Hexadecimal code	ESC	*	Parameter
	<1B>$_{16}$	<2A>$_{16}$	a(,bbb)
Initial value	None		

Valid range and term of command	When the power is OFF	The set parameter is not maintained.
	Valid range within items	The set parameter becomes invalid.
	Valid range between items	The set parameter becomes invalid.

[Function]

Clearing the entire contents in memory card (option).

[Format]

<*>a(,bbb)

- Parameter

a [Item to be cleared]
G : SATO Graphic
(Clearing graphic registered with Registration of Graphic <GI>)
P : PCX file
(Clearing PCX file registered with Registration of PCX File <PI>)
M : BMP file
(Clearing BMP file registered with Registration of BMP File <GT>)
F : Format
(Clearing format registered with Registration of Format <YS>)
O : TrueType font
(Clearing TrueType font registered with Registration of TrueType Font <BJ>)
R : Form Overlay
(Clearing form overlay registered with Registration of Form Overlay <&S>)

b [Registration No.] = Valid range :
000 to 999 (Omissible) TrueType font
001 to 999 (Omissible) Except TrueType font
(When omitting Registration No., all the registered data will be cleared.)

[Coding Example 1]

Clearing 001 of SATO graphic

<A>
<CC>1
<*>G,001
<Z>

[Coding Example 2]

Clearing 002 of PCX file

<A>
<CC>1
<*>P,002
<Z>

[Coding Example 3]

Clearing Form Overlay entirely

<A>
<CC>1
<*>R
<Z>

[Supplementary Explanation]

- Delimit Start Code <A> and Stop Code <Z> with this command <*> for use.
- Specify slot number registered with Card Slot for Use <CC> prior to this command <*> by all means.

[Points]

- To clear all data of memory card, use Memory Card Initialization <BJF>.

[Precautions during use]

- Do not power off this product when accessing to the memory. When this product is turned off while memory accessing, the data in the accessed media may be corrupted.

[ESC+T1] Memory Card 16 x 16 dots External Font Registration

Hexadecimal code	ESC	T1	Parameter
	<1B>$_{16}$	<54>$_{16}$<31>$_{16}$	abbn...n
Initial value	None		

Valid range and term of command	When the power is OFF	The registered data become valid.
	Valid range within items	The set parameter becomes invalid.
	Valid range between items	The set parameter becomes invalid.

[Function]

Registering 16 x 16 dots external fonts in the memory card.

[Format]

<T1>abbn...n

- Parameter

a [Registration data selection]
H : HEX character
B : Binary code

b [Registration font code address]
Using Kanji set <KS> command to set Japanese (0,1,2)
JIS code
H : Up to 95 registrations from "21" to "7F" is available.
B : Up to 95 registrations from 21H to 7FH is available.
Shift JIS code
H : Up to 95 registrations from "40" to "9E" is available.
B : Up to 95 registrations from 40H to 9EH is available.
Unicode
H : Up to 95 registrations from "00" to "5E" is available.
B : Up to 95 registrations from 00H to 5EH is available.
Using Kanji set <KS> command to set other than Japanese
(3 (China Simplified Chinese), 5 (China Traditional Chinese), 6 (Korean))
H : Up to 95 registrations from "21" to "7F" is available.
B : Up to 95 registrations from 21H to 7FH is available.

n [Registered external font data]

[Coding Example]

<A>
<CC>1
<u><T1>H2100FF00FF to 3C0000FF</u>
<Z>

[Supplementary Explanation]

- Overwriting registration data is available.
- Specify slot registered with Card Slot for Use <CC> prior to this command <T1> by all means.
- The code to specify in the registration font code address needs to match the Kanji set (<KS>) and Kanji code (<KC>).
- When use <T1> with another registration command, it may occur error because of capacity shortage of the memory card.

  In this case, register another command in another memory card, or use a memory card having bigger capacity.
- Data output is as follows.

External file [16x16]

D1	D2
D3	D4
D5	D6
|	|
D31	D32

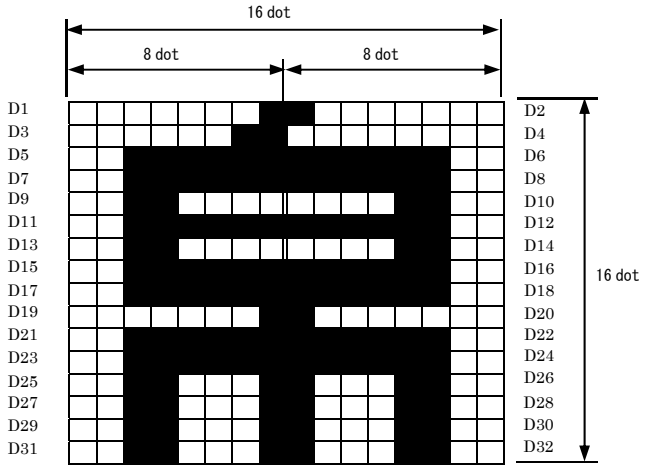

When registering the external characters described above, D1 data becomes <01>$_{16}$ and D2 data becomes <80>$_{16}$ because D1 consists of [00000001], D2 consists of [10000000].
In the same manner, D3 is <03>$_{16}$, D4 is <00>$_{16}$, D5 is <3F>$_{16}$, D6 is <FC>$_{16}$, and the external registration data will be <018003003FFC…..>$_{16}$ up to D32.

[Notes]

- Do not power off this product when accessing to the memory. When this product is turned off while memory accessing, the data in the accessed media may be corrupted.

[ESC+T2] Memory Card 24 x 24 dots External Font Registration

Hexadecimal code	ESC	T2	Parameter
	$<1B>_{16}$	$<54>_{16}<32>_{16}$	abbn...n
Initial value	None		

Valid range and term of command	When the power is OFF	The registered data become valid.
	Valid range within items	The set parameter becomes invalid.
	Valid range between items	The set parameter becomes invalid.

[Function]

Registering 24 x 24 dots external fonts in the memory card.

[Format]

<T2>abbn...n

- Parameter

a [Registration data selection]
H : HEX character
B : Binary code

b [Registration font code address]
Using Kanji set <KS> command to set Japanese (0,1,2)
JIS code
H : Up to 95 registrations from "21" to "7F" is available.
B : Up to 95 registrations from 21H to 7FH is available.
Shift JIS code
H : Up to 95 registrations from "40" to "9E" is available.
B : Up to 95 registrations from 40H to 9EH is available.
Unicode
H : Up to 95 registrations from "00" to "5E" is available.
B : Up to 95 registrations from 00H to 5EH is available.
Using Kanji set <KS> command to set other than Japanese
(3 (China Simplified Chinese), 5 (China Traditional Chinese), 6 (Korean))
H : Up to 95 registrations from "21" to "7F" is available.
B : Up to 95 registrations from 21H to 7FH is available.

n [Registered external font data]

[Coding Example]

<A>
<CC>1
<u><T2>H2100FF00FF to 3C0000FF</u>
<Z>

[Supplementary Explanation]

- Overwriting registration data is available.
- Specify slot registered with Card Slot for Use <CC> prior to this command <T2> by all means.
- The code to specify in the registration font code address needs to match the Kanji set (<KS>) and Kanji code (<KC>).
- When use <T2> with another registration command, it may occur error because of capacity shortage of the memory card. In this case, register another command in another memory card, or use a memory card having bigger capacity.
- Data output is as follows.

外字ファイル「24×24」

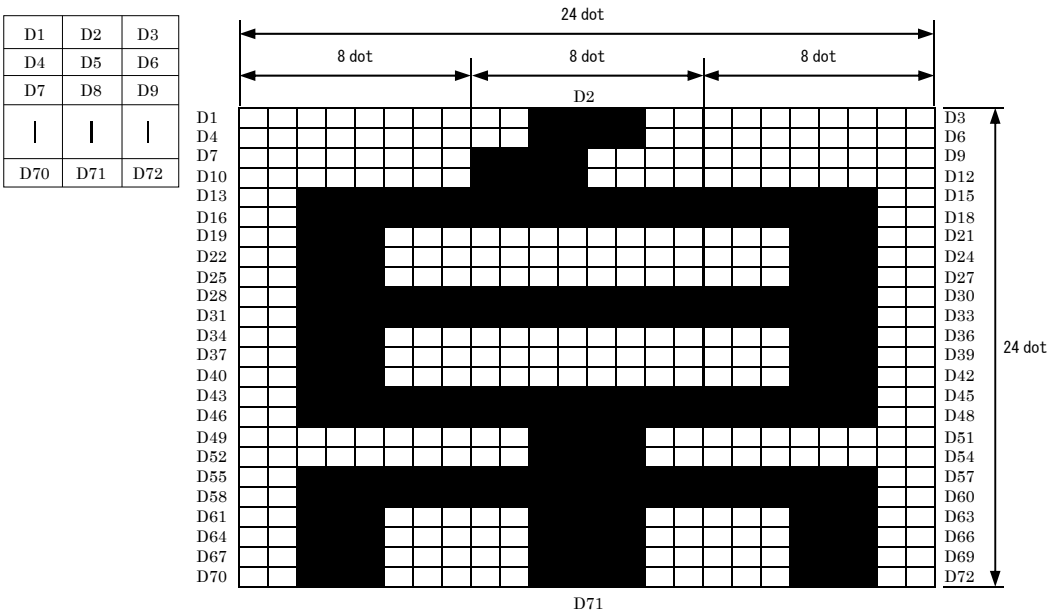

When registering the external characters described above, D1 data becomes <00>$_{16}$ and D2 data becomes <3C>$_{16}$ and D3 data becomes <00>$_{16}$ because D1 consists of [00000000], D2 consists of [00111100] and D3 consists of [00000000].
In the same manner, D4 is <00>$_{16}$, D5 is <3C>$_{16}$, D6 is <00>$_{16}$, and the external registration data will be <003C00003C00…..>$_{16}$ up to D72.

[Notes]

- Do not power off this product when accessing to the memory. When this product is turned off while memory accessing, the data in the accessed media may be corrupted.

[ESC+K1(K2)] Horizontal Writing External Font Call

Hexadecimal code	ESC	K1(K2)	Parameter
	<1B>$_{16}$	<48>$_{16}$<31>$_{16}$ (<48>$_{16}$<32>$_{16}$)	an...n
Initial value	None		

Valid range and term of command	When the power is OFF	The registered data is not maintained.
	Valid range within items	The set parameter becomes invalid.
	Valid range between items	The set parameter becomes invalid.

[Function]

Specifying call of external fonts registered in memory card.

[Format]

<K1>an...n

<K2>an...n

- Parameter

a [External font registration]
H : HEX character
B : Binary code
I : HEX character letters, smoothing function
C : Binary code, smoothing function
J : HEX character letters, highlight function
D : Binary code, highlight function
K : HEX character letters, smoothing and highlight function
E : Binary character letters, smoothing and highlight function

n...n [Registration code]
Using Kanji set <KS> command to set Japanese (0,1,2)
JIS code
H, I, J, K: "9021" to "907F"
B, C, D, E: 9021H to 907FH
Shift JIS code
H, I, J, K: "F040" to "F09E"
B, C, D, E: F040H to F09EH
Unicode (UTF-16)
H, I, J, K: "E000" to "E05E"
B, C, D, E: E000H to E05EH
Unicode (UTF-8)(UTF-16 E000 to E05E expressed in UTF-8)
H, I, J, K: "EE8080" to "EE819E"
B, C, D, E: EE8080H to EE819EH

Using Kanji set <KS> command to set other than Japanese
(3 (China Simplified Chinese), 5 (China Traditional Chinese), 6 (Korean))
GB18030, BIG5, KSC5601(EUC-KR) code
H, I, J, K: "8021" to "807F"
B, C, D, E: 8021H to 807FH
Unicode (UTF-8)(UTF-16 E000 to E05E expressed in UTF-8)
H, I, J, K: "EE8080" to "EE819E"
B, C, D, E: EE8080H to EE819EH

[Coding Example]

```
<A>
<KS>0
<KC>0
<CC>1
<V>100<H>100
<K1>H9021
<Q>2
<Z>
```

[Supplementary Explanation]

- Specify slot registered with Card Slot for Use <CC> prior to this command <K1> by all means.
- Valid data of registration code vary according to the Kanji set command <KS>.

[Notes]

- Do not power off this product when accessing to the memory. When this product is turned off while memory accessing, the data in the accessed media may be corrupted.

[ESC+k1(k2)] Vertical Writing External Font Call

Hexadecimal code	ESC	k1(k2)	Parameter
	$<1B>_{16}$	$<6B>_{16}<31>_{16}$ ($<6B>_{16}<32>_{16}$)	an...n
Initial value	None		

Valid range and term of command	When the power is OFF	The registered data is not maintained.
	Valid range within items	The set parameter becomes invalid.
	Valid range between items	The set parameter becomes invalid.

[Function]

Specifying call of external fonts registered in memory card.

[Format]

<k1>an...n

<k2>an...n

- Parameter

a [External font registration]
H : HEX character
B : Binary code
I : HEX character letters, smoothing function
C : Binary code, smoothing function
J : HEX character letters, highlight function
D : Binary code, highlight function
K : HEX character letters, smoothing and highlight function
E : Binary character letters, smoothing and highlight function

b [Registration code]
Using Kanji set <KS> command to set Japanese (0,1,2)
JIS code
H, I, J, K: "9021" to "907F"
B, C, D, E: 9021H to 907FH
Shift JIS code
H, I, J, K: "F040" to "F09E"
B, C, D, E: F040H to F09EH
Unicode (UTF-16)
H, I, J, K: "E000" to "E05E"
B, C, D, E: E000H to E05EH
Unicode (UTF-8)(UTF-16 E000 to E05E expressed in UTF-8)
H, I, J, K: "EE8080" to "EE819E"
B, C, D, E: EE8080H to EE819EH
Using Kanji set <KS> command to set other than Japanese
(3 (China Simplified Chinese), 5 (China Traditional Chinese), 6 (Korean))
GB18030, BIG5, KSC5601(EUC-KR) code
H, I, J, K: "8021" to "807F"
B, C, D, E: 8021H to 807FH
Unicode (UTF-8)(UTF-16 E000 to E05E expressed in UTF-8)
H, I, J, K: "EE8080" to "EE819E"
B, C, D, E: EE8080H to EE819EH

[Coding Example]

<A>
<KS>0
<KC>0
<CC>1
<V>100<H>100
<k1>H9021
<Q>2
<Z>

[Supplementary Explanation]

- Specify slot registered with Card Slot for Use <CC> prior to this command <k1> by all means.
- Valid data of registration code vary according to the Kanji set command <KS>.

[Notes]

- Do not power off this product when accessing to the memory. When this product is turned off while memory accessing, the data in the accessed media may be corrupted.

[ESC+BJ ESC+BJD] TrueType Font Registration (Compatible command)

Hexadecimal code	ESC	BJ BJD	Parameter
	$<1B>_{16}$	$<42>_{16}<4A>_{16}$ $<42>_{16}<4A>_{16}<44>_{16}$	(a...ab...b c ...cdddde...e)
Initial value	None		

Valid range and term of command	When the power is OFF	The set parameter is not maintained.
	Valid range within items	The set parameter becomes invalid.
	Valid range between items	The set parameter becomes invalid.

[Function]

Specifying registration of TrueType Font.

[Format]

<BJ>(a...ab...b

<BJD>c ...cdddde...e

<BJ>)

- Parameter

  a [Font description] 40 byte font
  b [Date] 10 bytes date data
  c [Memory offset] 5 bytes memory offset (HEX)
  d [Number of data bytes] Valid Range = 0001 to 9999
  e [Font data to download]

[Coding Example]

Font= ‘abcdefghijabcdefghijabcdefghijabcdefghij’ ,Date data=29-08-2010, Memory offset=0000000220_{16}, Number of data bytes=3001, Font data= ‘A00490020….00000000’

<A>
<CC>1
<BJ>(abcdefghijabcdefghijabcdefghijabcdefghij29-08-2010
<BJD>00000002203001A00490020.....0000000
<BJ>)
<Z>

[Supplementary Explanation]

- Specify the card slot number used for Card Slot <CC> prior to this command.

[Notes]

- Do not power off this product when accessing to the memory. When this product is turned off while memory accessing, the data in the accessed media may be corrupted.
- This command is for the compatibility with the old specification. Recommend the use of [DC2]DE and <RH>.

[ESC+BJT] TrueType Font Call (Compatible command)

Hexadecimal code	ESC	BJT	Parameter
	<1B>$_{16}$	<42>$_{16}$<4A>$_{16}$<54>$_{16}$	,aa,bb,cc,dd,ee,ffff,n...n
Initial value	None		

Valid range and term of command	When the power is OFF	The set parameter is not maintained.
	Valid range within items	The set parameter becomes invalid.
	Valid range between items	The set parameter becomes invalid.

[Function]

Specifying TrueType Font call.

[Format]

<BJT>,aa,bb,cc,dd,ee,ffff,n...n

- Parameter

  a [Font ID] = Valid Range : 00 to 99
  b [Horizontal scale factor] = Valid Range : 01 to 12
  c [Vertical scale factor] = Valid Range : 01 to 12
  d [Word Pitch] = Valid Range : 00 to 99
  e [Reserve] = Valid Range : 00 (Fixed)
  f [Reserve] = Valid Range : 0000 (Fixed)
  n [Data]

[Coding Example]

<A>
<V>100<H>200<CC>1
<u><BJT>,01,02,02,01,00,0004SATO</u>
<Q>
<Z>

[Supplementary Explanation]

- Specify the card slot number used for Card Slot <CC> prior to this command.

[Notes]

- Do not power off this product when accessing to the memory. When this product is turned off while memory accessing, the data in the accessed media may be corrupted.
- This command is for the compatibility with the old specification. Recommend the use of [DC2]DE and <RH>.

Intelligent Command

[ESC+IK] Label Feed Control

Hexadecimal code	ESC	IK	Parameter
	<1B>$_{16}$	<49>$_{16}$<4B>$_{16}$	a(,bbbb)
Initial value	None		

Valid range and term of command	When the power is OFF	The set parameter is not maintained.
	Valid range within items	The set parameter becomes invalid.
	Valid range between items	The set parameter becomes invalid.

[Function]

Feeding forward or backward for the specified distance (unit: dot).

[Format]

<IK>a(,bbbb)

- Parameter

a [Feed direction]
0 : Forward feed
1 : Backfeed
b [Feed length]
Valid range : Refer to [Valid Range] section below.
Only “Forward feed” (a=0) is omissible.
Feeds one label when omitting this parameter.

[Coding Example 1]

When 120 dots feeding forward the media

<A>
<IK>0,120
<Z>

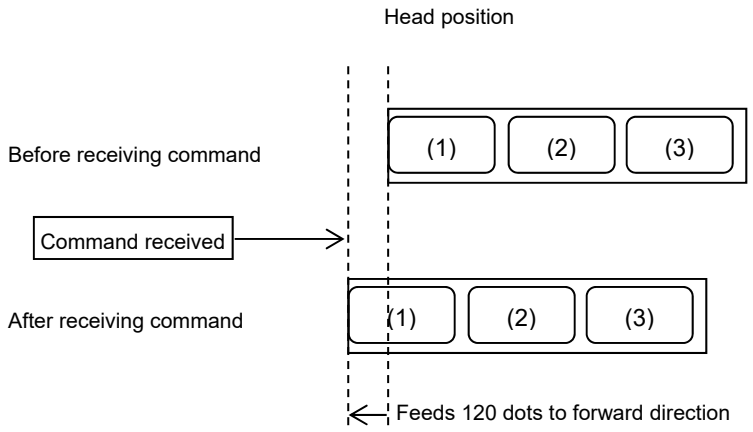

When print data is received without returning to the original position with <IK>1,120, printing will start from the current stop position.

[Coding Example 2]

When feeding one label

<A>
<IK>0
<Z>

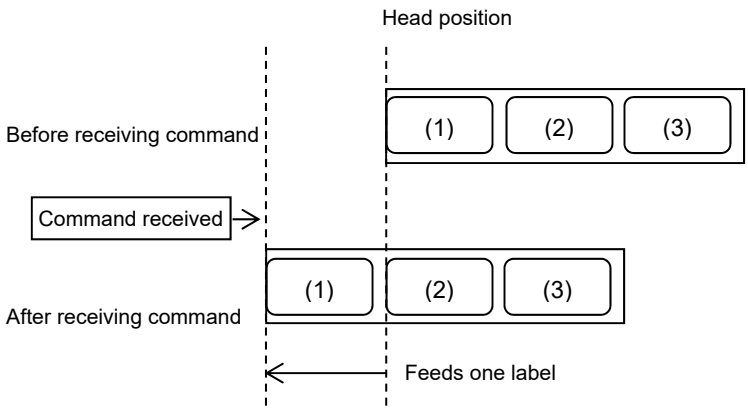

[Supplementary Explanation]

- Delimit Start Code <A> and Stop Code <Z> with this command. When specifying this command with the same item as print data, the command will be ignored.
- When setting [Feed direction] to [1: Backfeed], length of label feed needs to be checked. If this length is very long, it may cause overlapped prints or label may fall off the platen and result in detection error as paper-end.
- When omitting [Feed length] in forward feed, product motion will be similar to label feed motion when pressing the FEED key in offline state.
- Label feed motion with this command will be activated at the time of online.
- When omitting [Feed length] in backfeed, label feed will not be performed due to command error.
- When the specified feed value is outside of valid range, printing will not be performed due to command error.
- Actual feed distance may be different from the set value according to the individual difference of each product, supplies and operating environment. Recommend to adjust the feed value before operation.
- When setting [Thermal transfer] to [Print method], length of label backfeed needs to be under 30mm. If 30 mm or more is specified, it may result in detection error as ribbon end. And also, avoid consecutive specification of label feed command for backfeed.
- In tear-off, cutter and dispenser mode, do not attempt to backfeed right after tearing-off, cutting and dispensing label.
- Control of feed motion by external signal is not available.
- When the sensor is disabled, <IK>0 (Forward feed) will not feed labels.
- The valid feeding range in the backward direction is from 6 mm to 60 mm. The command error occurs when the feeding length is out of range and the media is not fed.
- Do not carry paper in the reverse direction when the paper is not ejected by cut-print mode.

[Valid Range]

Head density	Media feed direction = Forward direction feed length (dots)	Media feed direction = Backward direction feed length (dots)
203 dpi	48 to 1600	48 to 480

Head density	Media feed direction = Forward direction feed length (dots)	Media feed direction = Backward direction feed length (dots)
305 dpi	72 to 2400	72 to 720
609 dpi	144 to 4800	144 to 1440

XML Commands

[ESC+/Y] Register Print Template Name

Hexadecimal code	ESC	/Y	Parameter
	<1B>$_{16}$	<2F>$_{16}$< 59>$_{16}$	,n...n
Initial value	None		

Valid range and term of command	When the power is OFF	The set parameter is maintained.
	Valid range within items	The set parameter is invalid until the next valid setting.
	Valid range between items	The set parameter is invalid until the next valid setting.

[Function]

Registering the Print Template name with the memory of this product.

[Format]

</Y>,n...n

- Parameter

  n~n [Print Template name] = Valid range : 1 to 32 ASCII characters

[Coding Example]

```
<A>
<CC>1
<YS>,1
</Y>,Material Label
</X>,14,10,ProductID
<%>0<V>100<H>200<P>2<L>0101<XM>
<Z>
```

[Supplementary Explanation]

- Only first 32 characters of the print template name will be registered into the memory of this product.
- The character "," (HEX: 2C) is not allowed in template name registration.
- This command must be used together with the <YS> command.
- This command is valid in slot command <CC1> or <CC2> occasion. It will result error in other memory slot setting.

[ESC+/X] Set XML Variable Name

Hexadecimal code	ESC	/X	Parameter
	<1B>$_{16}$	<2F>$_{16}$< 58>$_{16}$	,a,b,n...n
Initial value	a=0		

Valid range and term of command	When the power is OFF	The set parameter is maintained.
	Valid range within items	The set parameter becomes invalid.
	Valid range between items	The set parameter becomes invalid.

[Function]

Setting the XML variable field name for the format field number.

[Format]

</X>,a,b,n...n

- Parameter

  a [Field number] = 01 - 99
  b [Max field length] = 01 - 99
  n~n [Print Template name] = Up to 60 ASCII characters

[Coding Example]

Assign XML variable name ProductID to the field number 14. Maximum input field length: up to 10 characters

<A>
<CC>1
<YS>,1
</Y>,Material Label
</X>,14,10,ProductID
<%>0<V>100<H>200<P>2<L>0101<XM>
<Z>

[Supplementary Explanation]

- This command should be used together with the template format registration command <YS>.
- Please refer to valid command list from Registration of Field command </N>.

[ESC+/R] Remove Print Template

Hexadecimal code	ESC	/R	Parameter
	<1B>$_{16}$	<2F>$_{16}$< 52>$_{16}$	,a,n...n
Initial value	a=0		

Valid range and term of command	When the power is OFF	The set parameter is maintained.
	Valid range within items	The set parameter becomes invalid.
	Valid range between items	The set parameter becomes invalid.

[Function]

Clearing content of XML print template registered with the memory of this product.

[Format]

</R>,a,n...n

- Parameter

  a [Remover template]
  0 : Represent by print template name
  1 : Represent by print template format number
  n...n [Print template name or format number]
  Valid range (Template name) : 1 to 32 ASCII characters
  Valid range (Format number) : 001 to 999

[Coding Example]

Clear Print Template with the template name "SATO Barcode."

<A>
<CC>1
</R>,0,SATO Barcode
<Z>

[Supplementary Explanation]

- To avoid incorrect response from this product, this command should not use in conjunction with other commands.
- This command is valid only when the desired template is registered inside the printer memory initially.
- When parameter (n...n) is not inserted or inserted wrong reference name, this </R> command will become invalid and the command is not effected.
- Parameter 'a' will be set as '0' if not assigned.
- This product will return "ACK" back to host PC if operation success. Otherwise, this product will return "NAK" to the host PC if operation fail.

[ESC+/S] Set Print Template Name

Hexadecimal code	ESC	/S	Parameter
	<1B>$_{16}$	<2F>$_{16}$< 53>$_{16}$	,aaa,n...n
Initial value	None		

Valid range and term of command	When the power is OFF	The set parameter is maintained.
	Valid range within items	The set parameter is invalid until the next valid setting.
	Valid range between items	The set parameter is invalid until the next valid setting.

[Function]

Changing the print template name that is already registered with the memory of this product.

[Format]

</S>,aaa,n...n

- Parameter

  aaa [Print template format number] = 001 - 999
  n...n [Print template name] = Valid range (Template name) : 1 to 32 ASCII characters

[Coding Example]

Change Print Template with the template name "SATO Barcode."

<A>
<CC>1
</S>,001,SATO Barcode
<Z>

[Supplementary Explanation]

- To avoid incorrect response from this product, this command should not use in conjunction with other commands.
- Only first 32 characters of the print template name will be registered into the memory of this product.
- The character "," (HEX: 2C) is not allowed in template name registration.
- This product will return "ACK" back to host PC if operation success. Otherwise, this product will return "NAK" to the host PC if operation fail.
- If the parameter "aaa" is not assigned, </S> command will be ignored.

[ESC+/G] Get Print Template Information

Hexadecimal code	ESC	/G	Parameter
	<1B>$_{16}$	<2F>$_{16}$< 47>$_{16}$	,a,n...n
Initial value	None		

Valid range and term of command	When the power is OFF	The set parameter is maintained.
	Valid range within items	The set parameter becomes invalid.
	Valid range between items	The set parameter becomes invalid.

[Function]

Recalling the print templates data or print template names from the memory of this product.

[Format]

</G>,a,n...n

- Parameter

a [Type of desired template data]
0 : Get current print template name
1 : Get all print template names
2 : Get all print templates
3 : Get standardized print template
4 : Get specific print template

n...n [Print template name]
Valid range (Template name) : 1 to 32 ASCII characters
This parameter n~n is needed when a = 4 was specified.

[Coding Example]

Recall all the registered template names from the memory of this product.

<A>
<CC>1
</G>,1
<Z>

Recall the print template with the template name “SATO Barcode”

<A>
<CC>1
</G>,4,SATO Barcode
<Z>

[Supplementary Explanation]

- To avoid incorrect response from this product, this command should not use in conjunction with other commands.
- This command is valid only when the memory of this product has at least one registered format.
- Print template name will be returned only when the desired template name is registered by </Y> command together with the <YS> commands.
- Parameter 'a' will be set as '0' if not assigned.
- For (a=1), the character ‘, ‘ (HEX: 2C) will act as separators between each reply template name. (Note: No separator will be used, if there is only one template name installed inside the memory)
- This product will return "ACK" back to host PC if operation success. Otherwise, this product will return "NAK" to the host PC if operation fail.
- In case the user gave same name to different formats, the </G>,4 command will recall the template with the smaller format number.

Common commands for all languages

The common commands are the commands independent from the applications such as SBPL, SZPL, SIPL, SCPL.

The common specifications of the common command for all languages will be described as follows.

- The structure begins from [DC2]<12>$_{16}$ and two characters follow it.
- When the two characters follow [DC2] are not the common commands, nothing will be returned and the data after that will be ignored.
- The command to specify the data size will wait the data until the data size satisfies the specified size and no data will be returned.
- When initializing, turning off and updating this product, [NAK]<15>$_{16}$ will be returned. However, the reset command and the power off command and the cancel request command can be received.
- It runs after resuming from power-save mode when this product is in power-saving mode or resuming from power-save mode, and returns [ACK]<06>$_{16}$ or [NAK]<15>$_{16}$. However, reset, power off and cancel request commands can be received.
- The common commands cannot be used when this product is set to the non-standard mode.

[DC2+PA] Printer Setting Command

Command	DC2	PA	Parameter
Hexadecimal code	$<12>_{16}$	$<50>_{16}<41>_{16}$	a…a,bb,c…c,d…d,(,ee,f…f,g…g,h…h,i…i)…
Initial value	None		

Valid range and term of command	When the power is OFF	The set parameter is maintained.
	Valid range	The set parameter is valid until the next specification is made.
	Printer operation in progress	The command cannot be received during the printer operation. ([NAK] return)
	Error	Commands cannot be received even if an error is occurring. ([NAK] return)

[Function]

Registering the printer settings.

[Format]

DC2(12H) + PA,a…a,bb,c…c,d…d,(,ee,f…f,g…g,h…h)…

Data Example)

[DC2]PA,87,CA,35,SPEED:2

LABELV:12345

LABELH:456

,SB,39,ZEROSLASH:0

SHOTAI:0

PROPORTIONAL:0

[Parameters]

Symbol	Parameter name	Valid range	Acquisition method
a	Total number of data byte * This is the total number of bytes after parameter b. The delimiting comma between parameters a and b are not included.	0 to 524277	Acquire up to ","
b(e…)	Identifier	CA: Common settings CB: Notification system II: IEEE1284 settings IR: RS-232C settings IL: LAN settings IU: USB settings IW: WLAN settings IB: Bluetooth settings IE: EXT settings IN: NFC settings SB: SBPL settings SZ: SZPL settings	Acquire fixed two-characters

Symbol	Parameter name	Valid range	Acquisition method
		SI: SIPL settings SD: SDPL settings ST: STCL settings SA: AEP settings SE: SEPL settings	
c(f…)	Data size of settings in bytes * The size of setting information is equivalent to the bytes by section from parameter d. The delimiting comma between the sections are not included.	0 to 524277	Acquire up to ","
d(g…)	Setting data * Text format * Items that need to be encrypted to perform encryption	Refer to the table of [Setting data] below.	Data size of setting information

[Setting data format]

"Name of setting item" + ":" + "Setting data" + "Line feed(0DH, 0AH)"

h…h : i…i[CR][LF](j…j : k…k[CR][LF])…

[Setting data]

Symbol	Parameter name	Valid range	Acquisition method
h(j …)	Name of setting item	See tables in [A list of setting items]	Acquire up to ":"
i(k …)	Setting data	See tables in [A list of setting items]	Acquire up to "[CR][LF]”

Data Example)

SPEED: 4

LEVEL: 5

[Return data format (normal)]

[ACK]<06>$_{16}$

[Return data format (when a command error occurs)]

[NAK]<15>$_{16}$

[Exception processing]

Parameter name	Exception condition	
	A value outside the range is specified	The specified size and received size are different
Total number of data byte	Command error	Command Error *1 *2
Identifier	Invalid identifier (skip)	Command error
Data size of settings in bytes	Command error	Command Error *3
Name of setting item	Invalid setting item (skip)	

Parameter name	Exception condition	
	A value outside the range is specified	The specified size and received size are different
Setting data	Invalid setting data (skip)	

*1 If the data size from the first identifier (bb) to the last data item does not match the data size of setting information, and the data size calculated from the format, a command error will occur.

*2 However, nothing will be returned until receiving the number of data equals to the total number of data bytes.

*3 If the data during the receipt of the setting information data size from the beginning of the setting information data is not ",", a command error occurs.

Terminology	Description
Command error	All items are not set. The data received after a command error is determined is not considered as a parameter of this command.
Invalid identifier	The corresponding setting information data (data equivalent to the succeeding setting information data size) is ignored.
Invalid item	The data of one item (data up to [CR] [LF]) is ignored.

[Supplementary information]

- If the sum of the total data size and configuration information data size does not match, an error will occur and they will not be set.
- If the data size of settings and data size of actual settings do not match, an error will occur and the value will not be set.
- Setting for each identifier and setting item can be omitted.
- Setting for each identifier and setting item can be in random order.
- When re-setting a setting with same identifier, the last value that was set will be enabled.
- If the value in setting was out of range, then the setting item will have an error and will be skipped.
- No malfunction will occur when a character string with the same name as the setting item was set.

  e.g.) When you set "DeviceName" as setting value for the setting item named "DeviceName."
- Do not send this command when this product is printing. Use this command in the standby status.

[Setting saving function]

This command proceeds the setting when the item name and the setting value were specified basically. However, the problem may occur when the setting data are set in order of receiving the data because the setting item can be omitted and set in random order. These items will be saved firstly and set after all the received data were analyzed.

The target items and their setting process are described as follows.

<table>
<tr><th>Target item</th><th>Setting process</th></tr>
<tr><td>[PRINTER] Time zone
[PRINTER] Date
[PRINTER] Time</td><td>The time zone must be set firstly because the time difference calculated from the local time is necessary for setting the date and time.</td></tr>
<tr><td>[PRINTER] Main port
[PRINTER] Sub port</td><td>Settings of the main port and sub-port cannot be duplicated, and the duplicated code will be ignored.</td></tr>
<tr><td>[BLUETOOTH]ISI
[BLUETOOTH]ISW
[BLUETOOTH]PSI
[BLUETOOTH]PSW</td><td>▪ When "ISI" is smaller than "ISW," it is not set.
▪ There is a function that when "0" is set to both "ISI" and "ISW," Bluetooth module does not respond to the search. Regarding this function, to avoid conflicting settings, setting it under following condition.
<table>
<tr><th>ISI</th><th>ISW</th><th>Process</th></tr>
<tr><td>="0"</td><td>="0"</td><td>Set</td></tr>
<tr><td></td><td>≠"0"</td><td>Do not set</td></tr>
<tr><td>≠"0"</td><td>="0"</td><td>Do not set</td></tr>
<tr><td></td><td>≠"0"</td><td>Set</td></tr>
</table>
▪ When "PSI" is smaller than "PSW," it is not set.</td></tr>
<tr><td>[BLUETOOTH] Delete pairing information</td><td>There are 10 paring information and they are arrayed. You cannot delete them one by one because the deleted area is filled with next data and the number will be inconsistent. You can delete the data when you know all the paring information to be deleted.</td></tr>
<tr><td>[SBPL]STX
[SBPL]ETX
[SBPL]ESC
[SBPL]ENQ
[SBPL]CAN
[SBPL]NULL
[SBPL]OFFLINE</td><td>Each control code cannot be duplicated, and the duplicated code will be ignored.</td></tr>
<tr><td>[SZPL] Command Head
[SZPL] Control head
[SZPL] Delimiter</td><td>Each control code cannot be duplicated, and the duplicated code will be ignored.</td></tr>
<tr><td>[SDPL]SOH
[SDPL]STX
[SDPL]CR
[SDPL]CNT</td><td>Each control code cannot be duplicated, and the duplicated code will be ignored.</td></tr>
<tr><td>[STCL] Command Head1 to 3</td><td>Each control code cannot be duplicated, and the duplicated code will be ignored.</td></tr>
</table>

[Encryption of data]

The method for encryption shall be bit inversion plus conversion of binary to ASCII. Therefore there will be twice as much data after encryption.

Table) Table of encryption code

Original		Encrypted		Original		Encrypted		Original		Encrypted	
Character	code [HEX]	Character (SJIS)	code [HEX]	Character	code [HEX]	Character (SJIS)	code [HEX]	Character	code [HEX]	Character (SJIS)	code [HEX]
Space	20	df	64 66	@	40	bf	62 66	`	60	9f	39 66
!	21	de	64 65	A	41	be	62 65	a	61	9e	39 65
"	22	dd	64 64	B	42	bd	62 64	b	62	9d	39 64
#	23	dc	64 63	C	43	bc	62 63	c	63	9c	39 63
$	24	db	64 62	D	44	bb	62 62	d	64	9b	39 62
%	25	da	64 61	E	45	ba	62 61	e	65	9a	39 61
&	26	d9	64 39	F	46	b9	62 39	f	66	99	39 39
'	27	d8	64 38	G	47	b8	62 38	g	67	98	39 38
(	28	d7	64 37	H	48	b7	62 37	h	68	97	39 37
)	29	d6	64 36	I	49	b6	62 36	i	69	96	39 36
*	2A	d5	64 35	J	4A	b5	62 35	j	6A	95	39 35
+	2B	d4	64 34	K	4B	b4	62 34	k	6B	94	39 34
,	2C	d3	64 33	L	4C	b3	62 33	l	6C	93	39 33
-	2D	d2	64 32	M	4D	b2	62 32	m	6D	92	39 32
.	2E	d1	64 31	N	4E	b1	62 31	n	6E	91	39 31
/	2F	d0	64 30	O	4F	b0	62 30	o	6F	90	39 30
0	30	cf	63 66	P	50	af	61 66	p	70	8f	38 66
1	31	ce	63 65	Q	51	ae	61 65	q	71	8e	38 65
2	32	cd	63 64	R	52	ad	61 64	r	72	8d	38 64
3	33	cc	63 63	S	53	ac	61 63	s	73	8c	38 63
4	34	cb	63 62	T	54	ab	61 62	t	74	8b	38 62
5	35	ca	63 61	U	55	aa	61 61	u	75	8a	38 61
6	36	c9	63 39	V	56	a9	61 39	v	76	89	38 39
7	37	c8	63 38	W	57	a8	61 38	w	77	88	38 38
8	38	c7	63 37	X	58	a7	61 37	x	78	87	38 37
9	39	c6	63 36	Y	59	a6	61 36	y	79	86	38 36
:	3A	c5	63 35	Z	5A	a5	61 35	z	7A	85	38 35
;	3B	c4	63 34	[	5B	a4	61 34	{	7B	84	38 34
<	3C	c3	63 33	\	5C	a3	61 33	|	7C	83	38 33
=	3D	c2	63 32	]	5D	a2	61 32	}	7D	82	38 32
>	3E	c1	63 31	^	5E	a1	61 31	~	7E	81	38 31
?	3F	c0	63 30	_	5F	a0	61 30				

[A list of setting items]

[PRINTER] section					
Name of setting item	Setting value	Initial value	R/W	Initial CA	Contents of Setting item
SPEED	"2": 2 inches/sec "3": 3 inches/sec "4": 4 inches/sec "5": 5 inches/sec "6": 6 inches/sec "7": 7 inches/sec "8": 8 inches/sec "9": 9 inches/sec "10": 10 inches/sec "11": 11 inches/sec "12": 12 inches/sec "13": 13 inches/sec "14": 14 inches/sec 203 dpi: 2-14 (Linerless: 2-6) (Dispenser: 2-10) 305 dpi: 2-14 (Linerless: 2-6) (Dispenser: 2-10) 609 dpi: 2-6 (Linerless: 2-6) (Dispenser: 2-6)	203/305 dpi : 6 (Linerless: 4) 609 dpi : 4	R/W	○	Print speed <CS>
LEVEL	"1": Darkness 1 "2": Darkness 2 "3": Darkness 3 "4": Darkness 4 "5": Darkness 5 "6": Darkness 6 "7": Darkness 7 "8": Darkness 8 "9": Darkness 9 "10": Darkness 10	5	R/W	○	Print darkness level <#F>
CONCENTRATION	"A" "B" "C" "D" "E" "F"	A	R/W	○	Print darkness <#F>
LABELV	Unit: dots 609 dpi: "1” to "9600" 305 dpi: "1” to "18000" 203 dpi: "1” to "20000"	609 dpi: 9600 305 dpi: 18000 203 dpi: 20000	R/W	○	Vertical size of label
LABELH	Unit: dots 609 dpi: "1” to "2496" 305 dpi: "1” to "1248" 203 dpi: "1” to "832"	609 dpi: 2496 305 dpi: 1248 203 dpi: 832	R/W	○	Horizontal size of label

[PRINTER] section					
Name of setting item	Setting value	Initial value	R/W	Initial CA	Contents of Setting item
PITCHOFFSET	"-99" to "99" (dots)	0	R/W	○	Continuous Offset adjust <PO>
BASEV	Unit: dots 609 dpi: "-9599” to "+9599" 305 dpi: "-17999” to "+17999" 203 dpi: "-19999” to "+19999"	0	R/W	○	Offset of vertical base reference point <A3>
BASEH	Unit: dots 609 dpi: "-2945” to "+2495" 305 dpi: "-1247” to "+1247" 203 dpi: "-831” to "+831"	0	R/W	○	Offset of horizontal base reference point <A3>
PRINT_AUTO	"0": Disable "1": Enable	1	R/W	○	Automatic selection of behavior mode
PRINT	"0": Continuous "1": Tear-off "2": Dispenser "3": Cutter "4": Linerless "5": Cut while printing	1 No option: 1 Cutter: 3 Dispenser: 2 Linerless: 4	R/W	○	Print motion
PEEL	"0": Motion 3 (No backfeed) "1": Motion 1 (Thermal head position) "2": Motion 2 (Dispenser position)	1	R/W	○	Dispenser motion (backfeed motion) <PM>
CUTTER	"0": Motion 3 (No backfeed) "1": Motion 1 (Thermal head position) "2": Motion 2 (Cutter position)	1	R/W	○	Cutter motion <PM>
NONSEPA	"2": Motion 2 (Dispenser position)	2	R/W	○	Linerless motion (Backfeed motion) <PM>
TEAR_OFFSET	"-99” to "99" (dots)	0	R/W	○	Tear-off Offset adjust <PO>
CUT_OFFSET	"-99” to "99" (dots)	0	R/W	○	Cutter Offset adjust <PO>
DISP_OFFSET	"-99” to "99" (dots)	0	R/W	○	Dispenser Offset adjust <PO>
TYPE	"0": Thermal transfer "1": Direct thermal	0	R/W	○	Print method <PH>
SENSOR	"0": Disable sensor "1": GAP "2": I-MARK (Linerless: 0, 2) (Tear-off or Dispenser or Cut while printing: 1, 2)	1 (Linerless: 0)	R/W	○	Sensor type <IG> Sensor value of the active print mode.

[PRINTER] section					
Name of setting item	Setting value	Initial value	R/W	Initial	Contents of Setting item
				CA	
	(Continuous or cutter: 0, 1, 2)				
PEND_TYPE	"0": I-MARK "1": GAP	0	R/W	○	Type of paper end sensor
EJECT_CUT	"0" to "5" (sec.)	0	R/W	○	Eject cut settings
MEDIA_CHECK	"0": Disable "1": Enable	0	R/W	○	Media check
HEADCHECK	"0": Disable "1": Normal range "2": Barcode range	0	R/W	○	Head check
HEADCHECK_ MODE	"0": Check one page "1": Specify start and end "2": Specify number of pages	0	R/W	○	Head check mode
HEADCHECK_ PAGE	“1" to "999999”	1	R/W	○	Number of head check pages
LANGUAGE	"0": English "1": German "2": French "3": Spanish "4": Italian "5": Portuguese (Europe) "6": Czech "7": Danish "8": Dutch "9": Finnish "10": Greek "11": Hungarian "12": Norwegian "13": Polish "14": Romanian "15": Russian "16": Slovakian "17": Swedish "18": Turkish "19": Chinese (Simplified) "20": Chinese (Traditional) "21": Korean "22": Japanese "23": Arabic "24": Thai "25": Vietnamese "26": Farsi "27": Indonesian "28": Hindi "29": Portuguese (Brazil) "30": Bulgarian	0	R/W	○	Language settings

[PRINTER] section					
Name of setting item	Setting value	Initial value	R/W	Initial CA	Contents of Setting item
TIMEZONE	Refer to the table of the timezone.	Europe/London	R/W	○	Time zone
DATE_SET	"YYYY/MM/DD" Y: year M: Month D: Date Min: 2000/01/01 00:00:00 Max: 2035/12/31 23:59:00	2013/01/01	R/W	-	Set calendar (date)
TIME_SET	"HH:NN:SS" H: Hour N: Minute S: Second	00:00:00	R/W	-	Set calendar (time)
POWER_SAVE	0: Disable "1" to "3600" (sec.) * Setup in minutes.	3600	R/W	○	Power saving setting
LANGUAGE_ ICON	"0": Disable "1": Enable	0	R/W	○	Display Language Icon
BUZZER	"0": Buzzer off "1": Volume low "2": Volume medium "3": Volume large	2	R/W	○	Buzzer volume
BUZZER_ POWEROFF	"0": Buzzer off "1": Volume low "2": Volume medium "3": Volume large	2	R/W	○	Power Off Sound
LCDVOLUME	“0" to "9”	7	R/W	○	LCD Brightness
ADJUSTPITCH	Unit: dots 609 dpi: "-90” to "90" 305 dpi: "-45” to "45" 203 dpi: "-30” to "30"	0	R/W	-	Adjust print position
ADJUSTOFFSET	Unit: dots 609 dpi: "-90” to "90" 305 dpi: "-45” to "45" 203 dpi: "-30” to "30"	0	R/W	-	Offset adjust
ADJ_ PITCHOFFSET	Unit: dots 609 dpi: "-1176” to "1176" 305 dpi: "-588” to "588" 203 dpi: "-392” to "392"	0	R/W	-	Pitch and Offset adjust
OPTIONTIME	"0", "5" to "200" (x100ms)	0	R/W	○	Waiting time in tear-off mode for next data <TW>
AUTO_ MEASURE	"0": Disable "1": Enable	0	R/W	○	Automatic measurement of label length

[PRINTER] section					
Name of setting item	Setting value	Initial value	R/W	Initial	Contents of Setting item
				CA	
AUTO_ONLINE	"0": Disable "1": Enable	1	R/W	○	Auto online <AO>, <LD>
FEED	"0": Disable "1": Enable	0	R/W	○	Initial feed
ONLINE_FEED	"0": Disable "1": Enable	0	R/W	○	Online feed <LF>
IGNORE_CRLF	"0": Do not remove CR/LF "1": Remove CR/LF	0	R/W	○	Ignore CR/LF <CL>
BYTECOMMAND	"0": Disable "1": Enable	0	R/W	○	Remove CAN/DLE <1B>
IMLVL_RL	"0" to "127": transmissive sensor level (Receiving light)	64	R/W	-	Adjust reflective sensor level (Receiving light)
IMLVL_LE	"0" to "7": transmissive sensor level (Light emission)	3	R/W	-	Adjust reflective sensor level (Light emission)
IM_SL	"0.0": Automatic setting "0.1" to "3.3": Manual setting	0.0	R/W	-	Reflective sensor slice level
GAPLVL_RL	"0" to "127": transmissive sensor level (Receiving light)	64	R/W	-	Adjust transmissive sensor level (Receiving light)
GAPLVL_LE	"0" to "7": transmissive sensor level (Light emission)	3	R/W	-	Adjust transmissive sensor level (Light emission)
GAP_SL	"0.0": Automatic setting "0.1" to "3.3": Manual setting	0.0	R/W	-	Transmissive sensor slice level
RB_NEND	"0": Disable "1": Enable	1	R/W	○	Detect ribbon near end
PRIORITY	"0": Prioritize command "1": Prioritize LCD setting	0	R/W	○	Priority setting * target command <#F>, <IG>, <CS>, <A3>, <PM>
PRINT_AREA	"0": Standard "1": Left-justify	0	R/W	○	Move printable area
ADJUSTDARK	“0" to "99”	50	R/W	-	Adjust darkness
OP_FEED	Unit: dots 609 dpi: "0" to "6120" 305 dpi: "0" to "3060" 203 dpi: "0" to "2040"	0	R/W	○	Optional feed volume
PASS_SET	"0": Disable "1": Enable	0	R/W	-	Input password
ALL_QTY	"0": Disable "1": Enable	0	R/W	○	Display total number of labels to print
HEX_DUMP_ MODE	"0": Disable "1": Enable	0	R/W	○	HEX DUMP MODE of Enable/Disable

[PRINTER] section					
Name of setting item	Setting value	Initial value	R/W	Initial CA	Contents of Setting item
APP_MODE	"00": AUTO "SB": SBPL "SZ": SZPL "SI": SIPL "SD": SDPL "ST": STCL "SE": SEPL	00	R	-	Application mode
APP_MODE_ AUTO	"00": AUTO "SB": SBPL "SZ": SZPL "SI": SIPL "SD": SDPL "ST": STCL "SE": SEPL	SB	R	-	Application mode of AUTO mode
CALENDAR_ CHECK	"0": Disable "1": Enable	1	R/W	○	Calendar check
REPRINT	"0": Disable "1": Enable	0	R/W	○	Reprint
INSTALL_ SECURITY	"0": Disable "1": USB "2": Always	0	R/W	-	Install Security Password control for pkg install
PRINTEND_ POSITION	Unit: dots 609 dpi: "1" to "9600" 305 dpi: "1" to "18000" 203 dpi: "1" to "20000"	0	R/W	○	Print End Position
SENSOR_ CONTINUOUS	"0": Disable sensor "1": GAP "2": I-MARK	1	R/W	○	Sensor type (Continuous)
SENSOR_ TEAROFF	"1": GAP "2": I-MARK	1	R/W	○	Sensor type (Tear-off)
SENSOR_PEEL	"1": GAP "2": I-MARK	1	R/W	○	Sensor type (Dispenser)
SENSOR_ CUTTER	"0": Disable sensor "1": GAP "2": I-MARK	1	R/W	○	Sensor type (Cutter)
SENSOR_ LINERLESS	"0": Disable sensor "2": I-MARK	0	R/W	○	Sensor type (Linerless)
SENSOR_ CUTPRINT	"1": GAP "2": I-MARK	1	R/W	○	Sensor type (Cut while printing)
LB_NEND	"0": Disable "1": Enable	0	R/W	○	Label near end
AC_POWERON	"0": Disable "1": Enable	0	R/W	-	AC Power On
UNIT	"0": dot	0	R/W	○	Unit

[PRINTER] section					
Name of setting item	Setting value	Initial value	R/W	Initial CA	Contents of Setting item
	"1": inch "2": mm				
BV_MODE	"0": Disabled "1": Readable "2": Comparison	0	R/W	○	Barcode check mode
BV_START_ POSITION	Unit: dots 203 dpi: "10" to "20000" 305 dpi: "15" to "18000" 609 dpi: "30" to "9600"	203 dpi: 72 305 dpi: 108 609 dpi: 216	R/W	○	Barcode check start position
BV_VOID_PRINT	"0": Disabled "1": Enabled	0	R/W	○	Barcode printing VOID
BV_RETRY_ COUNT	"0" to "5" Count	0	R/W	○	Barcode check the number of retries
BV_HOST_ NOTIFICATION	"0": Disabled "1": Enabled	0	R/W	○	Barcode check result host notification
BV_BARCODE_ QMETHOD	"0": Command "1": Setting	0	R/W	○	How to specify the number of barcodes
BV_BARCODE_Q	"1" to "10": Barcodes per label	1	R/W	○	Number of barcodes
BV_RS232C_ READER	"0": Host "1": Reader	0	R/W	○	RS-232C Connection
SUPPORT_LOG_ SAVE	"0": Disabled "1": Enabled	0	R/W	○	Saving log
MICRO_LABEL_ PRINT_MODE	"0": Disabled "1": Enabled	0	R/W	○	Micro Label Print Mode
MLPM_AUTO_ LABEL_LENGTH	"0": Disabled "1": Enabled	1	R/W	○	Micro Label Print Mode – Auto Label Length Detection
MLPM_LABEL_ LENGTH_COUNT	"1" to "10"	3	R/W	○	Micro Label Print Mode – Label Length Count
MLPM_LABEL_ LENGTH	Unit: dots 203 dpi: "72" to "424" 305 dpi: "108" to "636" 609 dpi: "216" to "1272"	203 dpi: 320 305 dpi: 480 609 dpi: 960	R/W	○	Micro Label Print Mode – Label Length

[COUNT] section					
Name of setting item	Setting value	Initial value	R/W	Initial CB	Contents of Setting item
PRTCLN	"0": Disable "1": Enable	0	R/W	○	Notification for printer cleanup
PRTCLN_ITV_COUNT	"10" to "1000" (m)	400	R/W	○	Distance to display notification for printer cleanup
PRTCLN_COUNT	"XXXX" * Unit: 1/24 mm	-	R	-	Cleaning distance

[COUNT] section					
Name of setting item	Setting value	Initial value	R/W	Initial	Contents of Setting item
				CB	
HDCHG	"0": Disable "1": Enable	0	R/W	○	Notification for replacing thermal head
HDCHG_ITV_COUNT	"10" to "100" (km)	100	R/W	○	Distance to display notification for replacing thermal head
HDCHG_COUNT	"XXX" * Unit: 1/24 mm	-	R	-	Print distance of a thermal head
CUTUNT	"0": Disable "1": Enable	0	R/W	○	Notification for replacing cutter unit
CUTUNT_ITV_COUNT	"10" to "1000" (k cuts)	1000	R/W	○	Distance to display notification for replacing cutter unit
CUTUNT_COUNT	"XX"	-	R	-	Cut count
ROLLER	"0": Disable "1": Enable	0	R/W	○	Notification for replacing platen roller
ROLLER_ITV_COUNT	"10" to "100" (km)	100	R/W	○	Distance to display notification for replacing platen roller
ROLLER_COUNT	"XXX" * Unit: 1/24 mm	-	R	-	Distance of the platen roller

[IEEE1284] section					
Name of setting item	Setting value	Initial value	R/W	Initial	Contents of Setting item
				II	
PROTOCOL	"0": Status 4 MULTI "2": Status 5 "3": NONE	0	R/W	○	Communication protocol (for SBPL)
STATUS5_BCC	"0": Disable "1": Enable	0	R/W	○	BCC check <CR>

[RS-232C] section					
Name of setting item	Setting value	Initial value	R/W	Initial	Contents of Setting item
				IR	
BOURATE	"0": 2400 bps "1": 4800 bps "2": 9600 bps "3": 19200 bps "4": 38400 bps "5": 57600 bps "6": 115200 bps	6	R/W	○	Baud rate
DATABIT	"0": 8 bit "1": 7 bit	0	R/W	○	Data bit
PARITYBIT	"0": None "1": Odd number "2": Even number	0	R/W	○	Parity bit
STOPBIT	"0": 1 bit	0	R/W	○	Stop bit

[RS-232C] section					
Name of setting item	Setting value	Initial value	R/W	Initial IR	Contents of Setting item
	"1": 2 bit				
CONTROL	"1": READY/BUSY Multi "3": XON/XCFF Multi "4": STATUS4 "5": STATUS3 "6": STATUS5 "7": NONE	4	R/W	○	Communication protocol (for SBPL)
STATUS5_BCC	"0": Disable "1": Enable	0	R/W	○	BCC check <CR>

[LAN] section					
Name of setting item	Setting value	Initial value	R/W	Initial IL	Contents of Setting item
DHCPv4	"0": Disable "1": Enable	1	R/W	-	DHCPv4 setting W: LAN/WLAN both R: Active Interface
IPv4_ADDRESS	AAA.BBB.CCC.DDD Allow "0" to "255" for A-D	0.0.0.0	R/W	-	IPv4 address W: LAN/WLAN both R: Active Interface
IPv4_SUBNETMASK	AAA.BBB.CCC.DDD Allow "0" to "255" for A-D	255.255.255.0	R/W	-	IPv4 subnet mask W: LAN/WLAN both R: Active Interface
IPv4_DEFGATEWAY	AAA.BBB.CCC.DDD Allow "0" to "255" for A-D	0.0.0.0	R/W	-	IPv4 default gateway W: LAN/WLAN both R: Active Interface
IPv4_DNSPrimary IPAddress	AAA.BBB.CCC.DDD Allow "0" to "255" for A-D	0.0.0.0	R/W	-	IPv4 DNS primary address W: LAN/WLAN both R: Active Interface
IPv4_DNSSecondary IPAddress	AAA.BBB.CCC.DDD Allow "0" to "255" for A-D	0.0.0.0	R/W	-	IPv4 DNS secondary address W: LAN/WLAN both R: Active Interface
IPv6_ADDSET	"0": AUTO "1": DHCP "2": Manual Setting "3": Disable	3	R/W	-	IPv6 address setting W: LAN/WLAN both R: Active Interface
IPv6_ADDRESS	AAAA:BBBB:CCCC:DDDD:EEEE:FFFF:GGGG:HHHH Specified in the ASCII of 128bit A to H is "0" to "FFFF" A to H is omissible.	0:0:0:0:0:0:0:0	R/W	-	IPv4 address W: LAN/WLAN both R: Active Interface

[LAN] section					
Name of setting item	Setting value	Initial value	R/W	Initial IL	Contents of Setting item
IPv6_ROUTER	AAAA:BBBB:CCCC:DDDD:EEEE:FFFF:GGGG:HHHH Specified in the ASCII of 128bit A to H is "0" to "FFFF" A to H is omissible.	0:0:0:0:0:0:0:0	R/W	-	IPv6 default router W: LAN/WLAN both R: Active Interface
IPv6_PREFIX	1 to 128	64	R/W	-	IPv6 subnet prefix W: LAN/WLAN both R: Active Interface
IPv6_DNSPrimary IPAddress	AAAA:BBBB:CCCC:DDDD:EEEE:FFFF:GGGG:HHHH Specified in the ASCII of 128bit A to H is "0" to "FFFF" A to H is omissible.	0:0:0:0:0:0:0:0	R/W	-	IPv6 DNS primary address W: LAN/WLAN both R: Active Interface
DHCPv4_LAN	"0": Disable "1": Enable	1	R/W	○	DHCPv4 setting
IPv4_ADDRESS_LAN	AAA.BBB.CCC.DDD Allow "0" to "255" for A-D	0.0.0.0	R/W	○	IPv4 address
IPv4_SUBNETMASK_LAN	AAA.BBB.CCC.DDD Allow "0" to "255" for A-D	255.255.255.0	R/W	○	IPv4 subnet mask
IPv4_DEFGATEWAY_LAN	AAA.BBB.CCC.DDD Allow "0" to "255" for A-D	0.0.0.0	R/W	○	IPv4 default gateway
IPv4_DNSPrimary IPAddress_LAN	AAA.BBB.CCC.DDD Allow "0" to "255" for A-D	0.0.0.0	R/W	○	IPv4 DNS primary address
IPv4_DNSSecondary IPAddress_ LAN	AAA.BBB.CCC.DDD Allow "0" to "255" for A-D	0.0.0.0	R/W	○	IPv4 DNS secondary address
IPv6_ADDSET_LAN	"0": AUTO "1": DHCP "2": Manual Setting "3": Disable	3	R/W	○	IPv6 address setting
IPv6_ADDRESS_LAN	AAAA:BBBB:CCCC:DDDD:EEEE:FFFF:GGGG:HHHH Specified in the ASCII of 128bit A to H is "0" to "FFFF" A to H is omissible.	0:0:0:0:0:0:0:0	R/W	○	IPv4 address
IPv6_ROUTER_LAN	AAAA:BBBB:CCCC:DDDD:EEEE:FFFF:GGGG:HHHH Specified in the ASCII of 128bit A to H is "0" to "FFFF" A to H is omissible.	0:0:0:0:0:0:0:0	R/W	○	IPv6 default router
IPv6_PREFIX_LAN	1 to 128	64	R/W	○	IPv6 subnet prefix
IPv6_DNSPrimary IPAddress_ LAN	AAAA:BBBB:CCCC:DDDD:EEEE:FFFF:GGGG:HHHH	0:0:0:0:0:0:0:0	R/W	○	IPv6 DNS primary address

[LAN] section					
Name of setting item	Setting value	Initial value	R/W	Initial IL	Contents of Setting item
	Specified in the ASCII of 128bit A to H is "0" to "FFFF" A to H is omissible.				
ARP_Announcement. Additional	"0": Disable "1": Enable	1	R/W	○	ARP Announcement additional
ARP_Announcement. Periodic	"0" to "600" (sec.)	0	R/W	○	ARP Announcement Periodic
KEEPALIVETIME	"30" to "300" (sec.)	180	R/W	○	Keep alive time
KEEPALIVECOUNT	"1" to "99" (times)	17	R/W	○	Keep alive count
SOCKET_CANCEL	"0": Normal mode "1": Compatible mode	0	R/W	○	Socket compatibility
PROTOCOL	"0": Status 4 (Periodic) "1": Status 4 (ENQ) "2": Status 3 "3": Status 5 "4": NONE	1	R/W	○	Communication protocol (for SBPL)
LEGACY_MODE	"0": Disable "1": Enable	0	R/W	○	Legacy Status setting
TCP_CONNECTION_ QUEUE	"0": Disable "1": Enable	1	R/W	○	TCP connection queue
STATUS5_BCC	"0": Disable "1": Enable	0	R/W	○	BCC check <CR>
PORT1	"1" to "65535"	1024	R/W	○	Port 1
PORT2	"1" to "65535"	1025	R/W	○	Port 2 The number is set in priority order of Port3>Port 2>Port1
PORT3	"1" to "65535"	9100	R/W	○	Port 3 The number is set in priority order of Port3>Port 2>Port1
MACADDRESS	"AA:BB:CC:DD:EE:FF"	-	R	-	MAC address
SNTP_ENABLED	"0": Disable "1": Enable	0	R/W	○	SNTP function
NTP_IPv4_ADD	AAA.BBB.CCC.DDD Allow "0" to "255" for A-D	0.0.0.0	R/W	○	NTP IPv4 server address
SNTP_ERROR	"0": Disable "1": Enable	0	R/W	○	SNTP error notification
SNMP_SYSCONTACT	0-255-character string	NULL	R/W	○	Contact Information
SNMP_SYSNAME	0-255-character string	NULL	R/W	○	Equipment name
SNMP_SYSLOCATION	0-255-character string	NULL	R/W	○	Installation location
SNMP	"0": Disable "1": Enable	1	R/W	○	SNMP settings

[LAN] section					
Name of setting item	Setting value	Initial value	R/W	Initial IL	Contents of Setting item
SNMP_R_VERSION	"0": 1|2c|3 "1": 1|2c "2": 3 "3": Disable	0	R/W	○	SNMP Version
SNMP_R_COMMUNITY_NAME	Max. 32 digit character * Encrypted data	public (empty string to disable)	R/W	○	Read-only community name
SNMP_R_USER_NAME	Max. 32 digit character * Encrypted data	rouser (empty string to disable)	R/W	○	Read-only user name
SNMP_R_SECURITY	"0": none "1": Authentication "2": Privacy	none	R/W	○	Read-only security
SNMP_R_AUTH PROTCOL	"0": MD5 "1": SHA	0	R/W	○	Read-only Authentication protocol
SNMP_R_AUTHPASS	String of 8 to 32 digits * Encrypted data	mypassword	R/W	○	Read-only Authentication password
SNMP_R_PRIV PROTCOL	"0": DES "1": AES	0	R/W	○	Read-only Encryption protocol
SNMP_R_PRIVPASS	String of 8 to 32 digits * Encrypted data	mypassword	R/W	○	Read-only Encryption password
SNMP_RW_VERSION	"0": 1|2c|3 "1": 1|2c "2": 3 "3": Disable	3	R/W	○	SNMP Version
SNMP_RW_COMMUNITY_NAME	Max. 32 digit character * Encrypted data	private (empty string to disable)	R/W	○	Read Write community name
SNMP_RW_USER_NAME	Max. 32 digit character * Encrypted data	rwuser (String of empty)	R/W	○	Read Write user name
SNMP_RW_SECURITY	"0": none "1": Authentication "2": Privacy	none	R/W	○	Read Write security
SNMP_RW_AUTH PROTCOL	"0": MD5 "1": SHA	0	R/W	○	Read Write Authentication protocol
SNMP_RW_AUTHPASS	String of 8 to 32 digits * Encrypted data	mypassword	R/W	○	Read Write Authentication password
SNMP_RW_PRIV PROTCOL	"0": DES "1": AES	0	R/W	○	Read Write Encryption protocol
SNMP_RW_PRIVPASS	String of 8 to 32 digits * Encrypted data	mypassword	R/W	○	Read Write Encryption password
SNMP_TRAP	"0": Disable	0	R/W	○	Trap

[LAN] section					
Name of setting item	Setting value	Initial value	R/W	Initial IL	Contents of Setting item
	"1": Enable				
SNMP_TRAP_ VERSION	"0": SNMPv1 "1": SNMPv2c "2": SNMPv3	0	R/W	○	Trap version
SNMP_TRAP_ DESTINATIONS	"1": Destination1 "2": Destination2 "3": Destination3	1	R/W	○	Trap Destinations
SNMP_TRAP_ IPVERSION	"4": IPv4 "6": IPv6	4	R/W	○	Trap IP Version
SNMP_TRAP_ DESTINATION1v4	AAA.BBB.CCC.DDD Allow "0" to "255" for A-D	0.0.0.0	R/W	○	IPv4 Trap Destination1
SNMP_TRAP_ DESTINATION1v6	AAAA:BBBB:CCCC:DDDD: EEEE:FFFF:GGGG:HHHH Specified in the ASCII of 128bit A to H is "0" to "FFFF" A to H is omissible.	0:0:0:0:0:0:0:0	R/W	○	IPv6 Trap Destination1
SNMP_TRAP_ DESTINATION2v4	AAA.BBB.CCC.DDD Allow "0" to "255" for A-D	0.0.0.0	R/W	○	IPv4 Trap Destination2
SNMP_TRAP_ DESTINATION2v6	AAAA:BBBB:CCCC:DDDD: EEEE:FFFF:GGGG:HHHH Specified in the ASCII of 128bit A to H is "0" to "FFFF" A to H is omissible.	0:0:0:0:0:0:0:0	R/W	○	IPv6 Trap Destination2
SNMP_TRAP_ DESTINATION3v4	AAA.BBB.CCC.DDD Allow "0" to "255" for A-D	0.0.0.0	R/W	○	IPv4 Trap Destination3
SNMP_TRAP_ DESTINATION3v6	AAAA:BBBB:CCCC:DDDD: EEEE:FFFF:GGGG:HHHH Specified in the ASCII of 128bit A to H is "0" to "FFFF" A to H is omissible.	0:0:0:0:0:0:0:0	R/W	○	IPv6 Trap Destination3
SNMP_TRAP_ COMMUNITY	Max. 32 digit character * Encrypted data	trapcom	R/W	○	Trap community name
SNMP_TRAP_USER	Max. 32 digit character * Encrypted data	trapuser	R/W	○	Trapuser name
SNMP_TRAP_ ENGINEID	Even number 10 to 64 digits	Number generated from Unique Code	R/W	○	Trap Engine ID
SNMP_TRAP_ SECURITY	"0": none "1": Authentication "2": Privacy	none	R/W	○	Trap Security
SNMP_TRAP_AUTH PROTCOL	"0": MD5 "1": SHA	0	R/W	○	Trap Authentication protocol

[LAN] section					
Name of setting item	Setting value	Initial value	R/W	Initial IL	Contents of Setting item
SNMP_TRAP_AUTH PASS	String of 8 to 32 digits * Encrypted data	mypassword	R/W	○	Trap Authentication password
SNMP_TRAP_PRIV PROTCOL	"0": DES "1": AES	DES	R/W	○	Trap Encryption protocol
SNMP_TRAP_PRIVPASS	String of 8 to 32 digits * Encrypted data	mypassword	R/W	○	Trap Encryption password
LPD	"0": Disable "1": Enable	1	R/W	○	LPD
DNSLOOKUP	"0": Disable "1": Enable	0	R/W	○	DNS Lookup
FTP	"0": Disable "1": Enable	0	R/W	○	FTP
FTP_TIMEOUT	"10" to "3600" (sec.)	300	R/W	○	FTP Timeout
SELECT_NETWORK	"0": Auto "1": LAN "2": WLAN	0	R/W	○	LAN/WLAN Switching Please reboot in order to make a setup reflect.
ACTIVE_NETWORK	"1": LAN "2": WLAN	-	R	-	LAN/WLAN Switching (Auto)

[USB] section					
Name of setting item	Setting value	Initial value	R/W	Initial IU	Contents of Setting item
PROTOCOL	"0": Status4 "1": Status5 "2": NONE	0	R/W	○	Communication protocol (for SBPL)
STATUS5_BCC	"0": Disable "1": Enable	0	R/W	○	BCC check <CR>
USB_SN_KIND	"0": Disable "1": Enable	0	R/W	○	Change USB serial number. If enabled, the default USB serial number is 00000000.

[WLAN] section					
Name of setting item	Setting value	Initial value	R/W	Initial IW	Contents of Setting item
DHCPv4_WLAN	"0": Static "1": DHCP	1	R/W	○	DHCPv4 setting
IPv4_ADDRESS_ WLAN	AAA.BBB.CCC.DDD Allow "0" to "255" for A-D	0.0.0.0	R/W	○	IPv4 address
IPv4_SUBNETMASK_ WLAN	AAA.BBB.CCC.DDD Allow "0" to "255" for A-D	255.255.255.0	R/W	○	IPv4 subnet mask
IPv4_DEFGATEWAY_ WLAN	AAA.BBB.CCC.DDD Allow "0" to "255" for A-D	0.0.0.0	R/W	○	IPv4 default gateway

[WLAN] section					
Name of setting item	Setting value	Initial value	R/W	Initial IW	Contents of Setting item
IPv4_DNSPrimary IPAddress_WLAN	AAA.BBB.CCC.DDD Allow "0" to "255" for A-D	0.0.0.0	R/W	○	IPv4 DNS primary address
IPv4_DNSSecondary IPAddress_WLAN	AAA.BBB.CCC.DDD Allow "0" to "255" for A-D	0.0.0.0	R/W	○	IPv4 DNS secondary address
IPv6_ADDSET_ WLAN	"0": AUTO "1": DHCP "2": Manual Setting "3": Disable	3	R/W	○	IPv6 address setting
IPv6_ADDRESS_ WLAN	AAAA:BBBB:CCCC:DDDD:EEEE:FFFF:GGGG:HHHH Specified in the ASCII of 128bit A to H is "0" to "FFFF" A to H is omissible.	0:0:0:0:0:0:0:0	R/W	○	IPv4 address
IPv6_ROUTER_ WLAN	AAAA:BBBB:CCCC:DDDD:EEEE:FFFF:GGGG:HHHH Specified in the ASCII of 128bit A to H is "0" to "FFFF" A to H is omissible.	0:0:0:0:0:0:0:0	R/W	○	IPv6 default router
IPv6_PREFIX_ WLAN	1 to 128	64	R/W	○	IPv6 subnet prefix
IPv6_DNSPrimary IPAddress_WLAN	AAAA:BBBB:CCCC:DDDD:EEEE:FFFF:GGGG:HHHH Specified in the ASCII of 128bit A to H is "0" to "FFFF" A to H is omissible.	0:0:0:0:0:0:0:0	R/W	○	IPv6 DNS primary address
WLANMODE	"0": Infrastructure mode "1": Ad Hoc mode	1	R/W	○	Select WLAN Mode
ESSID	1 to 32 digit long characters	SATO_PRINTER	R/W	○	SSID
HIDEESSID	"0": Disable "1": Enable	1	R/W	○	Hidden SSID
CHANNEL	“1" to "11” “1" to "13" * The range follows Region.	6	R/W	○	Channel number
WLANNETWORK SECINF	"0": None "1": WEP "2": WPA2/WPA "3": WPA2 "4": Dynamic WEP	0	R/W	○	Infrastructure mode Network security
WLANNETWORK SECAD	"0": None "1": WEP	0	R/W	○	Ad Hoc mode Network security
WEPAUTH	"0": Open System "1": Shared Key	0	R/W	○	WEP key
WEPKEY1	String of 5 to 13 digits	(String of empty)	W	○	WEP key 1

[WLAN] section					
Name of setting item	Setting value	Initial value	R/W	Initial IW	Contents of Setting item
	10 or 26 digit hexadecimal * Encrypted data				
WEPKEY2	String of 5 to 13 digits 10 or 26 digit hexadecimal * Encrypted data	(String of empty)	W	○	WEP key 2
WEPKEY3	String of 5 to 13 digits 10 or 26 digit hexadecimal * Encrypted data	(String of empty)	W	○	WEP key 3
WEPKEY4	String of 5 to 13 digits 10 or 26 digit hexadecimal * Encrypted data	(String of empty)	W	○	WEP key 4
WEPKEYINDEX	“1" to "4"	1	R/W	○	WEP key index
WPAAUTH	"0": Personal (PSK) "1": Enterprise (802.1x) "2": CCKM	0	R/W	○	WPA authentication
PSK	8-63 ASCII or 64 HEX digits * Encrypted data	(String of empty)	W	○	PSK * WPA Auth is PSK
EAPMODE	"0": FAST "1": LEAP "2": PEAP "3": TLS "4": TTLS	0	R/W	○	EAP Mode * WPA Auth is not PSK
INNER_FAST	"0": MSCHAPv2 "1": GTC "2": TLS	0	R/W	○	Inner Method if EAP Mode is FAST
INNER_PEAP	"0": MSCHAPv2 "1": GTC "2": MD5 "3": OTP "4": TLS	0	R/W	○	Inner Method if EAP Mode is PEAP
INNER_TTLS	"0": MSCHAPv2 "1": MSCHAP "2": CHAP "3": PAP "4": EAP-GTC "5": EAP-MD5 "6": EAP-MSCHAPv2 "7": EAP-OTP "8": EAP-TLS	0	R/W	○	Inner Method if EAP Mode is TTLS
EAP_USERNAME	0 to 63 digit long characters	NULL	R/W	○	EAP authentication user name

[WLAN] section					
Name of setting item	Setting value	Initial value	R/W	Initial IW	Contents of Setting item
EAP_PASSWORD	0 to 32 digit long characters * Encrypted data	(String of empty)	W	○	EAP authentication password
EAP_ANON	0 to 63 digit long characters	NULL	R/W	○	Anon. Outer ID If EAP Mode is FASE, PEAP or TTLS.
EAP_VERIFY	"0": Disable "1": Enable	1	R/W	○	Verify Server Certification If EAP is other than LEAP.
EAP_PRIVATEKEY	0 to 64 digit long characters * Encrypted data	(String of empty)	W	○	Private Key Password
EAP_AUTO_PAC	"0": Disable "1": Enable	0	R/W	○	PAC Auto Provisioning If EAP is FAST.
EAP_PAC_PASS	0-64 bytes * Encrypted data	(String of empty)	W	○	PAC Password If EAP is FAST and Auto provisioning is off.
SignalLevel1	-85 dBm	-	R	-	Threshold for electrical field strength 1
SignalLevel2	-74 dBm	-	R	-	Threshold for electrical field strength 2
SignalLevel3	-64 dBm	-	R	-	Threshold for electrical field strength 3
FWversion	x.x.x.	-	R	-	Firmware version for WLAN module
MACADDRESS	"AA:BB:CC:DD:EE:FF"	-	R	-	MAC address
WIFI_DEVICE_ NAME	1 to 32 digit long characters	SATO_PRINTER	R/W	○	Wi-Fi Direct Device Name

[BLUETOOTH] section					
Name of setting item	Setting value	Initial value	R/W	Initial IB	Contents of Setting item
BLUETOOTH	"0": Disable "1": Enable	1	R/W	○	Bluetooth
PROTOCOL	"0": status3 "1": status4 "2": NONE	1	R/W	○	Communication protocol (for SBPL)
BLUELEVEL	"0": No authentication "1": Auth. level 2-1 "2": Auth. level 2-2 "3": Auth. level 3 "4": Auth. level 4	0	R/W	○	Authentication level
PINCODE	0-16 digit characters (except "") * Encrypted data	0000	R/W	○	PIN code

[BLUETOOTH] section					
Name of setting item	Setting value	Initial value	R/W	Initial	Contents of Setting item
				IB	
DEVICENAME	0 to 53 digit long characters	SATO PRINTER _xxxxxxxxxxxx	R/W	○	Device name (xxxxxxxxxxxx is BD address)
ISI	"0", "12" to "1000" (hexadecimal) Value will be set to Bluetooth module after deducting 1 from the value when odd number is set with ISI.	800	R/W	○	ISI
ISW	"0", "11" to "1000" (hexadecimal) Set ISI≥ISW	12	R/W	○	ISW
PSI	"12" to "1000" (hexadecimal) Value will be set to Bluetooth module after deducting 1 from the value when odd number is set with PSI.	800	R/W	○	PSI
PSW	"11" to "1000" (hexadecimal) Set PSI≥PSW	12	R/W	○	PSW
BLUEADDRESS	"aabbccddeeff"	-	R	-	BD address
BLUEVERSION	"spp3_vX.YY"	-	R	-	Bluetooth firmware version
CRC	"0": Disable "1": Enable	0	R/W	○	CRC mode
PAIRING1	"0": Do not remove "1": Remove	0	W	-	Remove paring information1 or not
PAIRING2	"0": Do not remove "1": Remove	0	W	-	Remove paring information2 or not
PAIRING3	"0": Do not remove "1": Remove	0	W	-	Remove paring information3 or not
PAIRING4	"0": Do not remove "1": Remove	0	W	-	Remove paring information4 or not
PAIRING5	"0": Do not remove "1": Remove	0	W	-	Remove paring information5 or not
PAIRING6	"0": Do not remove "1": Remove	0	W	-	Remove paring information6 or not
PAIRING7	"0": Do not remove "1": Remove	0	W	-	Remove paring information7 or not
PAIRING8	"0": Do not remove "1": Remove	0	W	-	Remove paring information8 or not
PAIRING9	"0": Do not remove "1": Remove	0	W	-	Remove paring information9 or not
PAIRING10	"0": Do not remove "1": Remove	0	W	-	Remove paring information10 or not

[BLUETOOTH] section					
Name of setting item	Setting value	Initial value	R/W	Initial	Contents of Setting item
				IB	
SPP_TIME	"0" to "10" (Unit: seconds)	0	R/W	○	Time to timeout for disconnection (SPP layer)
LMP_TIME	"0" to "999" (Unit: Tenths of a second)	100	R/W	○	Time to timeout for disconnection (LMP layer)
PAIRING_INFO1	"aabbccddeeff" (BD address only)	-	R	-	Paring information 1
PAIRING_INFO2	"aabbccddeeff" (BD address only)	-	R	-	Paring information 2
PAIRING_INFO3	"aabbccddeeff" (BD address only)	-	R	-	Paring information 3
PAIRING_INFO4	"aabbccddeeff" (BD address only)	-	R	-	Paring information 4
PAIRING_INFO5	"aabbccddeeff" (BD address only)	-	R	-	Paring information 5
PAIRING_INFO6	"aabbccddeeff" (BD address only)	-	R	-	Paring information 6
PAIRING_INFO7	"aabbccddeeff" (BD address only)	-	R	-	Paring information 7
PAIRING_INFO8	"aabbccddeeff" (BD address only)	-	R	-	Paring information 8
PAIRING_INFO9	"aabbccddeeff" (BD address only)	-	R	-	Paring information 9
PAIRING_INFO10	"aabbccddeeff" (BD address only)	-	R	-	Paring information 10

[NFC] section					
Name of setting item	Setting value	Initial value	R/W	Initial	Contents of Setting item
				IN	
IF	"0": Disable "1": Enable	1	R/W	○	NFC communication availability
ISINSTALLED	"0": not checked "1": installed "2": not installed	0	R	○	Whether NFC module is installed
MODULE_INFO	"AAAAAAAAAAAAAA, BBCCDDEE" AAAAAA~A: Serial number BBCCDDEE: Capability Container BB: E1 - NFC Forum CC: version number ex) 11 indicates 1.1	-	R	-	information of the installed NFC module

[NFC] section					
Name of setting item	Setting value	Initial value	R/W	Initial	Contents of Setting item
				IN	
	DD: memory size of the data area. ex) EA x 8 = 1876 bytes EE: read and write access capability of the data area ex) 00 indicates r/w ok				
CONFIRM	"0": none "1": confirm "2": password	0	R/W	○	Whether display confirmation screen when install setting from NFC

[EXT] section					
Name of setting item	Setting value	Initial value	R/W	Initial	Contents of Setting item
				IE	
EXTSIG	"0": Disable "1": Enable	0	R/W	○	Print start signal
EXTMODE	"0": TYPE1 "1": TYPE2 "2": TYPE3 "3": TYPE4	3	R/W	○	External signal switch
EXTRETRY	"0": Disable "1": Enable	0	R/W	○	Signal for reprint
EXTPRTSTAT	"2": 5 pins "4": 7 pins	2	R/W	○	Start print signal
EXTREISUU	"2": 5 pins "4": 7 pins	4	R/W	○	Signal for reprint
EXTPAPEREND	"8": 1 pin "2": 3 pins "4": 4 pins "16": 6 pins "64": 9 pins "32": 10 pins "0": Do not specify	8	R/W	○	Paper end signal
EXTRBNEND	"8": 1 pin "2": 3 pins "4": 4 pins "16": 6 pins "64": 9 pins "32": 10 pins "0": Do not specify	2	R/W	○	Ribbon end signal
EXTMCNERR	"8": 1 pin "2": 3 pins "4": 4 pins "16": 6 pins	4	R/W	○	Machine error signal

[EXT] section					
Name of setting item	Setting value	Initial value	R/W	Initial IE	Contents of Setting item
	"64": 9 pins "32": 10 pins "0": Do not specify				
EXTPRNCOMP	"8": 1 pin "2": 3 pins "4": 4 pins "16": 6 pins "64": 9 pins "32": 10 pins "0": Do not specify	16	R/W	○	Print complete signal
EXTOFFLINE	"8": 1 pin "2": 3 pins "4": 4 pins "16": 6 pins "64": 9 pins "32": 10 pins "0": Do not specify	64	R/W	○	Offline signal
EXTRBNNEAR	"8": 1 pin "2": 3 pins "4": 4 pins "16": 6 pins "64": 9 pins "32": 10 pins "0": Do not specify	32	R/W	○	Ribbon near end signal
EXTRDISPCOMP	"8": 1 pin "2": 3 pins "4": 4 pins "16": 6 pins "64": 9 pins "32": 10 pins "0": Do not specify	0	R/W	○	Dispenser completion signal
EXTLBLNEAR	"8": 1 pin "2": 3 pins "4": 4 pins "16": 6 pins "64": 9 pins "32": 10 pins "0": Do not specify	0	R/W	○	Label near end signal
EXT_9PIN	"0": MODE1 (With or not remaining items to print) "1": MODE2 (Online / offline status)	0	R/W	○	Output mode of 9-pin external signal

[SBPL] section						
Name of setting item	Setting value	Initial value		R/W	Initial	Contents of Setting item
					SB	
ZEROSLASH	"0": Disable "1": Enable	1		R/W	○	Zero slash <LH>, <LD>
SHOTAI	"1": Gothic "0": Mincho	1		R/W	○	Type face <KG>, <KM>
PROPORTIONAL	"0": Fixed pitch "1": Proportional pitch	1		R/W	○	Proportional pitch <PS>, <PR>
STDCODE	"0": Standard code "1": Non-standard code	0		R/W	○	Protocol code
CMDERR	"0": Disable "1": Enable	0		R/W	○	Command error
STXCODE	"0" to "255"	Standard 2 (0x02)	Non-standard 123 (0x7B)	R/W	○	STX <LD>
ETXCODE	"0" to "255"	3 (0x03)	125 (0x7D)	R/W	○	ETX <LD>
ESCCODE	"0" to "255"	27 (0x1B)	94 (0x5E)	R/W	○	ESC <LD>
ENQCODE	"0" to "255"	5 (0x05)	64 (0x40)	R/W	○	ENQ <LD>
CANCODE	"0" to "255"	24 (0x18)	33 (0x21)	R/W	○	CAN <LD>
NULLCODE	"0" to "255"	0 (0x00)	126 (0x7E)	R/W	○	NULL <LD>
OFFLINECODE	"0" to "255"	64 (0x40)	93 (0x5D)	R/W	○	OFFLINE <LD>
EUROCODE	"0" to "255"	213 (0xD5)	213 (0xD5)	R/W	○	EURO <LD>
KANJI	"0": JIS code "1": SJIS code "2": Unicode (UTF16) "3": GB18030 "4": BIG5 "5": KSC5601(EUC-KR) "6": Unicode (UTF8)	3		R/W	○	Kanji code <KC>
KNJ_MODE	"0": JIS X0208 compatible "1": JIS X0208 "2": JIS X0213 "3": GB18030 "4": BIG5 "5": KSC5601	3		R/W	○	Kanji mode
CODE_PAGE	"0": UTF8 "1": CP858	1		R/W	○	Code page

[SBPL] section					
Name of setting item	Setting value	Initial value	R/W	Initial SB	Contents of Setting item
	"2": ISO8859-1 "3": ISO8859-2 "4": ISO8859-9 "5": CP737 "6": CP855 "7": CP850 "8": CP852 "9": CP857 "10": CP866 "11": CP1250 "12": CP1251 "13": CP1252 "14": CP1253 "15": CP1254 "16": CP1257 "17": CP869 "18": JIS X0201				
Orientation	"0": Portrait "1": Landscape "2": Inv. Portrait "3": Inv. Landscape	0	R/W	○	Orientation
CODE128(C)_Zero_Fill	"0": Disable "1": Enable	0	R/W	○	Compatible Code128
KANJI_COMMAND	"0": Disable "1": Enable	0	R/W	○	Compatibility of Chinese characters command
CALL_FONTLOGO	"0": Disable "1": Enable	0	R/W	○	Character code compatible at Download Font / Log call
M-8400_COMPATI	"0": Disable "1": Enable	0	R/W	○	Compatibility of M-8400
SAVE_A3	"0": Disable "1": Enable	0	R/W	○	<A3> Save/Do not save Setting
PDF417_ECCFIXED	"0": Disable "1": Enable	0	R/W	○	PDF417 ECC level fixed

[SZPL] section					
Name of setting item	Setting value	Initial value	R/W	Initial SZ	Contents of Setting item
PITCH_OFFSET	"-120" to "120" (dots)	0	R/W	○	Pitch offset at top of label
SHIFT_OFFSET	Unit: dots 609 dpi: "-2496” to "2496" 305 dpi: "-1248” to "1248" 203 dpi: "-832” to "832"	0	R/W	○	Label shift offset
CMD_HEAD	"0" to "255"	94	R/W	○	Command head

[SZPL] section					
Name of setting item	Setting value	Initial value	R/W	Initial SZ	Contents of Setting item
CTR_HEAD	"0" to "255"	126	R/W	○	Control head
DELIMITER	"0" to "255"	44	R/W	○	Delimiter
DATE_FORM	"0": Normal "1": MM/DD/YY(24 hours) "2": MM/DD/YY(12 hours) "3": DD/MM/YY(24 hours) "4": DD/MM/YY(12 hours)	0	R/W	○	Date and time format
DEF_FONT	"0": None "1": SATO Hebe Sans "2": SATO Hebe Sans Arabic "3": SATO Hebe Sans Thai "4": SATO Hebe Sans Hindi "5": SATO Gothic T Chinese "6": SATO Gothic Japanese "7": SATO Gothic S Chinese "8": SATO Gothic Korean "9": SATO Silver Serif "10": SATO Mincho T Chinese "11": SATO Mincho Japanese "12": SATO Mincho S Chinese "13": SATO Mincho Korean "14": SATO Roman Arabic "15": SATO Hebe Sans Hebrew	0	R/W	○	Initial setting font
LABEL_ROTATION	"0": 0 degree "1": 180 degree	0	R/W	○	Label Rotation

[SIPL] section					
Name of setting item	Setting value	Initial value	R/W	Initial SI	Contents of Setting item
ZEROSLASH	"0": Disable "1": Enable	0	R/W	○	Zero slash
EUROCODE	"0" to "255"	213 (0xD5)	R/W	○	EURO
CODE_PAGE	"0": 737 "1": 850 "2": 852 "3": 855 "4": 857 "5": 858 "6": 862 "7": 864 "8": 866 "9": 869 "10": 874 "11": 1250 "12": 1251	13 (1252)	R/W	○	Code page

[SIPL] section					
Name of setting item	Setting value	Initial value	R/W	Initial	Contents of Setting item
				SI	
	"13": 1252 "14": 1253 "15": 1254 "16": 1255 "17": 1256 "18": 1257 "19": 88591 "20": 88592 "21": 88599 "22": UTF8				
PROPORTIONAL	"0": Disable "1": Enable	0	R/W	○	c20 proportional pitch
FONTMODE	"0": Disable "1": Enable	0	R/W	○	New font encoding

[SDPL] section					
Name of setting item	Setting value	Initial value	R/W	Initial	Contents of Setting item
				SD	
CONTROL_CODE	"0": Standard code "1": Alternate code 1 "2": Alternate code 2 "3": User code	0	R/W	○	Protocol code
SOHCODE	"0" to "255"	1 (0x01)	R/W	○	SOH
STXCODE	"0" to "255"	2 (0x02)	R/W	○	STX
CRCODE	"0" to "255"	13 (0x0D)	R/W	○	CR
CNTCODE	"0" to "255"	94 (0x5E)	R/W	○	CNTBY
LABEL_ROTATION	"0": 0 degree "1": 90 degree "2": 180 degree "3": 270 degree	0	R/W	○	Label Rotation
SOP_EMULATION	“0”: Disable "1": Prodigy Plus - 110 "2": Allegro - 220 "3": Prodigy - 250 "4" : Auto	4 (Auto)	R/W	○	SOP Emulation
COMPATIBLE_TTF	"0": Disable "1": Enable	0	R/W	○	Compatibility TTF
COMPATIBLE_GRAPHICS	"0": Disable "1": Enable	0	R/W	○	Compatibility Graphics
COMPATIBLE_COMPRESS	"0": Disable "1": Enable	0	R/W	○	Compatibility Compression
RIGHT_TO_LEFT_PRINT	"0": Disable "1": Enable	1	R/W	○	Right-to-left printing

[SDPL] section					
Name of setting item	Setting value	Initial value	R/W	Initial SD	Contents of Setting item
RECEIVE_TIMEOUT	"0": Disable "1" to "9999" (ms)	0	R/W	○	Receive time-out
FEED_ON_BLANK	"0": Disable "1": Enable	1	R/W	○	Feed on blank item
FORMAT_ATTRIBUTE_PRIORITIZE	"0": Commands "1": Settings	0	R/W	○	Format Attribute's priority
FORMAT_ATTRIBUTE	"0": XOR "1": Transparent "2": Opaque "3": Inverse	0	R/W	○	Format Attribute
PAUSE_MODE_PRIORITIZE	"0": Commands "1": Settings	0	R/W	○	Pause Mode's priority
PAUSE_MODE	"0": Disable "1": Enable	0	R/W	○	Pause Mode
1BYTE_CODEPAGE_PRIORITIZE	"0": Commands "1": Settings	0	R/W	○	1 Byte Codepage's priority
1BYTE_CODEPAGE	"0": UTF8 "1": 8859-1 "2": 8859-2 "3": 8859-5 "4": 852 "5": 850 "6": 858 "7": 1252	5 (850)	R/W	○	1 Byte Codepage
UNIT_PRIORITIZE	"0": Commands "1": Settings	0	R/W	○	SDPL Measure Unit's priority
UNIT	"0": inch "1": mm	0	R/W	○	SDPL Measure Unit
FONT_STYLE_PRIORITIZE	"0": Commands "1": Settings	0	R/W	○	Scalable Font Style's priority
BOLD_STYLE	"0": Disable "1": Enable	0	R/W	○	Bold Style
ITALIC_STYLE	"0": Disable "1": Enable	0	R/W	○	Italic Style
SENSOR_PRIORITIZE	"0": Commands "1": Settings	0	R/W	○	Sensor's priority
STATUS_REPLY_PRIORITIZE	"0": Commands "1": Settings	0	R/W	○	Feedback character reply's priority
STATUS_REPLY	"0": Disable "1": Enable	1	R/W	○	Feedback character reply
SOH_COMMAND_PRIORITIZE	"0": Commands "1": Settings	0	R/W	○	SOH command's priority
SOH_COMMAND(ALL)	"0": Disable	1	R/W	○	All SOH commands

[SDPL] section					
Name of setting item	Setting value	Initial value	R/W	Initial SD	Contents of Setting item
	“1”: Enable "2": CUSTOM				
SOH_COMMAND(SOH-B)	"0": Disable "1": Enable	1	R/W	○	SOH-B commands
SOH_COMMAND(SOH-C)	“0”: Disable “1”: Enable	1	R/W	○	SOH-C commands
SOH_COMMAND(OTHERS)	"0": Disable "1": Enable	1	R/W	○	Other SOH commands
MODULESEL_PRIORITIZE	"0": Commands "1": Settings	0	R/W	○	Module selection’s priority
MODULESEL	"0": A "1": B "2": C "3": D "4": F "5": G "6": H "7": I "8": J "9": X "10": Y "11": Z	0 (A)	R/W	○	Select modules

[STCL] section					
Name of setting item	Setting value	Initial value	R/W	Initial ST	Contents of Setting item
CONTROL_CODE	"0": AUTO "1": ESC|LF|NUL "2": 7B|7C|7D "3": CUSTOM	0	R/W	○	Control Code
CMD_HEAD1	"0" to "255"	27 (0x1B)	R/W	○	Command Head1
CMD_HEAD2	"0" to "255"	10 (0x0A)	R/W	○	Command Head2
CMD_HEAD3	"0" to "255"	0 (0x00)	R/W	○	Command Head3
EUROCODE	"0" to "255"	213 (0xD5)	R/W	○	EURO
ZEROSLASH	"0": Disable "1": Enable	0	R/W		Zero slash
HALFWIDTHSYM	"0": Disable "1": Enable	1	R/W	○	Half-width symbol
ROTATION	"0": 0° "1": 90°	0	R/W	○	Rotation
IGNOREPAPERSIZE	"0": Disable "1": Enable	0	R/W	○	Ignore Paper Size Command
300DPI_HEAD	"0": Disable	0	R/W	○	300DPI Head Compatiblity

[STCL] section					
Name of setting item	Setting value	Initial value	R/W	Initial	Contents of Setting item
				ST	
	"1": Enable				

[AEP] section					
Name of setting item	Setting value	Initial value	R/W	Initial	Contents of Setting item
				SA	
ENABLE	"0": Disable "1": Enable	0	R/W	○	AEP Enable or Disable

[SEPL] section					
Name of setting item	Setting value	Initial value	R/W	Initial	Contents of Setting item
				SE	
HOME_HORZ_OFFSET	"0" to "400" (dots)	0	R/W	○	Label home position horizontal offset
HOME_VERT_OFFSET	Unit: dots 609 dpi: "0" to "400" 305 dpi: "0" to "400" 203 dpi: "0" to "400"	0	R/W	○	Label home position vertical offset
MEMORY_DEVICE	"0": Internal RAM "1": Internal FLASH "2": Front USB "3": Rear USB	1	R/W	○	Memory Device use for storing and recalling fonts, forms and graphics objects.
SIM_300DPI_HEAD	"0": Disable "1": Enable	0	R/W	○	Simulates 300 dpi size and positioning of objects on the 305 dpi printer model.
LABEL_ROTATION	"0": 0 degree "1": 180 degree	0	R/W	○	Label Rotation

[Sequence]

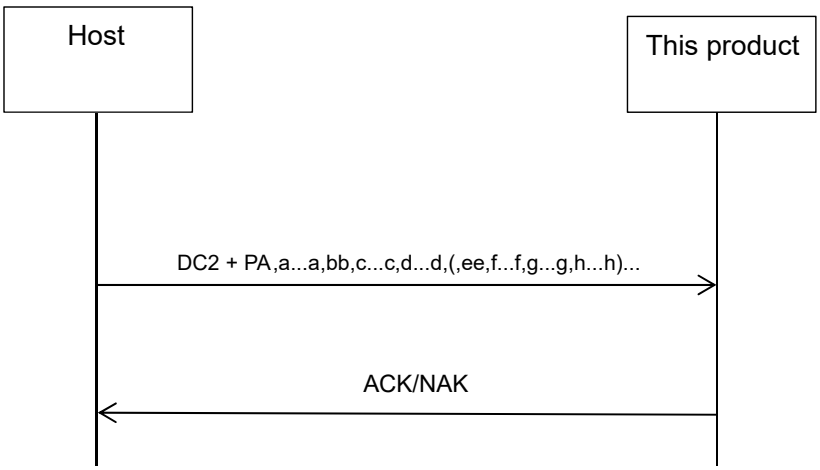

[DC2+PB] Printer Setting Information Acquisition

Command	DC2	PB	Parameter
Hexadecimal code	$<12>_{16}$	$<50>_{16}<42>_{16}$	(,aa(,b…b))+EOT(04h)
Initial value	None		

Valid range and term of command	When the power is OFF	-
	Valid range	-
	Printer operation in progress	The command can be received even during the printer operation.
	When acquiring label sensor information	Commands are not accepted while acquiring sensor information. ([NAK] return)
	Error	The command can be received even if an error is occurring.

[Function]

This command is used to acquire the printer information.

[Format]

[DC2]PB(,aa(,b...b))[EOT]

[Parameters]

Symbol	Parameter name	Valid range	Remarks
a	Identifier	Refer to [Identifier] below.	When omitted, all items will be returned.
b	Name of setting item	Refer to [DC2 + PA] command.	Acquire up to [EOT]

[Return data format (normal)]

[STX]a...a,bb,c...c,d...d(,ee,f...f,g...g)...[ETX]

[Return data]

Symbol	Parameter name	Valid range
a	Total number of data byte * This is the total number of bytes after parameter b. The delimiting comma between parameters a and b, and the ETX are not included.	Data size from the first identifier until before [ETX]
b(e)	Identifier	Refer to [Identifier] below.
c(f)	Data size of settings in bytes * The size of setting information is equivalent to the bytes by section from parameter d. The delimiting comma between the sections are not included.	Size of the corresponding setting information data
d(g)	Setting information data * Text format	Refer to the table of [Setting information data] below.

[Identifier]

Valid range

CA: Common settings

CB: Notification system

II: IEEE1284 settings

IR: RS-232C settings

IL: LAN settings

IU: USB settings

IW: WLAN settings

IB: Bluetooth settings

IE: EXT settings

IN: NFC settings

SB: SBPL settings

SZ: SZPL Settings

SI: SIPL Settings

SD: SDPL settings

ST: STCL settings

SE: SEPL settings

[Setting information data format]

"Name of setting item" + ":" + "Setting data" + "Line feed (0DH, 0AH)"

h…h:i…i[CR][LF](j…j:k…k[CR][LF])…

[Setting information data]

Symbol	Parameter name	Valid range
h(j…)	Name of setting item	Refer to the list of setting items of [DC2+PA].
i(k…)	Setting data	Refer to the list of setting items of [DC2+PA].

Data Example)

CA,12345,SPEED:4

LEVEL:5

CONCENTRATION:A

:

[Return data format (when a command error occurs)]

[NAK]<15>$_{16}$

[Exception processing]

Parameter name	Exception condition	
	A value outside the range is specified	The specified size and received size are different
Identifier	Command error	Invalid receive data

Terminology	Contents
Command error	The data received after a command error is determined is not considered as a parameter of this command.

[Sequence]

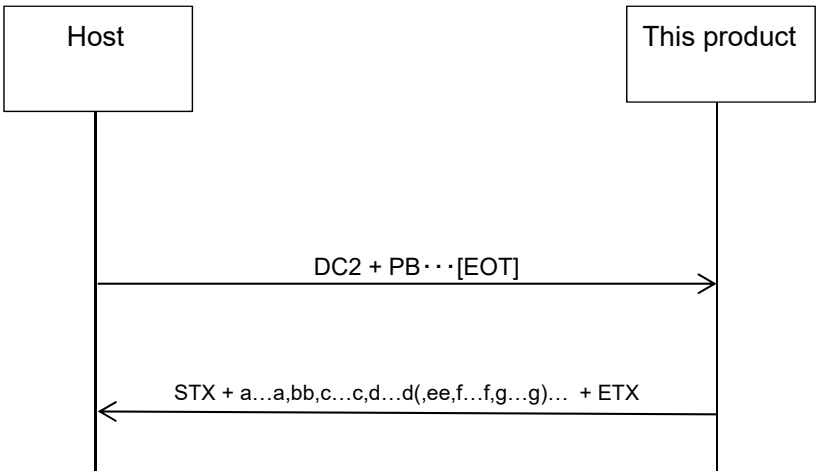

[Supplementary information]

- When identifiers are omitted, all data will be returned.
- When setting item names are specified, setting information of the item which was set will be returned.

[DC2+PC] Printer Device Information Acquisition

Command	DC2	PC	Parameter
Hexadecimal code	$<12>_{16}$	$<50>_{16}<43>_{16}$	None
Initial value	None		

Valid range and term of command	When the power is OFF	-
	Valid range	-
	Printer operation in progress	The command can be received even during the printer operation.
	When acquiring label sensor information	Commands are not accepted while acquiring sensor information. ([NAK] return)
	Error	The command can be received even if an error is occurring.

[Function]

Returning the printer device information.

[Format]

[DC2]PC

[Return data format (normal)]

[STX]a...a,b...b:c...c[CR][LF](d...d:e...e[CR][LF]) ... [ETX]

[Return data]

Symbol	Parameter name	Valid range
a	Total number of data byte * This is the total number of bytes after parameter b. The delimiting comma between parameters a and b, and the ETX are not included.	Data size from the first device information name up to before [ETX]
b(d)	Device information name * Text format	Refer to the printer device information list.
c(e)	Device information data * Text format	Refer to the printer device information list.

Data Example)

[STX]12345,MODEL: Model name[CR][LF]FW Ver:1.0.0[CR][LF]...[CR][LF] [ETX]

[Printer device information list]

No.	Description	Device information name	Device information data
1	Model name	MODEL	M…M M: Model name
2	Kernel version	KERNEL Ver	R…R R: OS release number
3	Main firmware version	MAIN FW Ver	V…V

No.	Description	Device information name	Device information data
			V: Version
4	Main firmware Creation date	MAIN FW Date	YYYYMMDD_HHMMSS TTT T: Time zone
5	Printer module Boot firmware Version	MODULE BOOT FW Ver	P…P.boot-V.V.V-S…S P: Platform name V: Version S: Release = Release version Alpha/Beta = Test version xxxuser = Custom version urgent = Urgent version
6	Printer module Boot firmware Creation date	MODULE BOOT FW Date	YY.MM.DD
7	Printer module Boot firmware Check sum	MODULE BOOT FW CHECKSUM	CCCC C: Check sum
8	Printer module Main firmware Version	MODULE MAIN FW Ver	P…P.main-V.V.V-S…S P: Platform name V: Version S: Release = Release version Alpha/Beta = Test version xxxuser = Custom version urgent = Urgent version
9	Printer module Main firmware Creation date	MODULE MAIN FW Date	YY.MM.DD
10	Printer module Main firmware Check sum	MODULE MAIN FW CHECKSUM	CCCC C: Check sum
11	PLD version of CONT board	CONT PLD Ver	VV V: Version
12	PLD version and FPGA version of interface board	INTF PLD/FPGA Ver	V_1 V_1 /V_2 V_2 V_1: PLD Version V_2: FPGA Version
13	LAN MAC Address	LAN MAC	XX:XX:XX:XX:XX:XX X: Alphanumeric
14	WLAN MAC Address	WLAN MAC	XX:XX:XX:XX:XX:XX X: Alphanumeric
15	BD address	BD	xxxxxxxxxxxx X: Alphanumeric
16	Head counter 1	Head Count1	Numeric value (unit: mm)
17	Head counter 2	Head Count2	Numeric value (unit: mm)
18	Head counter 3	Head Count3	Numeric value (unit: mm)
19	Life counter	Life Count	Numeric value (unit: mm)
20	Cutter counter	Cut Count	Numeric value (unit: count)
21	Dispense counter	Disp Count	Numeric value (unit: 1/24 mm)
22	Free space size in user area	MEM_FROM	Numeric value (unit: byte)
23	USB memory available size (Printer front port connection)	MEM_USB1	Numeric value (unit: byte)

No.	Description	Device information name	Device information data
24	USB memory available size (Printer rear port connection)	MEM_USB2	Numeric value (unit: byte)
25	Number of registered counts, number of registered bytes of SBPL form overlay SLOT1	SBPL_FOL_SLOT1	XXXX,YYYYYYYYYY X: Registration count Y: Number of registered bytes
26	Registration number of SBPL form overlay SLOT1	SBPL_FOL_SLOT1_No	XXX (, XXX, XXX···) X: Registration No., * Repeated as many times as the registration numbers * If the registration count is zero, the value is ignored.
27	Number of registered counts, number of registered bytes of SBPL format SLOT1	SBPL_FMT_SLOT1	XXXX,YYYYYYYYYY X: Registration count Y: Number of registered bytes
28	Registration number of SBPL format SLOT1	SBPL_FMT_SLOT1_No	XXX (, XXX, XXX···) X: Registration No., * Repeated as many times as the registration numbers * If the registration count is zero, the value is ignored.
29	Number of registered counts, number of registered bytes of SBPL graphic SLOT1	SBPL_GRA_SLOT1	XXXX,YYYYYYYYYY X: Registration count Y: Number of registered bytes
30	Registration number of SBPL graphic SLOT1	SBPL_GRA_SLOT1_No	XXX (, XXX, XXX···) X: Registration No., * Repeated as many times as the registration numbers * If the registration count is zero, the value is ignored.
31	Number of registered counts, number of registered bytes of SBPL BMP file SLOT1	SBPL_BMP_SLOT1	XXXX,YYYYYYYYYY X: Registration count Y: Number of registered bytes
32	Registration number of SBPL BMP file SLOT1	SBPL_BMP_SLOT1_No	XXX (, XXX, XXX···) X: Registration No., * Repeated as many times as the registration numbers * If the registration count is zero, the value is ignored.
33	Number of registered counts, number of registered bytes of SBPL PCX file SLOT1	SBPL_PCX_SLOT1	XXXX,YYYYYYYYYY X: Registration count Y: Number of registered bytes
34	Registration number of SBPL PCX file SLOT1	SBPL_PCX_SLOT1_No	XXX (, XXX, XXX···) X: Registration No., * Repeated as many times as the registration numbers * If the registration count is zero, the value is ignored.
35	Number of registered counts, number of registered bytes of SBPL external character SLOT1	SBPL_EXC_SLOT1	XXXX,YYYYYYYYYY X: Registration count

No.	Description	Device information name	Device information data
			Y: Number of registered bytes
36	Registration number of SBPL external character SLOT1	SBPL_EXC_SLOT1_No	XXX (, XXX, XXX···) X: Registration No., * Repeated as many times as the registration numbers * If the registration count is zero, the value is ignored.
37	Number of registered counts, number of registered bytes of SBPL TrueType font SLOT1	SBPL_TTF_SLOT1	XXXX,YYYYYYYYYY X: Registration count Y: Number of registered bytes
38	Registration number of SBPL TrueType font SLOT1	SBPL_TTF_SLOT1_No	XXX (, XXX, XXX···) X: Registration No., * Repeated as many times as the registration numbers * If the registration count is zero, the value is ignored.
39	Number of registered counts, number of registered bytes of SBPL form overlay SLOT2	SBPL_FOL_SLOT2	XXXX,YYYYYYYYYY X: Registration count Y: Number of registered bytes
40	Registration number of SBPL form overlay SLOT2	SBPL_FOL_SLOT2_No	XXX (, XXX, XXX···) X: Registration No., * Repeated as many times as the registration numbers * If the registration count is zero, the value is ignored.
41	Number of registered counts, number of registered bytes of SBPL format SLOT2	SBPL_FMT_SLOT2	XXXX,YYYYYYYYYY X: Registration count Y: Number of registered bytes
42	Registration number of SBPL format SLOT2	SBPL_FMT_SLOT2_No	XXX (, XXX, XXX···) X: Registration No., * Repeated as many times as the registration numbers * If the registration count is zero, the value is ignored.
43	Number of registered counts, number of registered bytes of SBPL graphic SLOT2	SBPL_GRA_SLOT2	XXXX,YYYYYYYYYY X: Registration count Y: Number of registered bytes
44	Registration number of SBPL graphic SLOT2	SBPL_GRA_SLOT2_No	XXX (, XXX, XXX···) X: Registration No., * Repeated as many times as the registration numbers * If the registration count is zero, the value is ignored.
45	Number of registered counts, number of registered bytes of SBPL BMP file SLOT2	SBPL_BMP_SLOT2	XXXX,YYYYYYYYYY X: Registration count Y: Number of registered bytes
46	Registration number of SBPL BMP file SLOT2	SBPL_BMP_SLOT2_No	XXX (, XXX, XXX···)

No.	Description	Device information name	Device information data
			X: Registration No., * Repeated as many times as the registration numbers * If the registration count is zero, the value is ignored.
47	Number of registered counts, number of registered bytes of SBPL PCX file SLOT2	SBPL_PCX_SLOT2	XXXX,YYYYYYYYYY X: Registration count Y: Number of registered bytes
48	Registration number of SBPL PCX file SLOT2	SBPL_PCX_SLOT2_No	XXX (, XXX, XXX・・・) X: Registration No., * Repeated as many times as the registration numbers * If the registration count is zero, the value is ignored.
49	Number of registered counts, number of registered bytes of SBPL external character SLOT2	SBPL_EXC_SLOT2	XXXX,YYYYYYYYYY X: Registration count Y: Number of registered bytes
50	Registration number of SBPL external character SLOT2	SBPL_EXC_SLOT2_No	XXX (, XXX, XXX・・・) X: Registration No., * Repeated as many times as the registration numbers * If the registration count is zero, the value is ignored.
51	Number of registered counts, number of registered bytes of SBPL TrueType font SLOT2	SBPL_TTF_SLOT2	XXXX,YYYYYYYYYY X: Registration count Y: Number of registered bytes
52	Registration number of SBPL TrueType font SLOT2	SBPL_TTF_SLOT2_No	XXX (, XXX, XXX・・・) X: Registration No., * Repeated as many times as the registration numbers * If the registration count is zero, the value is ignored.
53	Printer Serial	PR_SN	XXXXXXXX X: alphanumeric

[Precautions during use]

- The printer device information update cycle must be five seconds or longer. When sending this command in continuation, be sure to set an interval of five seconds or more.
- When a USB memory is used, only the available space of the memory connected first is returned even when a connection is established via the HUB.
- It takes more than one second to create the return data immediately after the startup in order to obtain the checksum of the module.
- It takes more time to create the return data when there are a lot of registrations by SBPL command. (It takes approx. 1.5 seconds to register 10000 data.)

[Sequence]

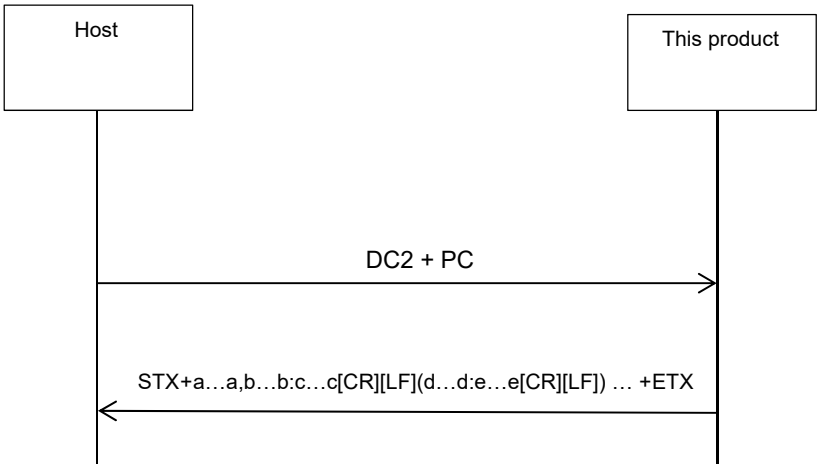

[DC2+PD] Each Sensor Information Acquisition

Command	DC2	PD	Parameter
Hexadecimal code	<12>$_{16}$	<50>$_{16}$<44>$_{16}$	None
Initial value	None		

Valid range and term of command	When the power is OFF	-
	Valid range	-
	Printer operation in progress	The command can be received even during the printer operation.
	When acquiring label sensor information	Commands are not accepted while acquiring sensor information. ([NAK] return)
	Error	The command can be received even if an error is occurring.

[Function]

Acquiring the information of each sensor. The sensor information corresponds to the information immediately after the reception of the command.

[Format]

[DC2]PD

[Return data format (normal)]

[STX]a...a,b...b:c...c,(d...d:e...e) ... [ETX]

Symbol	Parameter name	Valid range
a	Total number of data byte * This is the total number of bytes after parameter b. The delimiting comma between parameters a and b, and the ETX are not included.	Data size from the first identifier until before [ETX]
b(d)	Sensor information name * Text format	Refer to the sensor information data list.
c(e)	Sensor information data * Text format	Refer to the sensor information data list.

Data Example)

[STX]xx,IM:0.2/SL1.5,GAP:0.9/SL1.0...[ETX]

[Return data format (when a command error occurs)]

[NAK]<15>$_{16}$

[Sensor information data list]

No.	Sensor information name	Description	Sensor information data
1	IM	I-Mark sensor	X.X/SLY.Y X.X = 0.0 to 3.3: Sensor level Y.Y = 0.0 to 3.3: Slice level
2	GAP	Gap sensor	X.X/SLY.Y X.X = 0.0 to 3.3: Sensor level Y.Y = 0.0 to 3.3: Slice level
3	HEAD OPEN	Head open	0: Close, 1: Open
4	CUTTER OPEN	Cutter open	0: Close, 1: Open
5	DISPENSER	Dispense sensor	0: Without label, 1: With label
6	HEAD TEMP	Head thermistor	-XX to XX: Thermistor temperature
7	RIBBON	Ribbon slit sensor	0: Slit ON, 1: Slit OFF
8	SENSOR HIGH	High value of active sensors	X.X = 0.0 to 3.3: Sensor level
9	SENSOR LOW	Low value of active sensors	X.X = 0.0 to 3.3: Sensor level

[Supplementary information]

- When sending this command in continuation, be sure to set a fixed interval (100 msec or more).
- If the sensor information acquisition processing for each sensor does not finish within 100 msec, a timeout is thought to have occurred, and [NAK] is returned. A timeout may occur during the product operation.
- SENSOR HIGH, SENSOR LOW is the value of the last label that passed through the sensor. Therefore it may sometimes be different from test printing results (the value is measured with the label before printing).
- If the sensor type is set to NONE, the SENSOR HIGH and SENSOR LOW values return as 0.0.

[Sequence]

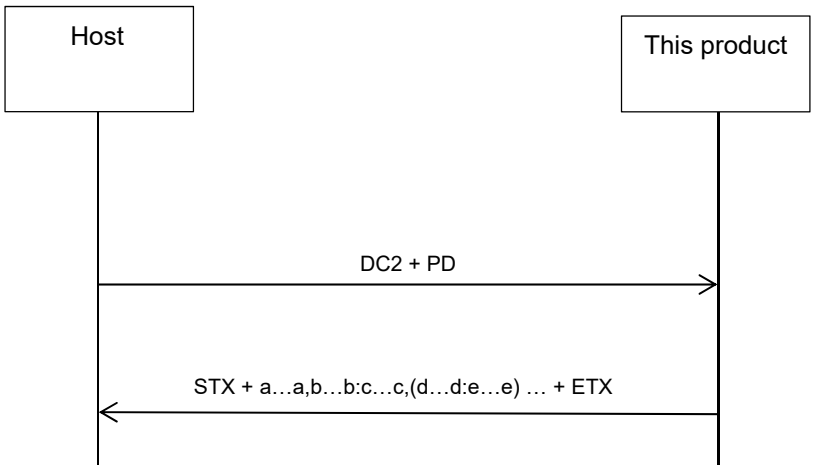

[DC2+PG] Printer Status Information Acquisition

Command	DC2	PG	Parameter
Hexadecimal code	$<12>_{16}$	$<50>_{16}<47>_{16}$	None
Initial value	None		

Valid range and term of command	When the power is OFF	-
	Valid range	-
	Printer operation in progress	The command can be received even during the printer operation.
	When acquiring label sensor information	Commands are not accepted while acquiring sensor information. ([NAK] return)
	Error	The command can be received even if an error is occurring.

[Function]

Returning the status of this product.

[Format]

[DC2]PG

[Return data format (normal)]

[STX]a...a,b...bc,d...de,...[ETX] * There is no ", (comma)" before ETX

Symbol	Parameter name	Valid range
a	Total number of data byte * This is the total number of bytes after parameter b. The delimiting comma between parameters a and b, and the ETX are not included.	Data size from the first identifier until before [ETX]
b(d)	Printer status information name * Text format	Refer to the printer status information data list.
c(e)	Printer status information data * Text format	Refer to the printer status information data list.

Data Example)

[STX]32,PS0,RS0,RE0,PE0,EN00,BT0,Q000000[ETX]

[Printer status information data list]

No.	Description	Printer status information name	Printer status information data
1	Printer Status	PS	0: Standby (waiting for receiving data) 1: Waiting for dispensing 2: Analyzing 3: Printing 4: Offline 5: Error
2	Receive buffer status	RS	0: Buffer available 1: Buffer near full

No.	Description	Printer status information name	Printer status information data
			2: Buffer full
3	Ribbon status * Monitoring can be performed during printing and feeding. The correct value cannot be acquired when the operation has stopped.	RE	0: Ribbon present 1: Ribbon near end 2: No ribbon 3: Direct thermal model
4	Media status * Monitoring can be performed during printing and feeding. The correct value cannot be acquired when the operation has stopped.	PE	0: Media present (including during startup) 1: Label near end 2: No media
5	Error No. *1	EN	00: Online * Not an error. Return is performed. 01: Offline * Not an error. Return is performed. 02: Machine error 03: Memory error 04: Program error 05: Setting information error (FLASH-ROM error) 06: Setting information error (EE-PROM error) 07: Download error 08: Parity error 09: Over run 10: Framing error 11: LAN timeout error 12: Buffer over 13: Head open 14: Paper end 15: Ribbon end 16: Media error 17: Sensor error 18: Printhead error 19: Cover open error 20: Memory/Card type error 21: Memory/Card read/write error 22: Memory/Card full error 23: Memory/Card no battery error 24: Ribbon saver error 25: Cutter error 26: Cutter sensor error 27: Stacker full error 28: Command error 29: Sensor error at Power-On 31: Interface card error 32: Rewinder error 33: Other error 35: Head density error

No.	Description	Printer status information name	Printer status information data
			36: Kanji data error 37: Calendar error 38: Item No error 39: BCC error 40: Cutter cover open error 41: Ribbon rewind non-lock error 42: Communication timeout error 43: Lid latch open error 44: No media error at Power-On 45: SD card access error 46: SD card full error 47: Head lift error 48: Head overheat error 49: SNTP time correction error 50: CRC error 51: Cutter motor error 53: Scanner reading error 54: Scanner checking error 55: Scanner connection error 56: Bluetooth Module error 57: EAP authentication error (EAP failed) 58: EAP authentication error (TimeOut) 59: Battery error 60: Low Battery error 61: Low Battery error (Charging) 62: Battery not installed error 63: Battery temperature error 64: Battery deterioration error 65: Motor temperature error 66: Inside chassis temperature error 67: Jam error 68: SIPL Field full error 69: Power off error while charging 70: WLAN module error 71: Option inconsistency error 72: Bad battery error (Caution) 73: Bad battery error (Warning) 74: Power off error 76: Barcode reader connection error 77: Barcode reading error 78: Barcode reading error (Verification start position abnormality) 79: Barcode verification error 80: NFC Module error 81: NFC Command error 133: RTC module error
6	Battery status	BT	0: Normal 1: Battery near end

No.	Description	Printer status information name	Printer status information data
			2: Battery error
7	Remaining number of print	Q	000000 to 999999: 6-digit remaining number of print

*1 Described error numbers contain errors which will never occur on this product.

[Return data format (when a command error occurs)]

[NAK]<15>$_{16}$

[Supplementary Explanation]

- In the case of power supply, the battery status is always returned as 0: Normal.
- The media status is returned as "Media present" unless paper end has reached during printing.
- The correct value will be returned for receive buffer, ribbon end, media status, and battery when the error is updated.

[Sequence]

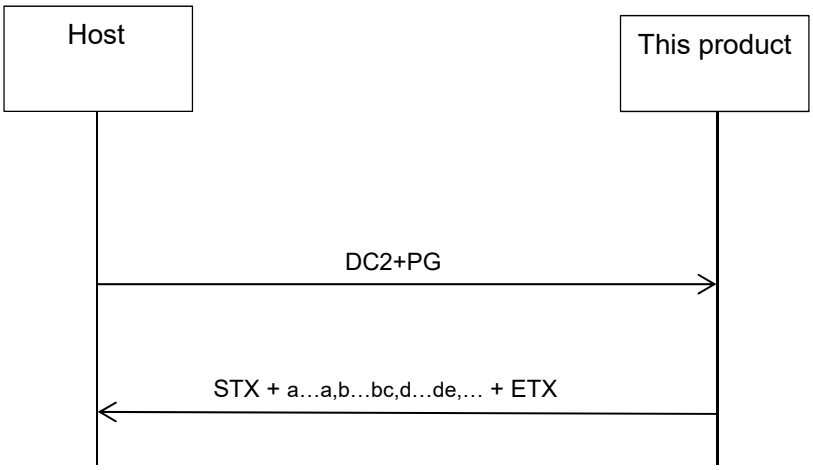

[DC2+PH] Cancel Request

Command	DC2	PH	Parameter
Hexadecimal code	<12>$_{16}$	<50>$_{16}$<48>$_{16}$	None
Initial value	None		

Valid range and term of command	When the power is OFF	-
	Valid range	-
	Printer operation in progress	The command can be received even during the printer operation.
	Error	The command can be received even during the printer operation.

[Function]

Canceling print jobs and clears the entire contents of receive buffer.

[Format]

[DC2]PH

[Return data format (normal)]

[ACK]<06>$_{16}$

[Return data format (when a command error occurs)]

[NAK]<15>$_{16}$

[Supplementary Explanation]

- The response data is returned after the cancel processing ends.
- After sending the cancel request command, wait for response reception before sending the next data.

[Sequence]

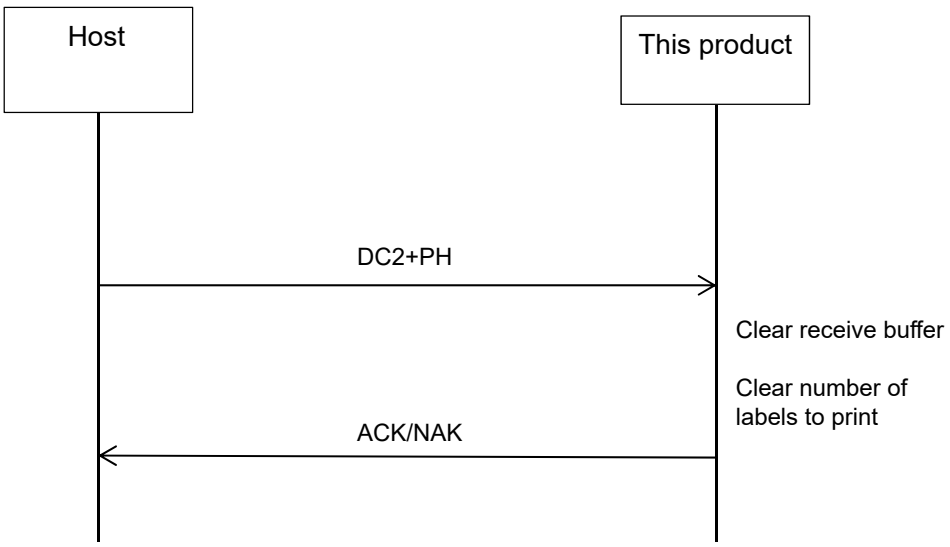

[DC2+PI] Application Change

Command	DC2	PI	Parameter
Hexadecimal code	<12>$_{16}$	<50>$_{16}$<49>$_{16}$	,aa
Initial value	None		

Valid range and term of command	When the power is OFF	-
	Valid range	-
	Printer operation in progress	The command cannot be received during the printer operation. ([NAK] return)
	When acquiring label sensor information	Commands are not accepted while acquiring sensor information. ([NAK] return)
	Error	Commands cannot be received even if an error is occurring. ([NAK] return)
	Others	Commands cannot be received other than when the screen is Online or Offline. ([NAK] return)

[Function]

This command is used to switch applications such as SBPL and SZPL.

[Format]

[DC2]PI,aa

[Parameter]

Symbol	Parameter name	Valid range	Acquisition method
aa	Identifier	00: AUTO SB: SBPL SZ: SZPL SI: SIPL SD: SDPL ST: STCL SE: SEPL	Two characters fixed acquisition

[Return data format (normal)]

[ACK]<06>$_{16}$

[Return data format (when a command error occurs)]

[NAK]<15>$_{16}$

[Exception processing]

Parameter name	Exception condition	
	A value outside the range is specified	The specified size and received size are different
Identifier	Command error	Invalid receive data

Terminology	Contents
Command error	The data received after a command error is determined is not considered as a parameter of this command.
Invalid receive data	The data corresponding to Byte 2 and thereafter of the identifier is ignored.

[Supplementary Explanation]

- Setting value of this product will be switched when switching the application. So, obtaining and saving the setting of the application before switching, then switching it, and then put it back to the original application, after that set it by previously saved settings, and it performs the operation before switching it.

  e.g.) When switching the application such as SBPL -> STCL -> SBPL

  1. Obtain and save the setting value of SBPL state (obtain the setting value by AIOT, [DC2]PB[EOT] and so on).
  2. Switch the application to STCL.
  3. Switch the application to SBPL.
  4. Set the setting value obtained and saved in the step 1).

- Please send this command in a state which this product is not working anything in Offline or Online standby state waiting state.

  The result of this command sent in pause status during cancellation is not guaranteed. In such case, restart this product.

- AUTO mode will not be available unless you reboot after switching to AUTO mode. This product works with the application before the change until it reboots.

[Sequence]

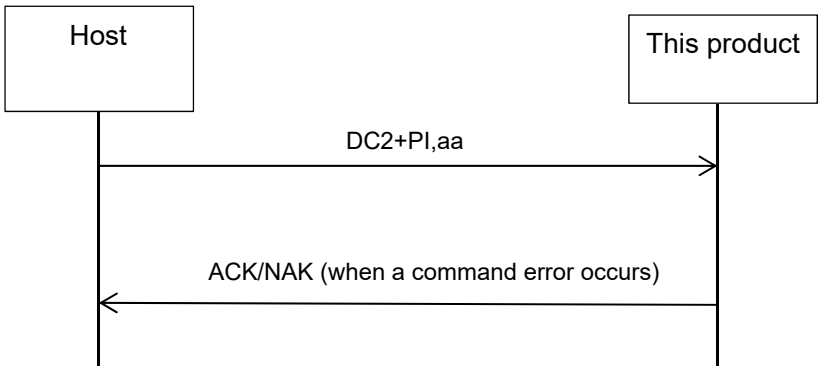

[DC2+PN] Request to Return Label Pitch Size

Command	DC2	PN	Parameter
Hexadecimal code	<12>$_{16}$	<50>$_{16}$<4E>$_{16}$	None
Initial value	None		

Valid range and term of command	When the power is OFF	-
	Valid range	-
	Printer operation in progress	The command can be received even during the printer operation.
	During an error	The command is accepted during an error occurs.
	Error	The command can be received even if an error is occurring.

[Function]

Returning the result of label pitch measurement by each label by request from host.

[Format]

[DC2]PN

[Return data format (normal)]

[STX]a...a,bbb,cccccc[ETX]

Data Example)

[STX]10,203,002172[ETX]

Symbol	Parameter name	Valid range
a	Total number of data byte * This is the total number of bytes after parameter b. The delimiting comma between parameters a and b, and the ETX are not included.	Size of data from b to before [ETX]
b	Head density	203: 203 dpi 305: 305 dpi 609: 609 dpi
c	Label pitch size (dots)	Fixed 6 digits

[Return data format (when a command error occurs)]

[NAK]<15>$_{16}$

[Supplementary Explanation]

- I-Mark and Gap needs to pass over the sensor twice in order to measure the length of label gap. See below for the conditions to detect:
  - Feed 2 labels by running <IK>0 command more than 2 times.
  - Press FEED key on this product twice to feed 2 labels.
- 000000(0x30, 0x30, 0x30, 0x30, 0x30, 0x30) is returned if the label pitch size for invalid sensor is not finalized for the 1st feed right after power on, right after head open/close and after sensor type switching.

- The label length to be returned includes the gap between labels.
- The label pitch size to be returned will show the value of last label that passes over the sensor. Therefore label will exist in between head and sensor with a short pitch label, and it may not be equal to the printed/ejected label's pitch size. The minimum label length would be 70 mm.
- This is available only when sensor is enabled. Returns "000000" when sensor is disabled.
- If there is a missing label in the roll in using gap sensor, the valid label length and the distance for the missing label are added together to be returned depending on sensor level.
- The label length detected by this product includes around the same amount of tolerance as print precision.
- Print speed and print darkness gives little or no affect to the detected label length. However it may vary if you change print speed depending on the sensitivity of the sensor.
- Label length is measured once again at FEED when the sensor type is switched from LCD menu. When you send DC2+PN command the label length before switching is returned. Then, this product returns the unfinalized 0 dot in the first FEED, followed by the re-measured label length at the 2nd FEED. And label length may vary depending on the characteristic of the sensor.

[Usage example]

Get label length by feeding 2 labels

```
<A>
<IK>0      Feed 1st label
<Z>
           ------------------------------------------------------
<A>
<IK>0      Feed 2nd label
<Z>
           ------------------------------------------------------
           Feed completed ← Label length is finalized here
           ------------------------------------------------------
DC2+PN     Request label length
           ------------------------------------------------------
           Feeding necessary number of labels has been completed ← Label length is measured
           by each label and then finalized
           ------------------------------------------------------
DC2+PN     Request for label length ← You can get the latest label length
```

The correct label length is returned if you feed twice manually and request with DC2+PN after setting label, even without using <IK>0 command.

[Sequence]

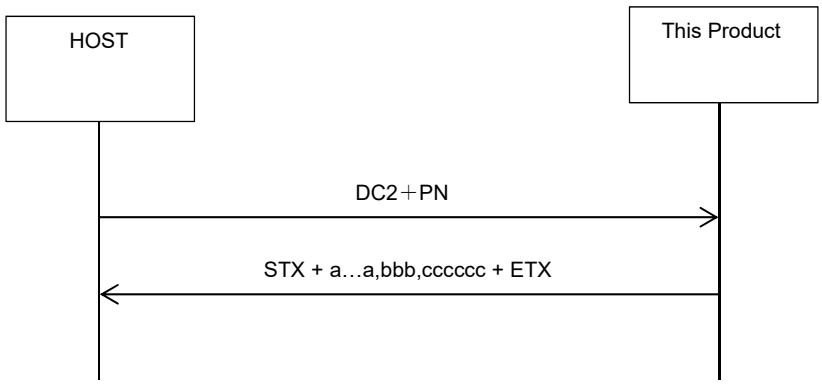

[DC2+DB] Initialization

Command	DC2	DB	Parameter
Hexadecimal code	<12>$_{16}$	<44>$_{16}$<42>$_{16}$	,aa
Initial value	None		

Valid range and term of command	When the power is OFF	-
	Valid range	-
	Printer operation in progress	The command cannot be received during the printer operation. ([NAK] return)
	When acquiring label sensor information	Commands are not accepted while acquiring sensor information. ([NAK] return)
	Error	Commands cannot be received even if an error is occurring. ([NAK] return)

[Function]

Initializing this product settings.

[Format]

[DC2]DB,aa

[Parameter]

Symbol	Parameter name	Valid range	Initialization target		Acquisition method
a	Identifier	CA: Common settings initialization	[PRINTER] section		Two characters fixed acquisition
		CB: Warning function initialization	[COUNT] section		
		II: IEEE1284 settings initialization	[IEEE1284] section		
		IR: RS-232C settings initialization	[RS-232C] section		
		IL: LAN settings initialization	[LAN] section		
		IU: USB settings initialization	[USB] section		
		IW: WLAN settings initialization	[WLAN] section		
		IB: Bluetooth settings initialization	[BLUETOOTH] section		
		IE: EXT settings initialization	[EXT] section		
		IN: NFC settings initialization	[NFC] section		
		SB: SBPL settings initialization	[SBPL] section		
		SZ: SZPL settings initialization	[SZPL] section		
		SI: SIPL settings initialization	[SIPL] section		
		SD: SDPL settings initialization	[SDPL] section		
		ST: STCL settings initialization	[STCL] section		
		SA: AEP settings initialization	[AEP] section		
		CX: Registration information initialization	SBPL, SZPL, SIPL, SDPL,	Download font	
				TrueType	

Symbol	Parameter name	Valid range	Initialization target		Acquisition method
			STCL		
			Log	Image	
				Hex Dump	
				Error	
				Key	
				Date	
				Head	
				Buffer	
			SBPL	BMP	
				Overlay	
				Format	
				PCX	
				Graphic	
				External character	
				TrueType	
				BJD	

[Return data format (normal)]

[ACK]<06>$_{16}$

[Return data format (when a command error occurs)]

[NAK]<15>$_{16}$

[Exception processing]

Parameter name	Exception condition	
	A value outside the range is specified	The specified size and received size are different
Identifier	Command error	Invalid receive data

Terminology	Description
Command error	Initialization is not performed. The data received after a command error is determined is not considered as a parameter of this command.
Invalid receive data	The data corresponding to Byte 2 and thereafter is ignored.

[Supplementary Explanation]

- Refer to "[DC2+PA] Printer setting command" in this document for the items to be initialized in each identifier.
- If you initialize the interface settings, a response may not be returned.

[Sequence]

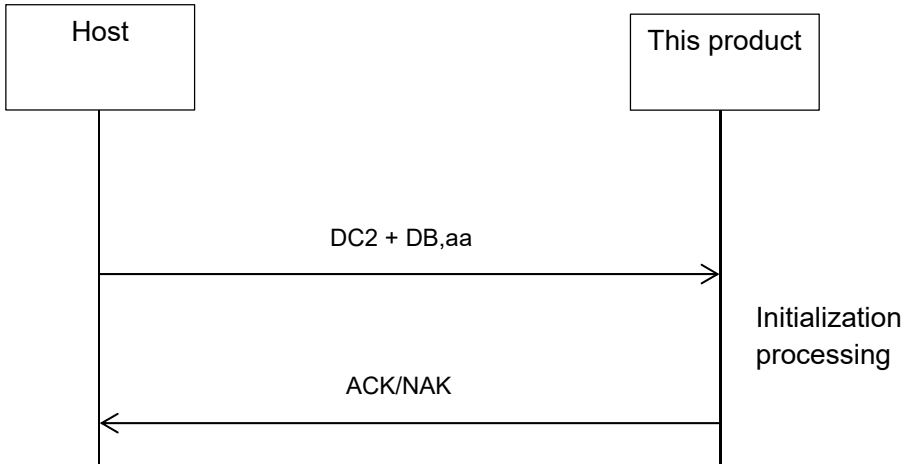
Host
This product
DC2 + DB,aa
Initialization
processing
ACK/NAK

[DC2+DC] Reset

Command	DC2	DC	Parameter
Hexadecimal code	<12>$_{16}$	<44>$_{16}$<43>$_{16}$	None
Initial value	None		

Valid range and term of command	When the power is OFF	-
	Valid range	-
	Printer operation in progress	The command cannot be received during the printer operation. ([NAK] return)
	When acquiring label sensor information	Commands are accepted while acquiring sensor information.
	Error	The command can be received even if an error is occurring.

[Function]

Restarting this product.

[Format]

[DC2]DC

[Response (only during printing)]

[NAK]<15>$_{16}$

[Sequence]

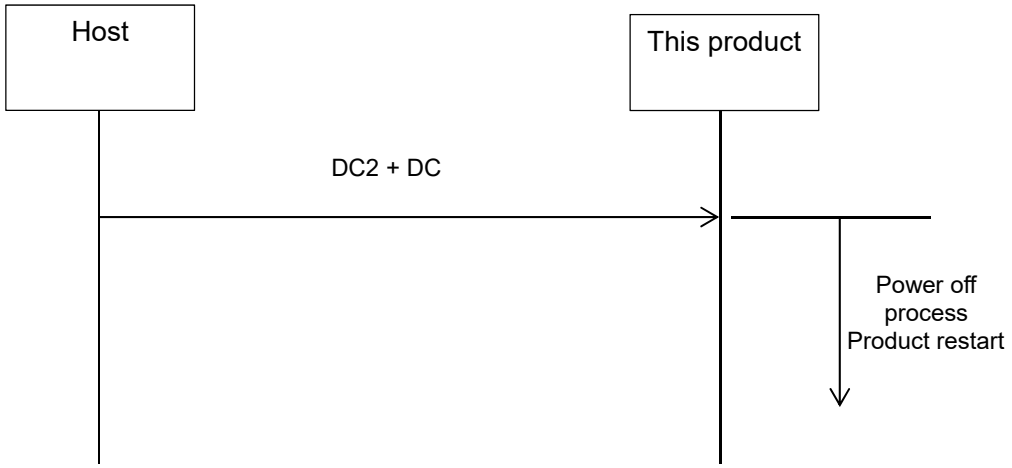

[DC2+DD] Power OFF

Command	DC2	DD	Parameter
Hexadecimal code	$<12>_{16}$	$<44>_{16}<44>_{16}$	None
Initial value	None		

Valid range and term of command	When the power is OFF	-
	Valid range	-
	Printer operation in progress	The command cannot be received during the printer operation. ([NAK] return)
	When acquiring label sensor information	Commands are accepted while acquiring sensor information.
	Error	The command can be received even if an error is occurring.

[Function]

Turning OFF this product.

[Format]

[DC2]DD

[Response (only during printing)]

[NAK]$<15>_{16}$

[Sequence]

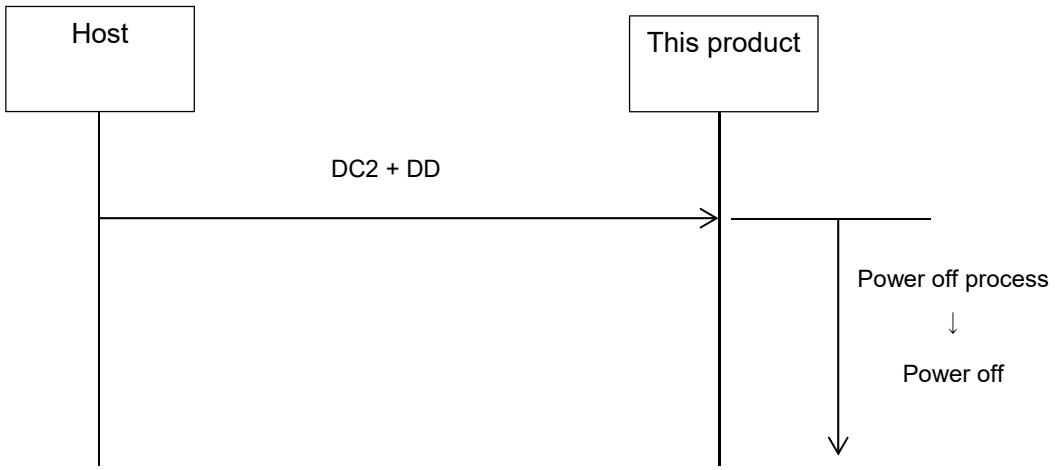

[DC2+DE] File Download

Command	DC2	DE	Parameter
Hexadecimal code	<12>$_{16}$	<44>$_{16}$<45>$_{16}$	,aa,b,c...c,d...d,e...e
Initial value	None		

Valid range and term of command	When the power is OFF	The file is maintained.
	Valid range	-
	Printer operation in progress	The command cannot be received during the printer operation. ([NAK] return)
	When acquiring label sensor information	Commands are not accepted while acquiring sensor information. ([NAK] return)
	Error	The command can be received even if an error is occurring.

[Function]

Downloading the specified file.

[Format]

[DC2]DE,aa,b,c...c,d...d,e...e

[Parameters]

Symbol	Parameter name	Valid range	Acquisition method
a	Identifier	SB: SBPL settings SZ: SZPL settings SI: SIPL settings SD: SDPL settings ST: STCL settings CA: Common settings (when specifying other than font logo and TrueType fonts)	Two characters fixed acquisition
b	File type	0: Font/logo 1: TrueType font 2: Wireless LAN certificate (Wi-Fi Root CA) 3: Wireless LAN certificate (Wi-Fi Client Certificate) 4: Wireless LAN certificate (Wi-Fi Private Key) 5: Wireless LAN certificate (Wi-Fi EAP_FAST PAC_file) 6: HTTPS certificate	One character fixed acquisition
c	File name	Data within 255 characters including the following character groups. ▪ Alphabet ▪ Numeral ▪ Hyphen ("-") ▪ Underscore ("_") ▪ Period (".")	Acquire up to ","
d	File size	0 to 999999999 (bytes)	Acquire up to ","

Symbol	Parameter name	Valid range	Acquisition method
e	File data	-	Equivalent to file size

[Return data format (normal)]

[ACK]<06>$_{16}$

[Return data format (when a command error occurs)]

[NAK]<15>$_{16}$

[Return data format (when the same file name error occurs)]

1<31>$_{16}$

[Exception processing]

Parameter name	Exception condition		
	A value outside the range is specified	The specified size and received size are different	When the same file name
Identifier	Command error	Command error	-
File type	Command error	Command error	-
File name	Command error	-	Same file name error
File size	Command error	-	-
File data	-	Invalid receive data	-

Terminology	Description
Command error	Downloading is not performed. The data received after a command error is determined is not considered as a parameter of this command.
Same file name error	The file is not saved.
Invalid receive data	The data exceeding the file size is ignored.

[Supplementary Explanation]

- Send this command when printing has stopped. The content of the response data is not guaranteed even when this command is received during printing.
- When you specify SZPL for "Parameter a: Identifier," "0: Font/logo," "1: TrueType font" settings of "Parameter b: File type" will be ignored.

[Sequence]

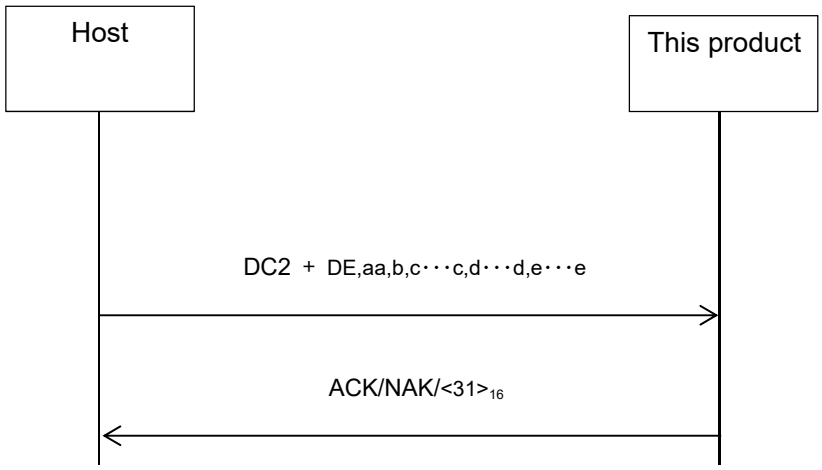

[DC2+DF] File Name Information Acquisition

Command	DC2	DF	Parameter
Hexadecimal code	<12>$_{16}$	<44>$_{16}$<46>$_{16}$	,aa,b
Initial value	None		

Valid range and term of command	When the power is OFF	-
	Valid range	-
	Printer operation in progress	The command cannot be received during the printer operation. ([NAK] return)
	When acquiring label sensor information	Commands are not accepted while acquiring sensor information. ([NAK] return)
	Error	The command can be received even if an error is occurring.

[Function]

Returning a list of file names of the specified folder.

[Format]

[DC2]DF,aa,b

[Parameters]

Symbol	Parameter name	Valid range	Acquisition method
a	Language	SB: SBPL settings SZ: SZPL settings SI: SIPL settings SD: SDPL settings ST: STCL settings CA: Common settings (when specifying other than font logo and TrueType fonts)	Two characters fixed acquisition
b	File type	0: Font/logo 1: TrueType font 2: Wireless LAN certificate (Wi-Fi Root CA) 3: Wireless LAN certificate (Wi-Fi Client Certificate) 4: Wireless LAN certificate (Wi-Fi Private Key) 5: Wireless LAN certificate (Wi-Fi EAP_FAST PAC_file) 6: HTTPS certificate	One character fixed acquisition

[Return data format (normal, data exists)]

[STX]a…a,b…b(,c…c)[ETX]

Data example) [STX]xxxx,SBPL_001.dfl, SBPL_002.dfl[ETX]

Symbol	Parameter name	Valid range
a	Total number of data byte	Data size from the first identifier until before [ETX]

Symbol	Parameter name	Valid range
	* This is the total number of bytes after parameter b. The delimiting comma between parameters a and b, and the ETX are not included.	
b(c)	File name	

[Return data format (normal, no file)]

[STX]0[ETX]

[Return data format (when a command error occurs)]

[NAK]<15>$_{16}$

[Exception processing]

Parameter name	Exception condition	
	A value outside the range is specified	The specified size and received size are different
Language	Command error	Command error
File type	Command error	Invalid receive data

Conditions	Exception condition
When directory of the specified parameter does not exist. (Condition: Never registered in the past and so on.)	Command error

Terminology	Description
Command error	The file name list is not returned. The data received after a command error is determined is not considered as a parameter of this command.
Invalid receive data	The subsequent data is ignored.

[Supplementary Explanation]

- Send this command when printing has stopped. The content of the response data is not guaranteed even when this command is received during printing.
- When you specify SZPL for "Parameter a: Language," "0: Font/logo," "1: TrueType font" settings of "Parameter b: File type" will be ignored. So all file names registered with SZPL will return.

[Sequence]

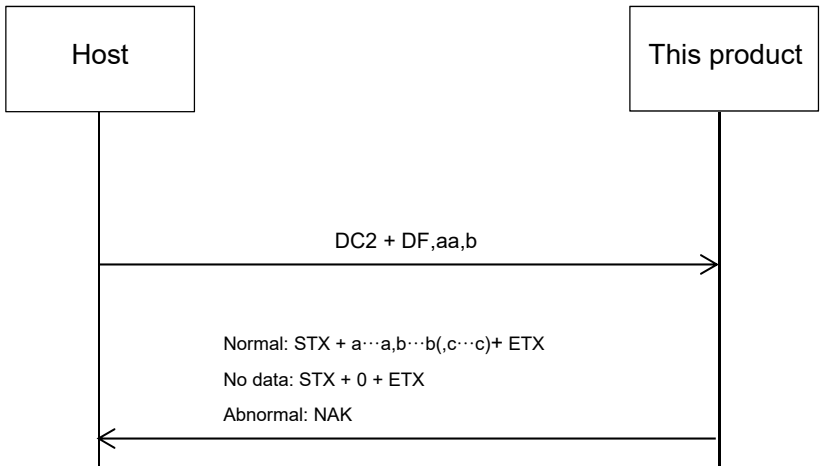

[DC2+DG] File Information Acquisition

Command	DC2	DG	Parameter
Hexadecimal code	<12>$_{16}$	<44>$_{16}$<47>$_{16}$	,aa,b,cccccc,ddddddd
Initial value	None		

Valid range and term of command	When the power is OFF	-
	Valid range	-
	Printer operation in progress	The command cannot be received during the printer operation. ([NAK] return)
	When acquiring label sensor information	Commands are not accepted while acquiring sensor information. ([NAK] return)
	Error	The command can be received even if an error is occurring.

[Function]

Returning the specified file data information.

[Format]

[DC2]DG,aa,b,cccccc,ddddddd

[Parameters]

Symbol	Parameter name	Valid range	Acquisition method
a	Language	SB: SBPL settings SZ: SZPL settings SI: SIPL settings SD: SDPL settings ST: STCL settings	Two characters fixed acquisition
b	File type	0: Font/logo 1: TrueType font	One character fixed acquisition
c	File name size (byte)	1 to 255	Acquire up to ","
d	File name *1 Only the file name is specified.	Data including the following character groups ▪ Alphabet ▪ Numeral ▪ Hyphen ("-") ▪ Underscore ("_") ▪ Period (".")	Acquired up to the file name size

[Return data format (normal, data exists)]

[STX]a…a,b…b[ETX]

Symbol	Parameter name	Valid range
a	Total number of data byte * This is the total number of bytes after parameter b. The delimiting comma between parameters a and b, and the ETX are not included.	Data size from the first identifier until before [ETX]

Symbol	Parameter name	Valid range
d	File data	

[Return data format (normal, no data)]

[STX]0[ETX]

[Return data format (when a command error occurs)]

[NAK]<15>$_{16}$

[Exception processing]

Parameter name	Exception condition	
	A value outside the range is specified	The specified size and received size are different
Language	Command error	Invalid receive data
File type	Command error	Command error
File name size	Command error	Excessively small: Command error, Excessively large: Remaining data standby
File name	Command error	Excessively small: Remaining data standby, Excessively large: Command error

Terminology	Description
Command error	The file name list is not returned. The data received after a command error is determined is not considered as a parameter of this command.
Invalid receive data	The subsequent data is ignored.

[Supplementary Explanation]

- When a file name is bigger than the size of the file name and still the file name is valid, it operates and finishes normally.
- When you specify SZPL for "Parameter a: Language," "0: Font/logo," "1: TrueType font" settings of "Parameter b: File type" will be ignored.

[Sequence]

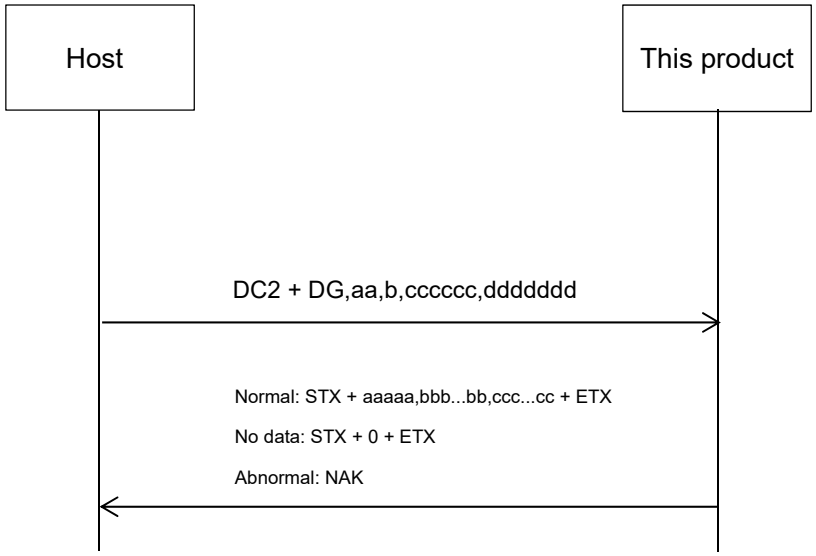

[DC2+DH] File Deletion

Command	DC2	DH	Parameter
Hexadecimal code	<12>$_{16}$	<44>$_{16}$<48>$_{16}$	aa,b,c(,ddddd,eeeee)
Initial value	None		

Valid range and term of command	When the power is OFF	-
	Valid range	-
	Printer operation in progress	The command cannot be received during the printer operation. ([NAK] return)
	When acquiring label sensor information	Commands are not accepted while acquiring sensor information. ([NAK] return)
	Error	The command can be received even if an error is occurring.

[Function]

Deleting the registered files.

[Format]

[DC2]DH,aa,b,c(,ddddd,eeeee)

[Parameters]

Symbol	Parameter name	Valid range	Acquisition method
a	Language	SB: SBPL settings SZ: SZPL settings SI: SIPL settings SD: SDPL settings ST: STCL settings	Two characters fixed acquisition
b	File type	0: Font/logo 1: TrueType font	One character fixed acquisition
c	Deletion type	0: File specification 1: All files	One character fixed acquisition
d	File name size (byte)	1 to 255	Acquire up to ","
e	File name *1 Only the file name is specified.	Data including the following character groups ▪ Alphabet ▪ Numeral ▪ Hyphen ("-") ▪ Underscore ("_") ▪ Period (".")	Acquired up to the file name size

[Return data format (normal)]

[ACK]<06>$_{16}$

[Return data format (when a command error occurs)]

[NAK]<15>$_{16}$

[Exception processing]

Parameter name	Exception condition	
	A value outside the range is specified	The specified size and received size are different
Language	Command error	Command error
File type	Command error	Command error
Deletion type	Command error	0: Command error 1: Invalid receive data*1
File name size	Command error	Command error
File name	Command error	

*1 Note that all data will be deleted even though subsequent data is not appropriate when specifying deleting all the files.

Terminology	Description
Command error	The file is not deleted. The data received after a command error is determined is not considered as a parameter of this command.
Invalid receive data	The subsequent data is ignored.

[Supplementary Explanation]

- Do not specify the parameter d and e when the parameter c specifies 1 (delete all files). When specified, the parameter d and e are not handled as data of this command.
- When a file name is bigger than the size of the file name and still the file name is valid, it operates and finishes normally.
- When you specify SZPL for "Parameter a: Language," "0: Font/logo," "1: TrueType font" settings of "Parameter b: File type" will be ignored. Beware that all files registered with SZPL will be deleted if you specify "1: All files" in "Parameter c: Deletion type."

[Sequence]

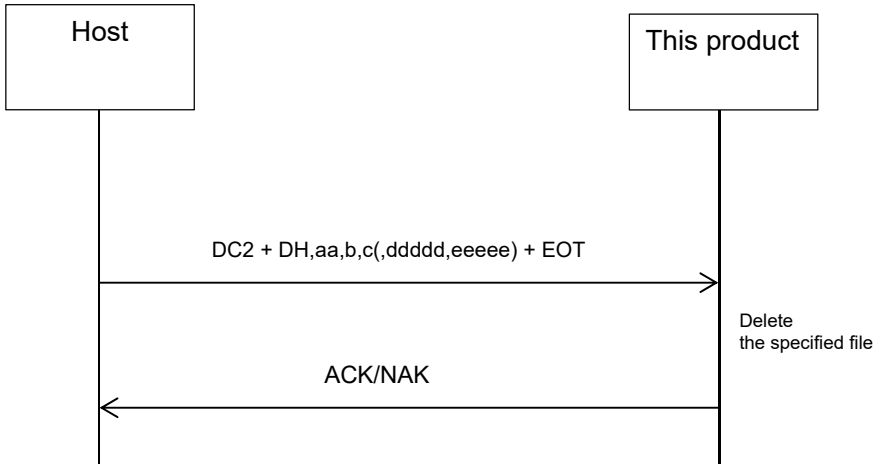

Time zone list

Time zone name	UTC offset	Cover area
Africa		
Africa/Addis Ababa	+03:00	Addis Ababa (Ethiopia)
Africa/Algiers	+01:00	Alger (Algeria)
Africa/Cairo	+02:00	Egypt
Africa/Cape Town	+02:00	South Africa
Africa/Casablanca	+01:00	Morocco
Africa/Khartoum	+02:00	Sudan
Africa/Lagos	+01:00	Nigeria
Africa/Tripoli	+02:00	Libya
Africa/Tunis	+01:00	Tunisia
Asia		
Asia/Baghdad	+03:00	Iraq
Asia/Bangkok	+07:00	Thai
Asia/Beirut	+02:00	Lebanon
Asia/Brunei	+08:00	Brunei
Asia/Calcutta	+05:30	India
Asia/Dhaka	+06:00	Bangladesh
Asia/Dubai	+04:00	Dubai
Asia/Hong Kong	+08:00	Hong Kong
Asia/Hovd	+07:00	Ubs, Khovd (Mongol)
Asia/Irkutsk	+08:00	Irkutsk Oblast (Russia)
Asia/Jakarta	+07:00	Java, Sumatra (Indonesia)
Asia/Jerusalem	+02:00	Israel
Asia/Kabul	+04:30	Afghanistan
Asia/Karachi	+05:00	Pakistan
Asia/Krasnoyarsk	+07:00	Krasnoyarsk (Russia)
Asia/Kuala Lumpur	+08:00	Malaysia
Asia/Kuwait	+03:00	Kuwait
Asia/Magadan	+11:00	Magadan (Russia), Chishima islands
Asia/Makassar	+08:00	Borneo, Sulawesi, Bali, Lesser Sunda, West Timor (Indonesian)
Asia/Manila	+08:00	Philippines
Asia/Novosibirsk	+07:00	Novosibirsk Novosibirsk Oblast (Russia)
Asia/Oral	+05:00	West Kazakhstan Province (Kazakhstan)
Asia/Phnom Penh	+07:00	Cambodia
Asia/Pontianak	+07:00	Borneo (Indonesia)
Asia/Rangoon	+06:30	Myanmar

Time zone name	UTC offset	Cover area
Asia/Riyadh	+03:00	Saudi Arabia
Asia/Saigon	+07:00	Vietnam
Asia/Seoul	+09:00	Korea
Asia/Shanghai	+08:00	Shanghai
Asia/Singapore	+08:00	Singapore
Asia/Taipei	+08:00	Taiwan
Asia/Tehran	+03:30	Iran
Asia/Tokyo	+09:00	Japan
Asia/Ulaanbaatar	+08:00	Mongol (excluding Ubs, Khovd and Bayan Ologey)
Asia/Vientiane	+07:00	Laos
Asia/Vladivostok	+10:00	Jewish Autonomous Oblast, Khabarovsk region, maritime region Central part of Sakha Republic (Russia)
Asia/Yakutsk	+09:00	Amurskaya oblast, Zabaykal'skiy Kray, East part of Sakha Republic (Russia)
Asia/Yekaterinburg	+05:00	Respublika Bashkortostan, Chelyabinsk Oblast, Khantia-Mansia, Kurgan Oblast, Orenburg Oblast, Perm Krai, Sverdlovsk Oblast, Tyumen Oblast, Yamalo-Nenets Autonomous Okrug (Russia)
Australia		
Australia/Adelaide	+09:30	South Australia
Australia/Brisbane	+10:00	Queensland (Australia)
Australia/Canberra	+10:00	New South Wales (Australia)
Australia/Darwin	+09:30	Darwin (Australia)
Australia/Eucla	+08:45	Eucla (Australia)
Australia/Hobart	+10:00	Hobart (Australia)
Australia/Melbourne	+10:00	Melbourne (Australia)
Australia/Perth	+08:00	Perth (Australia)
Australia/Sydney	+10:00	New South Wales (Australia)
Caribbean		
Caribbean/Havana	-05:00	Cuba
Caribbean/Kingston	-05:00	Jamaica
Caribbean/Nassau	-05:00	Bahamas
Caribbean/Port-au-Prince	-05:00	Haiti
Caribbean/San Juan	-04:00	San Juan (Argentina)
Caribbean/Santo Domingo	-04:00	Dominica
Central America		
Central America/Belmopan	-06:00	Belize
Central America/Guatemala	-06:00	Guatemala
Central America/Managua	-06:00	Nicaragua
Central America/Panama	-05:00	Panama
Central America/San Jose	-06:00	Costa Rica
Central America/San Salvador	-06:00	El Salvador

Time zone name	UTC offset	Cover area
Central America/Tegucigalpa	-06:00	Honduras
Europe		
Europe/Amsterdam	+01:00	Holland
Europe/Andorra	+01:00	Andorra
Europe/Astrakhan	+04:00	Astrakhan (Rissia)
Europe/Athens	+02:00	Greek
Europe/Belfast	+00:00	The United Kingdom
Europe/Belgrade	+01:00	Serbia
Europe/Berlin	+01:00	Germany
Europe/Bratislava	+01:00	Czech
Europe/Brussels	+01:00	Belgium
Europe/Bucharest	+02:00	Rumania
Europe/Budapest	+01:00	Hungary
Europe/Busingen	+01:00	Busingen (Germany)
Europe/Chisinau	+02:00	Moldova
Europe/Copenhagen	+01:00	Denmark
Europe/Dublin	+00:00	Ireland
Europe/Gibraltar	+01:00	Gibraltar (The United Kingdom)
Europe/Gothenburg	+01:00	Sweden
Europe/Guernsey	+00:00	The United Kingdom
Europe/Helsinki	+02:00	Finland
Europe/Isle Of Man	+00:00	The United Kingdom
Europe/Istanbul	+03:00	Turkey
Europe/Jersey	+00:00	The United Kingdom
Europe/Kaliningrad	+02:00	Kaliningrad (Russia)
Europe/Kiev	+02:00	Ukraine
Europe/Kirov	+03:00	Kirov (Russia)
Europe/Lisbon	+00:00	Portugal
Europe/Ljubljana	+01:00	Slovenia
Europe/London	+00:00	The United Kingdom
Europe/Luxembourg	+01:00	Luxembourg
Europe/Madrid	+01:00	Spain
Europe/Malta	+01:00	Malta
Europe/Mariehamn	+02:00	Finland
Europe/Minsk	+03:00	Belarus
Europe/Monaco	+01:00	Monaco
Europe/Moscow	+03:00	European Russia (Russia)
Europe/Nicosia	+02:00	Cyprus
Europe/Oslo	+01:00	Norway
Europe/Paris	+01:00	France
Europe/Podgorica	+01:00	Serbia

Time zone name	UTC offset	Cover area
Europe/Prague	+01:00	Czech
Europe/Reykjavik	+00:00	Iceland
Europe/Riga	+02:00	Latvia
Europe/Rome	+01:00	Italy
Europe/Samara	+04:00	Samara, Udmurtskaya (Russia)
Europe/San Marino	+01:00	Italy
Europe/Sarajevo	+01:00	Serbia
Europe/Saratov	+04:00	Saratov (Russia)
Europe/Simferopol	+03:00	Ukraine
Europe/Skopje	+01:00	Serbia
Europe/Sofia	+02:00	Bulgaria
Europe/Stockholm	+01:00	Sweden
Europe/Tallinn	+02:00	Estonia
Europe/Tirane	+01:00	Albania
Europe/Tiraspol	+02:00	Moldova
Europe/Torshavn	+00:00	Torshavn (Denmark)
Europe/Ulyanovsk	+04:00	Ulyanovsk (Russia)
Europe/Uzhgorod	+02:00	Ukraine
Europe/Vaduz	+01:00	Liechtenstein
Europe/Vatican	+01:00	Italy
Europe/Vienna	+01:00	Austria
Europe/Vilnius	+02:00	Lithuania
Europe/Volgograd	+03:00	Kirov, Saratov Volgograd Oblast, Astrakhan Oblast (Russia)
Europe/Warsaw	+01:00	Poland
Europe/Zagreb	+01:00	Serbia
Europe/Zaporozhye	+02:00	Ukraine
Europe/Zurich	+01:00	Swiss
North America		
North America/Alaska	-09:00	Alaska (America)
North America/Aleutian	-10:00	Aleutian Islands (America)
North America/Arizona	-07:00	Arizona (America)
North America/Central	-06:00	Canada, America, Mexico
North America/Danmarkshavn	+00:00	Greenland (Denmark)
North America/East-Indiana	-05:00	Indiana (America)
North America/Eastern	-05:00	Canada, America, Mexico
North America/Edmonton	-07:00	Alberta (Canada)
North America/Halifax	-04:00	Nova Scotia (Canada)
North America/Hawaii	-10:00	Hawaii (America)
North America/Indiana-Starke	-06:00	Stark county (America)
North America/Ittoqqortoormiit	-01:00	Ittoqqortoormiit (Denmark)

Time zone name	UTC offset	Cover area
North America/Mexico City	-06:00	Mexico
North America/Michigan	-05:00	Michigan (America)
North America/Montreal	-05:00	Quebec (Canada)
North America/Mountain	-07:00	Canada, America, Mexico
North America/Nuuk	-03:00	Nuuk (Denmark)
North America/Pacific	-08:00	Canada, America, Mexico
North America/Qaanaaq	-04:00	Qaanaaq (Denmark)
North America/Samoa	-11:00	Samoa
North America/St Johns	-03:30	Newfoundland, Labrador (Canada)
North America/Toronto	-05:00	Ontario (Canada)
North America/Vancouver	-08:00	British Columbia (Canada)
North America/Winnipeg	-06:00	Manitoba (Canada)
Pacific		
Pacific/Auckland	+12:00	New Zealand
Pacific/Port Moresby	+10:00	Papua New Guinea
South America		
South America/Asuncion	-04:00	Paraguay
South America/Bogota	-05:00	Colombia
South America/Buenos Aires	-03:00	Argentine
South America/Caracas	-04:00	Venezuela
South America/Guayaquil	-05:00	Ecuador
South America/La Paz	-04:00	Bolivia
South America/Lima	-05:00	Peru
South America/Manaus	-04:00	Amazon (Brazil)
South America/Montevideo	-03:00	Uruguay
South America/Port of Spain	-04:00	Trinidad, Tobago
South America/Santiago	-04:00	Chile
South America/Sao Paulo	-03:00	Brazil

Part 2 Interface Specification

Overview

Overview

This product has a build-in interface to communicate data with host and has an external signal interface to connect the product and peripheral devices.

Followings are the types of build-in interface.

- USB interface (USB2.0 High-speed, A type connector/B type connector)
- LAN interface (10BASE-T/100BASE-TX Auto switch, RJ-45 connector)
- RS-232C interface (DB9 pin (female))
- IEEE1284 interface (Communication mode: ECP/compatible, Amphenol 36 pin)
- External signal interface (Amphenol 14 pin)
- Bluetooth interface (Ver.3.0+EDR Class 2)
- NFC interface

In addition, following type of interface is available as option

- Wireless LAN (WLAN) unit (802.11a/b/g/n)

Combination of interface

Interfaces can be combined as described in the following chart.

		CONT PCB		KB-PCB		IF-PCB (COMBO)			Optional PCB
		USB	LAN	Bluetooth	NFC	RS-232C	IEEE1284	EXT	Wireless LAN
CONT PCB	USB		○	○	○	○	○	○	○
	LAN	○		○	○	○	○	○	△
KB-PCB	Bluetooth	○	○		○	○	○	○	○
	NFC	○	○	○		○	○	○	○
IF-PCB (COMBO)	RS-232C	○	○	○	○		○	○	○
	IEEE1284	○	○	○	○	○		○	○
	EXT	○	○	○	○	○	○		○
Optional PCB	Wireless LAN	○	△	○	○	○	○	○	

○: Configurable, △: Select

[Supplementary information]

- It is not possible to use LAN with WirelessLAN. It is possible to choose LAN or Wireless LAN from LCD screen. Please refer to [Switching LAN and WLAN] for details.
- Corresponding to the IEEE1284 high-speed IF board (COMBO). IF board is automatically recognized.

Communication Protocol

Types of Communication Protocol and Reception Mode

The available receive mode differs depending on the combination of interface and communication protocol.

However, the NFC communication protocol is limited to Multiple buffer mode only.

- Multiple receive mode

  Able to receive data up to reception buffer near full size during printing.
- Bi-directional communication (Status3, Status4, Status5)

  Monitors status of this product to carry out data communication.
- No bidirectional communication (READY/BUSY)

  Hardware controls data communication.
- Please refer to each interface for the detailed description of READY/BUSY, XON/XOFF , status3, status4, and status5.

Following chart shows available communication protocols.

	Interface		
Communication protocol	**LAN**	**Bluetooth**	**NFC**
Multiple buffer Without bidirectional communication	×	○	×
READY/BUSY Multiple buffer Without bidirectional communication	○	×	×
XON/XOFF Multiple buffer With bidirectional communication	○	×	×
Status3 Multiple buffer With bidirectional communication	○	×	×
Status4 Multiple buffer With bidirectional communication	○	○	○
Status5 Multiple buffer	○	○	○

	Interface		
Communication protocol	**LAN**	**Bluetooth**	**NFC**
With bidirectional communication			

	Interface			
Communication protocol	**LAN**	**Bluetooth**	**NFC**	**Wireless LAN (Optional)**
Multiple buffer Without bidirectional communication	×	×	○	×
READY/BUSY Multiple buffer Without bidirectional communication	×	×	×	×
XON/XOFF Multiple buffer With bidirectional communication	×	×	×	×
Status3 Multiple buffer With bidirectional communication	○	○	×	○
Status4 Multiple buffer With bidirectional communication	○	○	×	○
Status5 Multiple buffer With bidirectional communication	○	×	×	○

○: Enable, x: Disable

Return status

The purpose of return status is to manage the status of this product from the host, and this product returns the status by request command from host.

There are three types of return status format, Status3, Status4, and Status5. Each return status is listed below.

The product returns the status after receiving request command.

Communication protocol	Command	Command name
READY/BUSY	-	-
XON/XOFF	-	-
Status3	ENQ	Status request command
	CAN	Cancel request command
Status4	ENQ	Status request command
	CAN	Cancel request command
	DLE	Print end request command
	DC1	Print start request command
Status5	SOH + ENQ	Status request command
	SOH + CAN	Cancel request command
	SOH + DLE	Print end request command
	SOH + DC1	Print start request command

* In Status3, 4 , command is processed for ESC+ENQ and ESC+CAN and returns status, but does not process command nor returns status for ESC+DLE and ESC+DC1.

Remarks

When you acquire return status from this product, please input transmission interval time after sending each command to this product.

Command	Command name	Transmission interval time (Actual value)
ENQ (05H)	Status request	5 ms or more * 300 ms or more for Wireless LAN
CAN (18H)	Cancel request	500 ms or more
DLE (10H)	Print end request	
DC1 (11H)	Print start request	

ENQ (Status request)

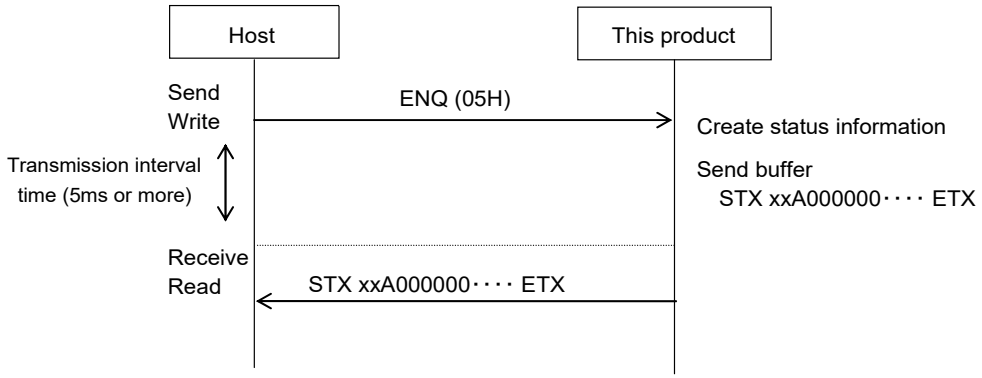

CAN (Cancel request)

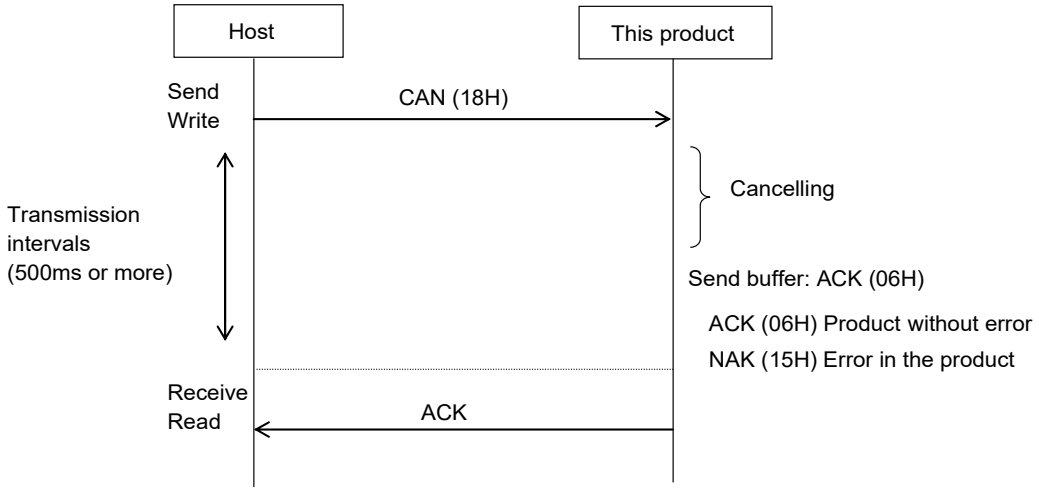

The values stated above are target values for queuing time until host reads ACK from this product. It varies by the interface type or settings, and network environment, etc.

The rough standard for transmission interval shall be 900 ms or more when you request cancel (18H) when receive buffer is near full.

Return Status of Status3

The purpose of this communication protocol is to return this product condition and reply as a status to the host by receiving three types of request commands and print command.

Following described about the details of request commands and return status.

Status Request Command

This command returns the Job ID number of received data in printing, status of this product and the number of remaining label to Process print to the host. All "0" (HEX 30H) is returned for print quality when the print is completed or when there is no received data. Space (HEX 20H) is returned for the Job ID numbers when command for the designation of the job ID number <ID> is not specified.

Please do not send ENQ (Status request) while sending print data (STX <A> to <Z> ETX). Status would not be returned properly or print would not be performed properly if ENQ is sent.

1. Command ENQ (HEX 05H)
   STX (HEX 02H)
   ETX (HEX 03H)
2. Return status, Format (Port1, Port2, or when Legacy Status setting for Port3 is invalid)

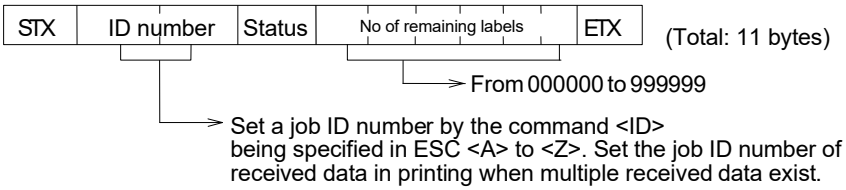

When Legacy Status setting for Port 3 is valid

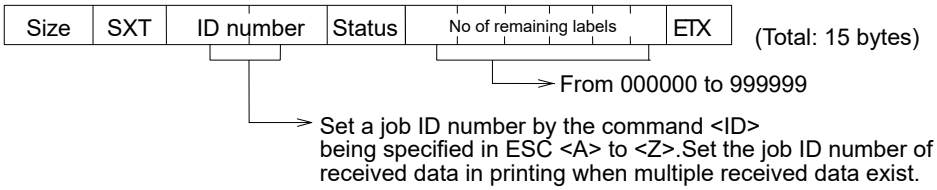

3. Status list

Contents			ASCII	HEX
OFFLINE STATE	NO ERROR		0	30
	RIBBON / LABEL NEAR END		1	31
	BUFFER NEAR FULL		2	32
	RIBBON / LABEL NEAR END & BUFFER NEAR FULL		3	33
	(UNUSED) BATTERY NEAR END		5	35
	(UNUSED) BATTERY NEAR END & RIBBON / LABEL NEAR END		6	36
	(UNUSED) BATTERY NEAR END & BUFFER NEAR FULL		7	37
	(UNUSED) BATTERY NEAR END & RIBBON / LABEL NEAR END & BUFFER NEAR FULL		8	38
ONLINE STATE	WAIT TO RECEIVE	NO ERROR	A	41
		RIBBON / LABEL NEAR END	B	42
		BUFFER NEAR FULL	C	43

Contents			ASCII	HEX
		RIBBON / LABEL NEAR END & BUFFER NEAR FULL	D	44
		(UNUSED) BATTERY NEAR END	!	21
		(UNUSED) BATTERY NEAR END & RIBBON / LABEL NEAR END	“	22
		(UNUSED) BATTERY NEAR END & BUFFER NEAR FULL	#	23
		(UNUSED) BATTERY NEAR END & RIBBON / LABEL NEAR END & BUFFER NEAR FULL	$	24
	PRINTING	NO ERROR	G	47
		RIBBON / LABEL NEAR END	H	48
		BUFFER NEAR FULL	I	49
		RIBBON / LABEL NEAR END & BUFFER NEAR FULL	J	4A
		(UNUSED) BATTERY NEAR END	%	25
		(UNUSED) BATTERY NEAR END & RIBBON / LABEL NEAR END	&	26
		(UNUSED) BATTERY NEAR END & BUFFER NEAR FULL	‘	27
		(UNUSED) BATTERY NEAR END & RIBBON / LABEL NEAR END & BUFFER NEAR FULL	(	28
	STANDBY (Waiting for dispenser/ cutter)	NO ERROR	M	4D
		RIBBON / LABEL NEAR END	N	4E
		BUFFER NEAR FULL	O	4F
		RIBBON / LABEL NEAR END & BUFFER NEAR FULL	P	50
		(UNUSED) BATTERY NEAR END	)	29
		(UNUSED) BATTERY NEAR END & RIBBON / LABEL NEAR END	*	2A
		(UNUSED) BATTERY NEAR END & BUFFER NEAR FULL	+	2B
		(UNUSED) BATTERY NEAR END & RIBBON / LABEL NEAR END & BUFFER NEAR FULL	,	2C
	ANALYZING / EDITING	NO ERROR[*1]	S	53
		RIBBON / LABEL NEAR END[*1]	T	54
		BUFFER NEAR FULL[*1]	U	55
		RIBBON / LABEL NEAR END & BUFFER NEAR FULL[*1]	V	56
		(UNUSED) BATTERY NEAR END [*1]	-	2D
		(UNUSED) BATTERY NEAR END & RIBBON / LABEL NEAR END	.	2E
		(UNUSED) BATTERY NEAR END & BUFFER NEAR FULL	/	2F
		(UNUSED) BATTERY NEAR END & RIBBON / LABEL NEAR END & BUFFER NEAR FULL	@	40
ERROR DETECTION	BUFFER OVER [*2]		a	61

Contents		ASCII	HEX
	HEAD OPEN	b	62
	PAPER END	c	63
	RIBBON END	d	64
	MEDIA ERROR (PRINT ERROR)	e	65
	SENSOR ERROR / PAPER JAM ERROR	f	66
	BARCODE READ/COLLATION ERROR	f	66
	BARCODE READER CONNECTION CONFIRMATION ERROR	f	66
	HEAD ERROR	g	67
	(UNUSED) COVER OPEN	h	68
	CUTTER OPEN ERROR	h	68
	(UNUSED) RIBBON CORE NON LOCK ERROR	h	68
	CARD ERROR	i	69
	CUTTER ERROR	j	6A
	OTHER ERRORS	k	6B
	(UNUSED) CUTTER SENSOR ERROR	l	6C
	(UNUSED) STACKER OR REWINDER FULL WINDER FULL	m	6D
	RFID TAG ERROR	o	6F
	RFID PROTECT ERROR	p	70
	(UNUSED) BATTERY ERROR	q	71

*1 Print quantity may not be set properly depending on timing of edit and analysis.

*2 BUFFER OVER may occur or may not occur, it depends on interface.

RS-232C: BUFFER OVER may occur.

USB, LAN, WLAN, Bluetooth, IEEE1284: BUFFER OVER may not occur.

Cancel Request Command

This command enables to cancel print jobs and to clear the entire contents of receive buffer.

The status of this product after finishing process is returned.

* When the cancel request command has been sent, wait more than 500 ms before sending the next data.

* This command shall not be used while sending other data like print data.

1. Command CAN (HEX 18H)
2. Return status list

Return status	Contents
ACK (HEX 06H)	No error in this product
NAK (HEX 15H)	Error in this product

Print Command

Print starts after receiving print command (STX <A> to <Z> ETX).

The status of this product after receiving command is returned.

1. Return status list (The status of this product)

   RS-232C or Bluetooth interface

Return status	Contents
ACK (HEX 06H)	No error in this product
NAK (HEX 15H)	Error in this product

* In Ver1.8.0 and after, ACK is returned during Sleep and WakeUp.

* If ESC+Z is received and error occurs at the same time when this product wakes up from Sleep mode, there is a timing to return ACK. But, this rarely occurs in operation because status is checked by ENQ.

Interface other than RS-232C and Bluetooth

Return status	Contents
None	No response is returned.

Command example of Job ID number <ID>

```
<A>
<ID>01
<V>100<H>100<P>2<L>0202<X20>,ABC
<Q>1
<Z>
```

Please refer to "Job ID Number <ID>" in this document for details.

Return Status of Status4

The purpose of this communication protocol is to return this product condition and reply as a status to the host by receiving four types of request commands and print command.

Following described about the details of request commands and return status.

Status Request Command

This command returns the Job ID number of received data in printing, status of this product and the number of remaining label to Process print to , the host. All "0" (HEX 30H) is returned for print quality when the print is completed or when there is no received data. Space (HEX 20H) is returned for the Job ID numbers when command for the designation of the job ID number <ID> is not specified.

Please do not send ENQ (Status request) while sending print data (STX <A> to <Z> ETX). Status would not be returned properly or print would not be performed properly if ENQ is sent.

1. Command ENQ (HEX 05H)
2. Return status, Format

LAN, Wireless LAN
36 bytes
Legacy Status
Setting is enabled

Number of bytes to send 4 bytes 00000020H	Number of bytes to send 4 bytes 0000001CH	ENQ 1 byte 05H	STX 1 byte 02H	ID number 2 bytes	Status 1 byte	Remaining number of label 6 bytes	JOB name 16 bytes	ETX 1 byte 03H

Number of bytes to send 4 bytes 0000001CH	ENQ 1 byte 05H	STX 1 byte 02H	ID number 2 bytes	Status 1 byte	Remaining number of label 6 bytes	JOB name 16 bytes	ETX 1 byte 03H

LAN, Wireless LAN
32 bytes
Legacy Status for
Port9100 Disable.

ID number is set after it is specified by the Job ID number command.

From 000000 to 999999

Job name is set after it is specified by job name command.

STX 1 byte 02H	ID number 2 bytes	Status 1 byte	Remaining number of label 6 bytes	JOB name 16 bytes	ETX 1 byte 03H

Other interface
than above
27 bytes

3. Return status list

Contents		ASCII	HEX
OFFLINE STATE	NO ERROR	0	30
	RIBBON / LABEL NEAR END	1	31
	BUFFER NEAR FULL	2	32
	RIBBON / LABEL NEAR END & BUFFER NEAR FULL	3	33
	PRINT HALT (NO ERROR)	4	34
	(UNUSED) BATTERY NEAR END	5	35
	(UNUSED) BATTERY NEAR END & RIBBON / LABEL NEAR END	6	36
	(UNUSED) BATTERY NEAR END & BUFFER NEAR FULL	7	37
	(UNUSED) BATTERY NEAR END & RIBBON / LABEL NEAR END & BUFFER NEAR FULL	8	38

Contents			ASCII	HEX
ONLINE STATE	WAIT TO RECEIVE	NO ERROR	A	41
		RIBBON / LABEL NEAR END	B	42
		BUFFER NEAR FULL	C	43
		RIBBON / LABEL NEAR END & BUFFER NEAR FULL	D	44
		PRINT HALT (NO ERROR)	E	45
		(UNUSED) BATTERY NEAR END	!	21
		(UNUSED) BATTERY NEAR END & RIBBON / LABEL NEAR END	“	22
		(UNUSED) BATTERY NEAR END & BUFFER NEAR FULL	#	23
		(UNUSED) BATTERY NEAR END & RIBBON / LABEL NEAR END & BUFFER NEAR FULL	$	24
	PRINTING	NO ERROR	G	47
		RIBBON / LABEL NEAR END	H	48
		BUFFER NEAR FULL	I	49
		RIBBON / LABEL NEAR END & BUFFER NEAR FULL	J	4A
		PRINT HALT (NO ERROR)	K	4B
		(UNUSED) BATTERY NEAR END	%	25
		(UNUSED) BATTERY NEAR END & RIBBON / LABEL NEAR END	&	26
		(UNUSED) BATTERY NEAR END & BUFFER NEAR FULL	‘	27
		(UNUSED) BATTERY NEAR END & RIBBON / LABEL NEAR END & BUFFER NEAR FULL	(	28
	STANDBY (Waiting for dispenser/ cutter)	NO ERROR	M	4D
		RIBBON / LABEL NEAR END	N	4E
		BUFFER NEAR FULL	O	4F
		RIBBON / LABEL NEAR END & BUFFER NEAR FULL	P	50
		PRINT HALT (NO ERROR)	Q	51
		(UNUSED) BATTERY NEAR END	)	29
		(UNUSED) BATTERY NEAR END & RIBBON / LABEL NEAR END	*	2A
		(UNUSED) BATTERY NEAR END & BUFFER NEAR FULL	+	2B
		(UNUSED) BATTERY NEAR END & RIBBON / LABEL NEAR END & BUFFER NEAR FULL	,	2C
	ANALYZING / EDITING	NO ERROR[*1]	S	53
		RIBBON / LABEL NEAR END[*1]	T	54
		BUFFER NEAR FULL[*1]	U	55

Contents			ASCII	HEX
		RIBBON / LABEL NEAR END & BUFFER NEAR FULL*1	V	56
		PRINT HALT (NO ERROR)*1	W	57
		(UNUSED) BATTERY NEAR END	-	2D
		(UNUSED) BATTERY NEAR END & RIBBON / LABEL NEAR END	.	2E
		(UNUSED) BATTERY NEAR END & BUFFER NEAR FULL	/	2F
		(UNUSED) BATTERY NEAR END & RIBBON / LABEL NEAR END & BUFFER NEAR FULL	@	40
ERROR DETECTION	HEAD OPEN		b	62
	PAPER END		c	63
	RIBBON END		d	64
	MEDIA ERROR (PRINT ERROR)		e	65
	SENSOR ERROR / PAPER JAM ERROR		f	66
	BARCODE READ/COLLATION ERROR		f	66
	BARCODE READER CONNECTION CHECK ERROR		f	66
	HEAD ERROR		g	67
	(UNUSED) COVER OPEN		h	68
	CUTTER OPEN ERROR		h	68
	(UNUSED) RIBBON CORE NON LOCK ERROR		h	68
	CARD ERROR		i	69
	CUTTER ERROR		j	6A
	OTHER ERRORS		k	6B
	(UNUSED) CUTTER SENSOR ERROR		l	6C
	(UNUSED) STACKER OR REWINDER FULL WINDER FULL		m	6D
	RFID TAG ERROR		o	6F
	RFID PROTECT ERROR		p	70
	(UNUSED) BATTERY ERROR		q	71

*1 Print quantity may not be set properly depending on timing of edit and analysis.

*1 BUFFER OVER may occur or may not occur, it depends on interface.

RS-232C: BUFFER OVER may occur.

LAN, IEEE1284: BUFFER OVER may not occur.

Contributing factor to receive buffer near full

"Receive buffer near full" occurs when the buffer's free space goes down to 0.95 MB out of the 2.95 MB of receive buffer.

Contributing factor to cancellation of receive buffer near full

"Receive buffer near full" is cleared when the buffer's free space increased to 1.95 MB.

Cancel Request Command

This command enables to cancel print jobs and to clear the entire contents of receive buffer.

The status of this product after finishing process is returned.

* When the cancel request command has been sent, wait more than 500 ms before sending the next data.

* Please do not send CAN (Cancel request command) while STX <A> to <Z> ETX. CAN (Cancel request command) would not be sent properly.

1. Command CAN (HEX 18H)
2. Return status list

Return Status	Contents
ACK (HEX 06H)	No error in this product
NAK (HEX 15H)	Error in this product

* ACK is HEX 0000000106H and NAK is HEX 0000000115H for LAN/Wireless LAN interface. On the condition that Legacy status is enabled.

Print Command

This command (<A> to <Z>) starts the printing process.

The status of this product after receiving command is returned.

1. Return status list

RS-232C or Bluetooth interface

Return Status	Contents
ACK (HEX 06H)	No error in this product
NAK (HEX 15H)	Error in this product

* In Ver1.6.4 and after, ACK is returned during Sleep and WakeUp.

Other than RS-232C and Bluetooth interface

Return Status	Contents
None	No response is returned.

Print End Request Command

This command halts the printing process.

The status of this product after receiving command is returned.

1. Command DLE (HEX 10H)
2. Return status list

Return status	Contents
ACK (HEX 06H)	No error in this product
NAK (HEX 15H)	Error in this product

* ACK is HEX 0000000106H and NAK is HEX 0000000115H for LAN/Wireless LAN interface.

Please do not send DLE (Print stop request command) while STX <A> to <Z> ETX. DLE (Print stop request command) would not be sent properly. Font data, graphic data, barcode data will not be processed as DLE transmission (Print stop request).

Print Start Request Command

This command releases the pause mode of this product and restarts the printing process.

The status of this product after receiving command is returned.

1. Command DC1 (HEX 11H)
2. Return status list

Return status	Contents
ACK (HEX 06H)	No error in this product
NAK (HEX 15H)	Error in this product

* ACK is HEX 0000000106H and NAK is HEX 0000000115H for LAN/Wireless LAN interface.

Return Status of Status5

The following is functionality provided by this communication protocol.

Data Transmission Format

1. All control commands like print data, status request, cancel request are specified by adding STX (HEX 02H) and (HEX 03H).

   * It is not necessary to add STX (HEX 02H) and ETX (HEX 03H) for setting data.

2. Item No. must be added to print data.
3. BCC must be added at the end of item end (<Z>) when BCC check functionality is set to enabled. BCC is not necessary for obtaining information like status request etc.

   Use example)

   - Print data

STX	<A>	Print data	<Z>	BCC	ETX

   - Status request

STX	SOH	ENQ	00000	ETX

Item Status Obtaining Command

This command searches for the specified item number from the end of history buffer and returns the status of target item to host.

[Command]

SOH(HEX 01H) + ENQ(HEX 05H)

[Format]

STX + SOH + ENQ + aaaaa + ETX

- Parameter

  a [Item No.] Valid range : 00000 to 99999
  *****

1. Parameter must be 5 digits.
2. Parameter [*] is [HEX 2AH].
3. Use item No. to be compatible with previous printers. Ignore Item No.

   Always returns the status of final item.

[Return status format] (Legacy Status setting is valid with LAN/Wireless LAN, Other I/F)

[1]	[5]	[2]	[5]	[2]	[6]	[1]
STX	Specified item No. *1	Final item status *1	Processing item No.	Processing item status *2	Number of label for processing item	ETX

STX(HEX 02H) ETX(HEX 03H)

[Return status format] (Legacy Status setting is valid with LAN/Wireless LAN)

[4] Size	[1] STX	[5] Specified item No. *1	[2] Final item status *1	[5] Processing item No.	[2] Processing item status *2	[6] Number of label for processing item	[1] ETX

STX(HEX 02H) ETX(HEX 03H)

Numerical number in [ ] indicates the number of bytes in use. Total 22 bytes of return status format (Fix). Header of four bytes is added before return status when Legacy Status for Port9100 is valid and Port3 is used.

Item No. is filled by “0.”

processing item No. will become space (20H) after printing is completed.

*1 Specified item No. is ***** (0x2A2A2A2A2A) and final item status is ** (0x2A2A) fix.

*2 The first digit shows the status of processing item and the second digit shows the error. The following is the chart showing status of processing items.

Digit	Contents	ASCII	HEX
1	Offline	0	30
	Online - Wait for receiving	1	31
	Online - Printing	2	32
	Online - Waiting (Wait for dispense)	3	33
	Online - Analyzing / Editing * [Number of processing item to be printed] may not be set, which is depending on the timing.	4	34
	Error	5	35
	Stop printing (Receiving DLE command)	6	36

Digit	Contents	ASCII	HEX
2	NO ERROR	0	30
	RIBBON NEAR END	1	31
	BUFFER NEAR FULL	2	32
	RIBBON NEAR END & BUFFER NEAR FULL	3	33
	LABEL NEAR END	4	34
	LABEL NEAR END & RIBBON NEAR END	5	35
	LABEL NEAR END & BUFFER NEAR FULL	6	36
	LABLE NEAR END & RIBBON NEAR END & BUFFER NEAR FULL	7	37
	MACHINE ERROR	A	41
	FLASH ROM ERROR	B	42
	HEAD OPEN	C	43
	PAPER END	D	44
	RIBBON END	E	45
	SENSOR ERROR / PAPER JAM ERROR	F	46

Digit	Contents	ASCII	HEX
	HEAD ERROR	G	47
	MEMORY READ/WRITE ERROR (CARTRIDGE READ/WRITE ERROR)	H	48
	MEMORY FULL (CARTRIDGE FULL)	I	49
	CUTTER ERROR	J	4A
	CALENDAR ERROR	K	4B
	(UNUSED) KANJI DATA ERROR (KANJI ROM EORROR)	L	4C
	(UNUSED) INTERNAL REWINDER FULL	M	4D
	CUTTER BRACKET OPEN ERROR	N	4E
	RFID TAG ERROR	O	4F
	RFID PROTECT ERROR	P	50
	BCC ERROR	Q	51
	(UNUSED) ITEM NO. ERROR	R	52
	MEDIA ERROR (PRINT ERROR)	S	53
	(UNUSED) RIBBON WINDING NON LOCK ERROR	T	54
	OTHER ERRORS	U	55
	(UNUSED) COVER OPEN	V	56
	BARCODE READ/COLLATION ERROR	V	56
	BARCODE READER CONNECTION CHECK ERROR	W	57

[Example]

STX SOH ENQ 00001 ETX

STX SOH ENQ ***** ETX

[Supplementary Explanation]

- This command shall not be used while sending other data like print data. Status would not be returned properly or print would not be performed properly if this command is sent while sending print data.
- This product returns the current status returns after receiving this command.

BCC Check Function

BCC (Block Check Code) is 1 byte of data calculated XOR of 1 send data (<A>-<Z>). BCC shall be added to the end of data (<Z>) per item for host to send data to this product.

This product checks the validity of receiving data by calculating BCC per data item being received and compares it with sent BCC. When those BCC are different, this product judges that receiving data is incorrect and causes [BCC error] before printing the item then stops printing operation.

The LCD display of the item No. error

Press right soft key	Resume printing from print data with BCC error.
Send SUB command	Resume printing where it left off after canceling BCC error. This commands able to specify whether to print data with error or cancel the data.

Press left soft key	Cancel all print data then resume printing from the next item.

The following is the cancellation method of BCC error.

Calculation range of BCC)

- Print data

STX	<A>	<ID>00001	Print data	<Z>	BCC	ETX

Calculation range of BCC

[Supplementary Explanation]

- Print data is only target for BCC check. Error will not be detected for error which does not require printing operation like registration data or printer setting command etc.
- Add only data, which starts from data transmission start <A> and ends at data transmission <Z> for BCC.
- BCC calculates exclusive OR for data in the calculation range.

Cancel Request Command

This commands cancel all items.

[Command]

SOH(HEX 01H) + CAN(HEX 18H)

[Format]

STX + SOH + CAN + aaaaa + ETX

- Parameter

  a [Item No.] Valid range : 00000 to 99999
  *****

  - Parameter must be 5 digits.
  - Parameter [*] is [HEX 2AH].
  - Cancel all items regardless of Item No.

[Example]

STX SOH CAN 00001 ETX

STX SOH CAN ***** ETX

[Supplementary Explanation]

- This command shall not be used while sending other data like print data.
- Please note that there is no return data for this command. Host will send item acquiring command (SOH+ENQ) so please check the result by checking the return status.

Print End Request Command

This command stops printing operation.

[Command]

SOH(HEX 01H) + DLE(HEX 10H)

[Format]

STX + SOH + DLE + ETX

[Example]

STX SOH DLE ETX

[Supplementary Explanation]

- This command shall not be used while sending other data like print data.
- Please note that there is no return data for this command. Host will send item acquiring command (SOH+ENQ) so please check the result by checking the return status.

Print Start Request Command

This command cancels print operation in hold, which was stopped by print stop command (SOH +DLE), then resume printing operation.

[Command]

SOH(HEX 01H) + DC1(HEX 11H)

[Format]

STX + SOH + DC1 + ETX

[Example]

STX SOH DC1 ETX

[Supplementary Explanation]

- This command shall not be used while sending other data like print data.
- Please note that there is no return data for this command. Host will send item acquiring command (SOH+ENQ) so please check the result by checking the return status.

Status5 Return Error Cancellation Request Command

This command cancels Item No. error or BCC error and resume printing operation from the item with error.

[Command]

SOH(HEX 01H) + SUB(HEX 1AH)

[Format]

STX + SOH + SUB + a + ETX

a [Cancel]
0 : Cancel error data
1 : Print error data

[Example]

STX SOH SUB 0 ETX

[Supplementary Explanation]

- Do not include this command to print data (<A>-<Z>).

- Please note that there is no return data for this command. Host will send item acquiring command (SOH+ENQ) so please check the result by checking the return status.

READY/BUSY

This communication protocol controls the reception of print data by the control of hard signal only. Refer to RS-232C for the details.

XON/XOFF

This communication protocol communicates with the host to see if this product is ready to receive data by sending "XON" (HEX 11H) or "XOFF" (HEX 13H) codes to signal line.

Refer to RS-232C for the details.

Status3

The purpose of this communication protocol is to control the status of this product on host and to return status from this product with request command from host.

Please refer to "Return status of Status3" for the details of request command and return status.

Return Sequence

When LAN/Wireless LAN interface is used, please refer to "Printer Status" in “LAN/Wireless LAN” described below.

Normal

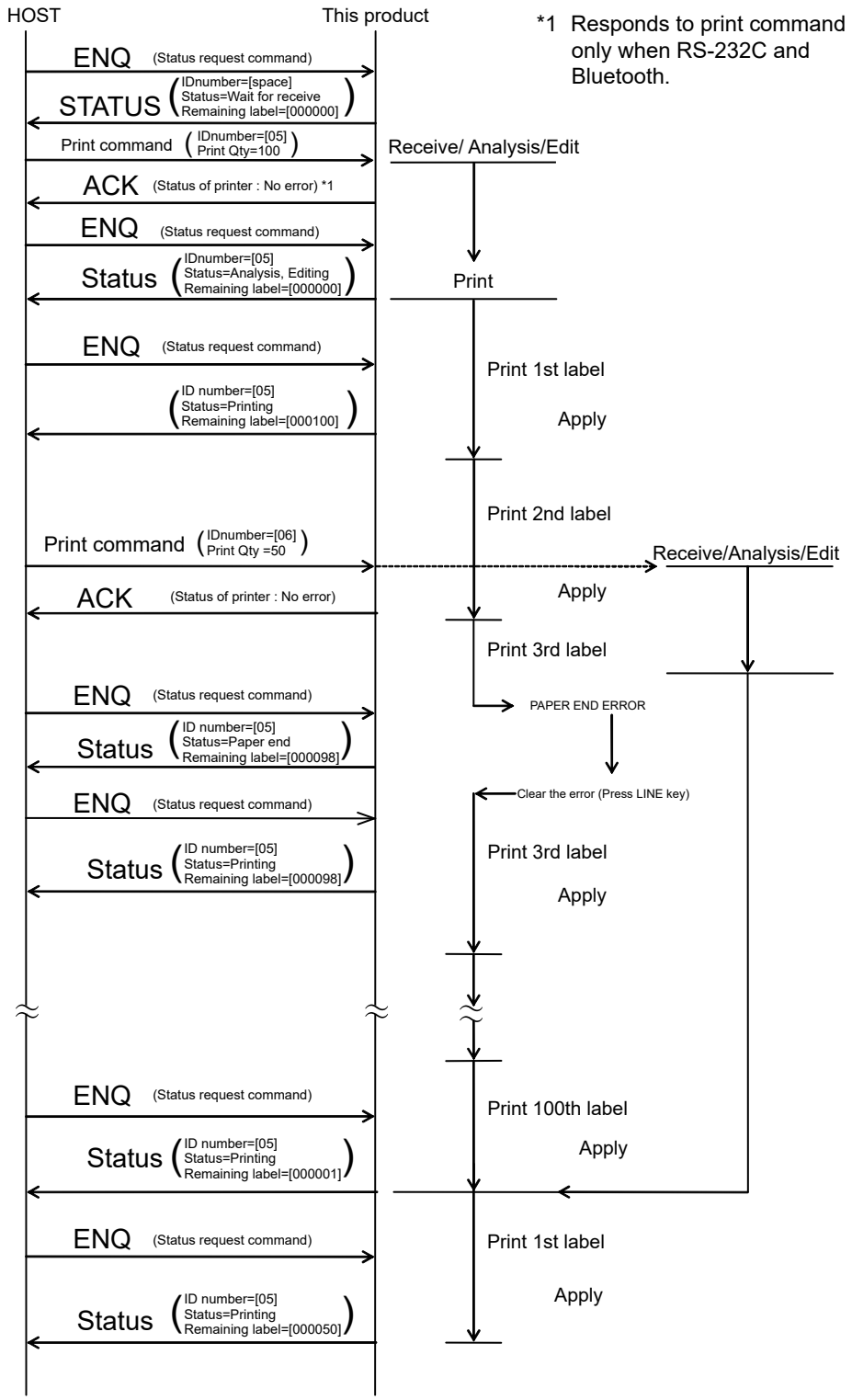
HOST
This product
*1 Responds to print command only when RS-232C and Bluetooth.
ENQ (Status request command)
STATUS (IDnumber=[space] Status=Wait for receive Remaining label=[000000])
Print command (IDnumber=[05] Print Qty=100)
Receive/ Analysis/Edit
ACK (Status of printer : No error) *1
ENQ (Status request command)
Status (IDnumber=[05] Status=Analysis, Editing Remaining label=[000000])
Print
ENQ (Status request command)
Print 1st label
(ID number=[05] Status=Printing Remaining label=[000100])
Apply
Print 2nd label
Print command (IDnumber=[06] Print Qty =50)
Receive/Analysis/Edit
ACK (Status of printer : No error)
Apply
Print 3rd label
ENQ (Status request command)
PAPER END ERROR
Status (ID number=[05] Status=Paper end Remaining label=[000098])
Clear the error (Press LINE key)
ENQ (Status request command)
Print 3rd label
Status (ID number=[05] Status=Printing Remaining label=[000098])
Apply
ENQ (Status request command)
Print 100th label
Status (ID number=[05] Status=Printing Remaining label=[000001])
Apply
ENQ (Status request command)
Print 1st label
Apply
Status (ID number=[05] Status=Printing Remaining label=[000050])

Cancel Request Command

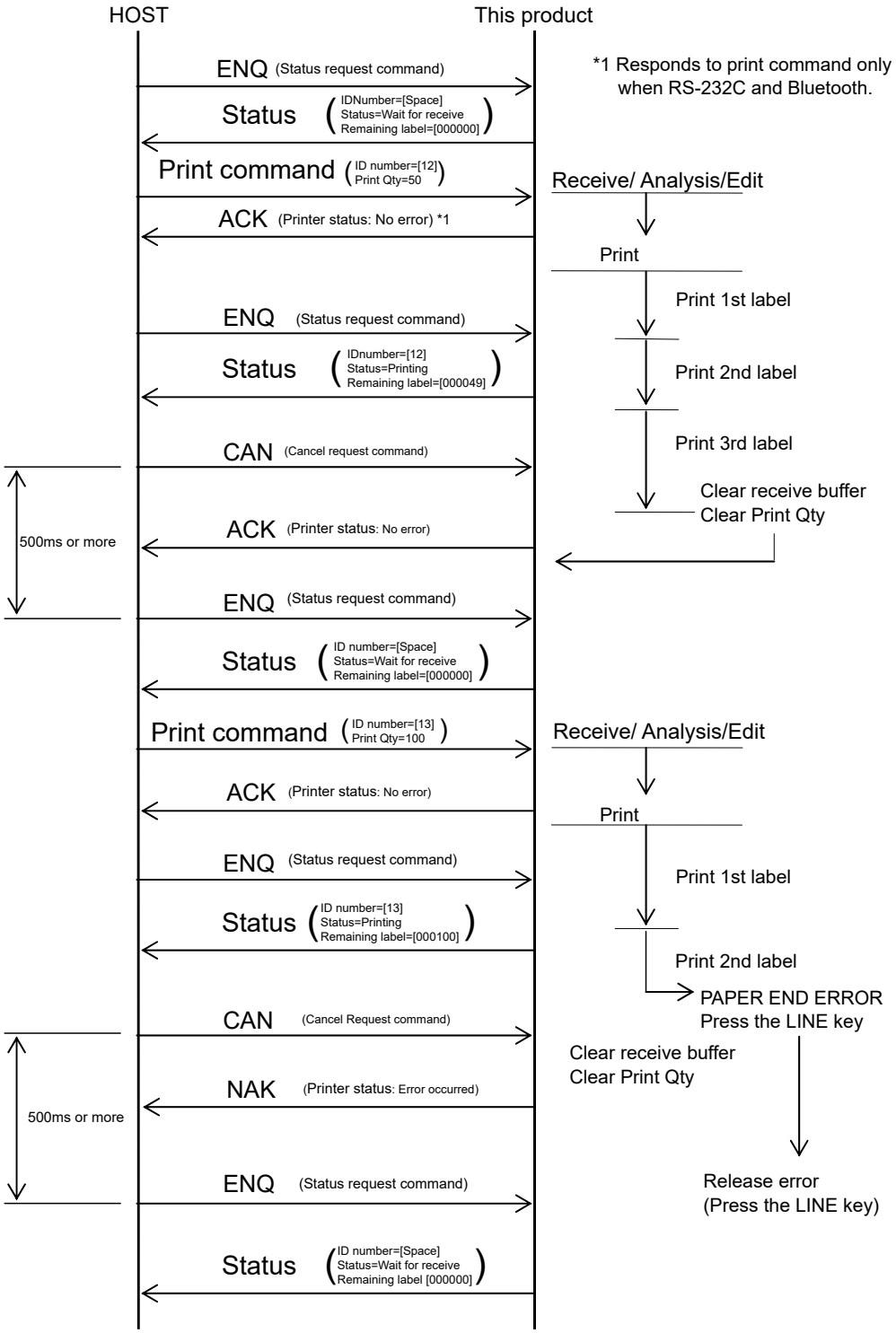

Reference flow chart

Please refer to the following flow chart for creating program at host with this protocol.

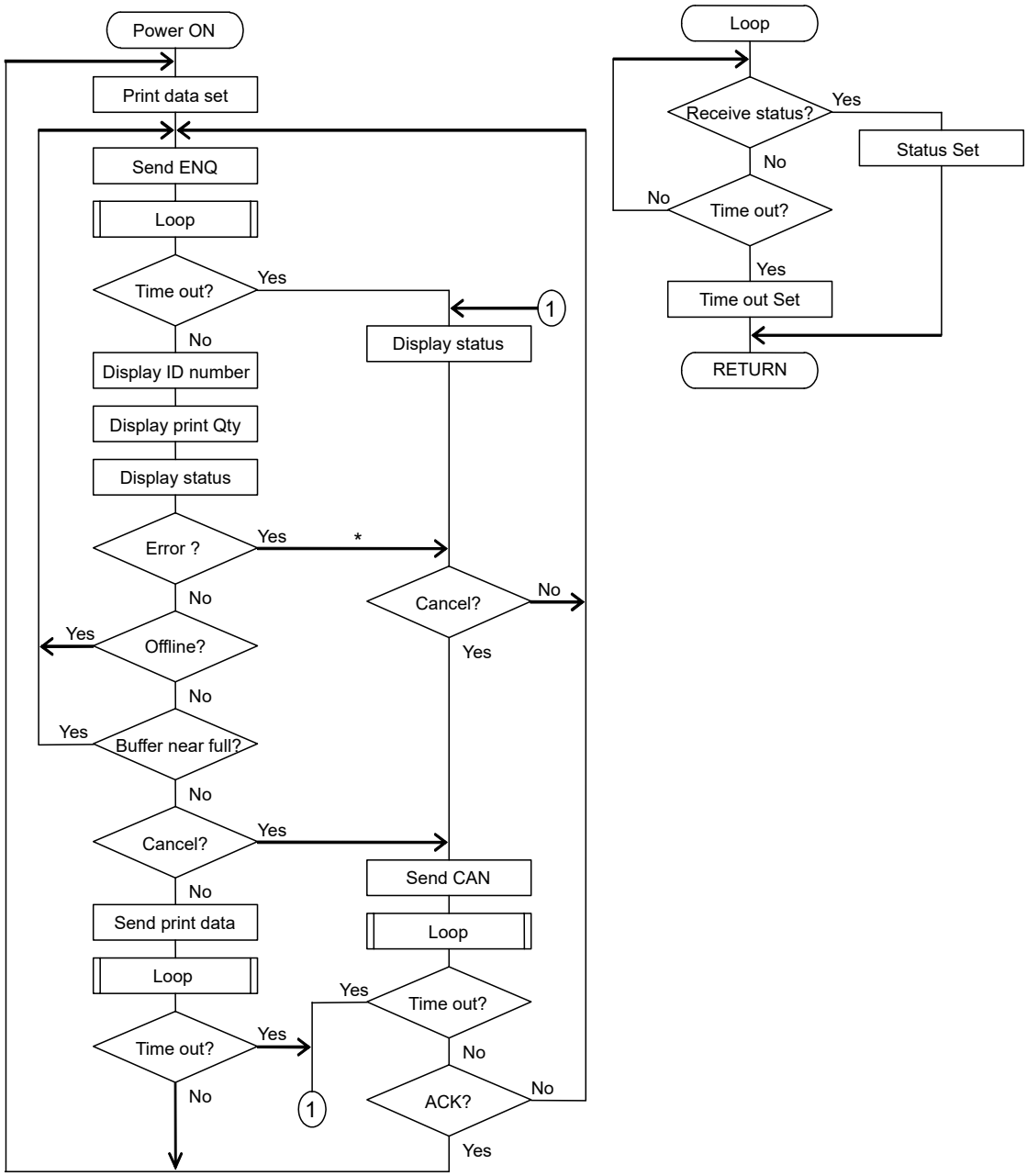

* Please make sure that error in this product has been cleared by ENQ then send print data when this product detects an error by checking status.

Status4

The purpose of this communication protocol is to control the status of this product on host and to return status from this product with request command from host.

Please refer to "Return status of Status4” for the details of request command and return status.

Return Sequence

When LAN/Wireless LAN interface is used, please refer to "Printer Status" in “LAN/Wireless LAN” described below.

Normal Process

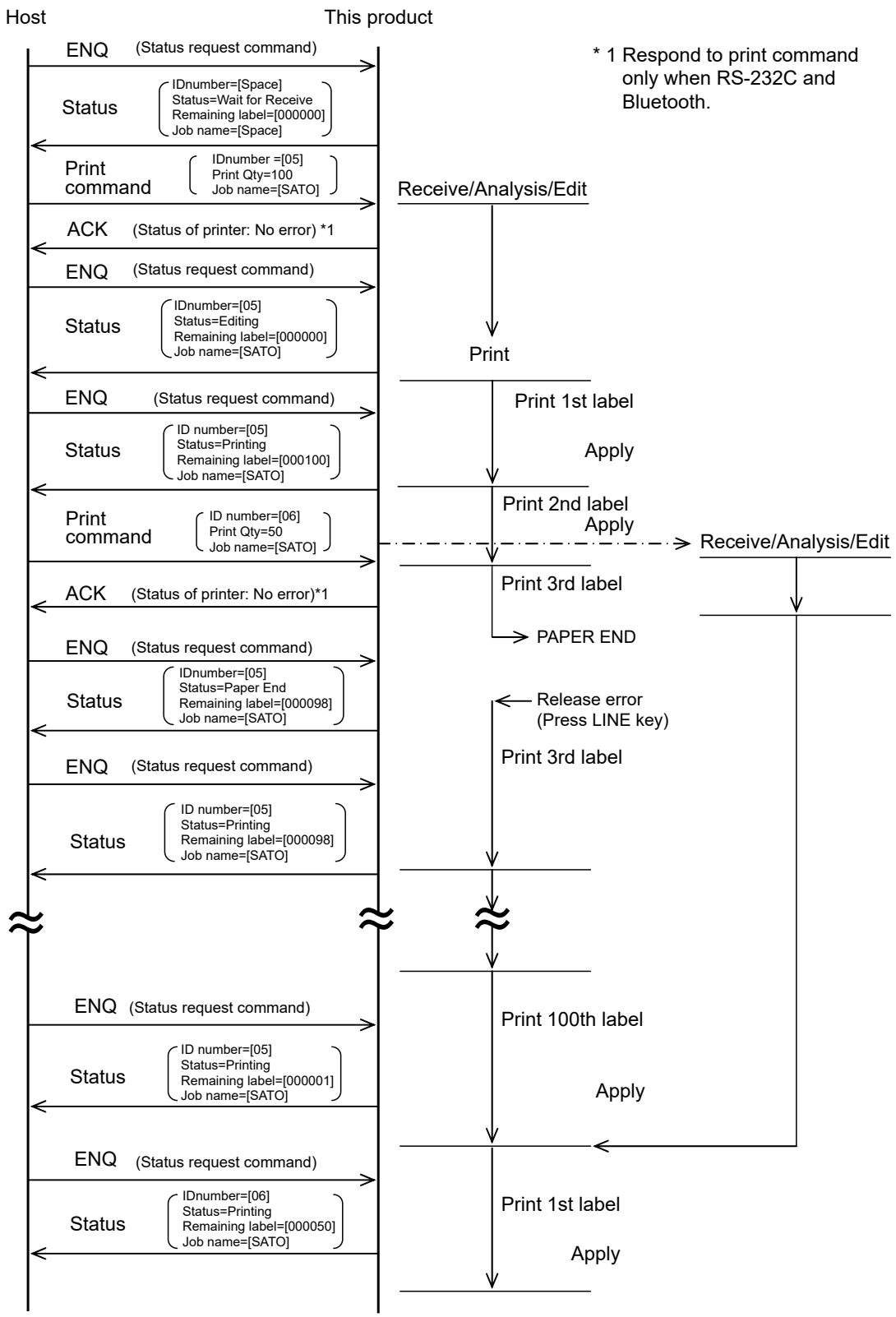

Cancel Request Command

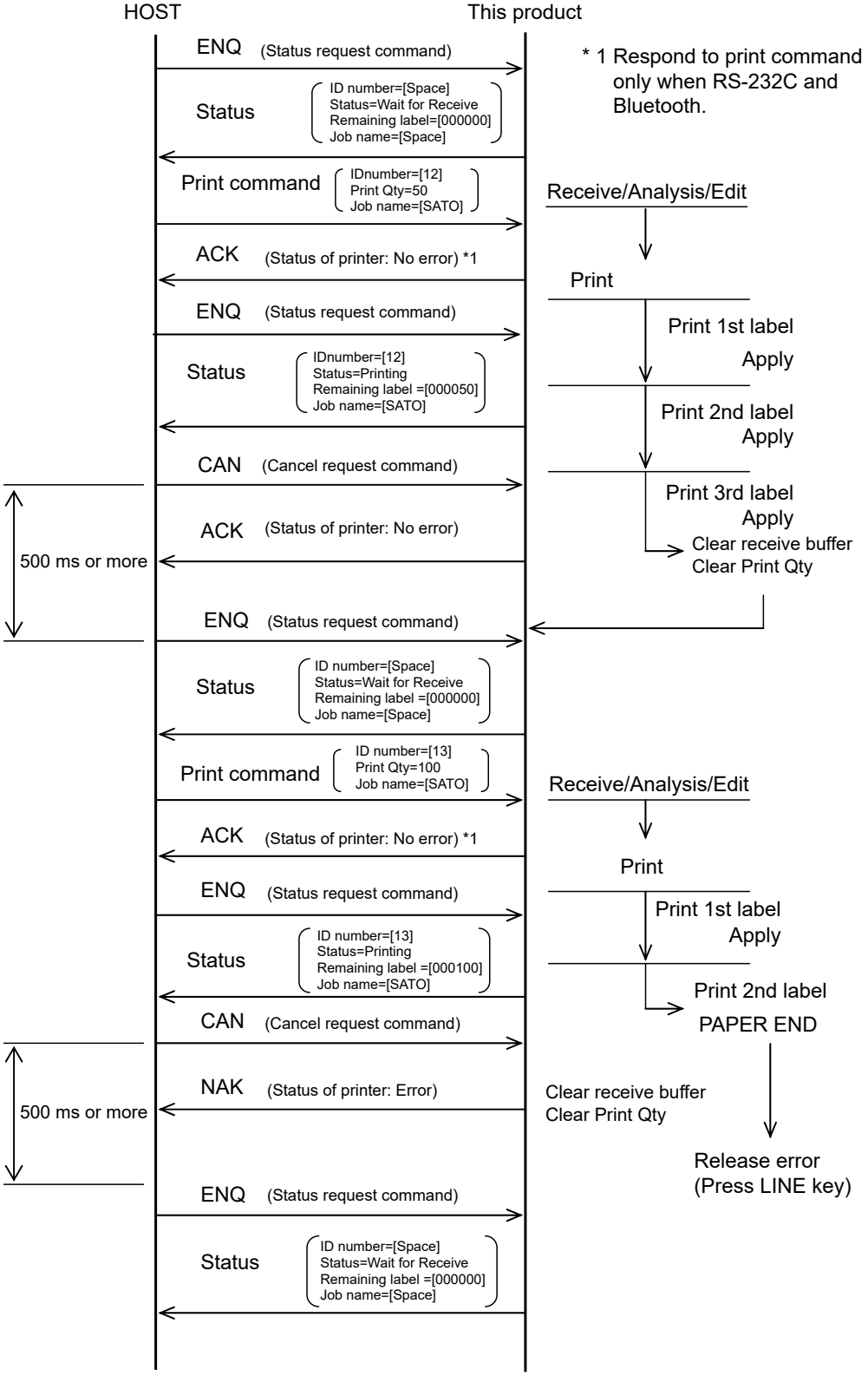

Status5

The purpose of this communication protocol is to monitor and to control the status of printer data on host, and this communication protocol has variety of functionalities.

Receive mode for this communication protocol is multi buffer mode.

Receiving Buffer Control

This protocol has 2 contributing factors to detect receive buffer near full to control information like receiving, print, cancel per item.

Contributing factor to receive buffer near full

"Receive buffer near full" occurs when the buffer's free space goes down to 0.95 MB out of the 2.95 MB of receive buffer.

Contributing factor to cancellation of receive buffer near full

"Receive buffer near full" is cleared when the buffer's free space increased to 1.95 MB.

Return sequence

Please refer to "Printer Status" described below when "LAN/Wireless LAN" interface is used.

Normal process

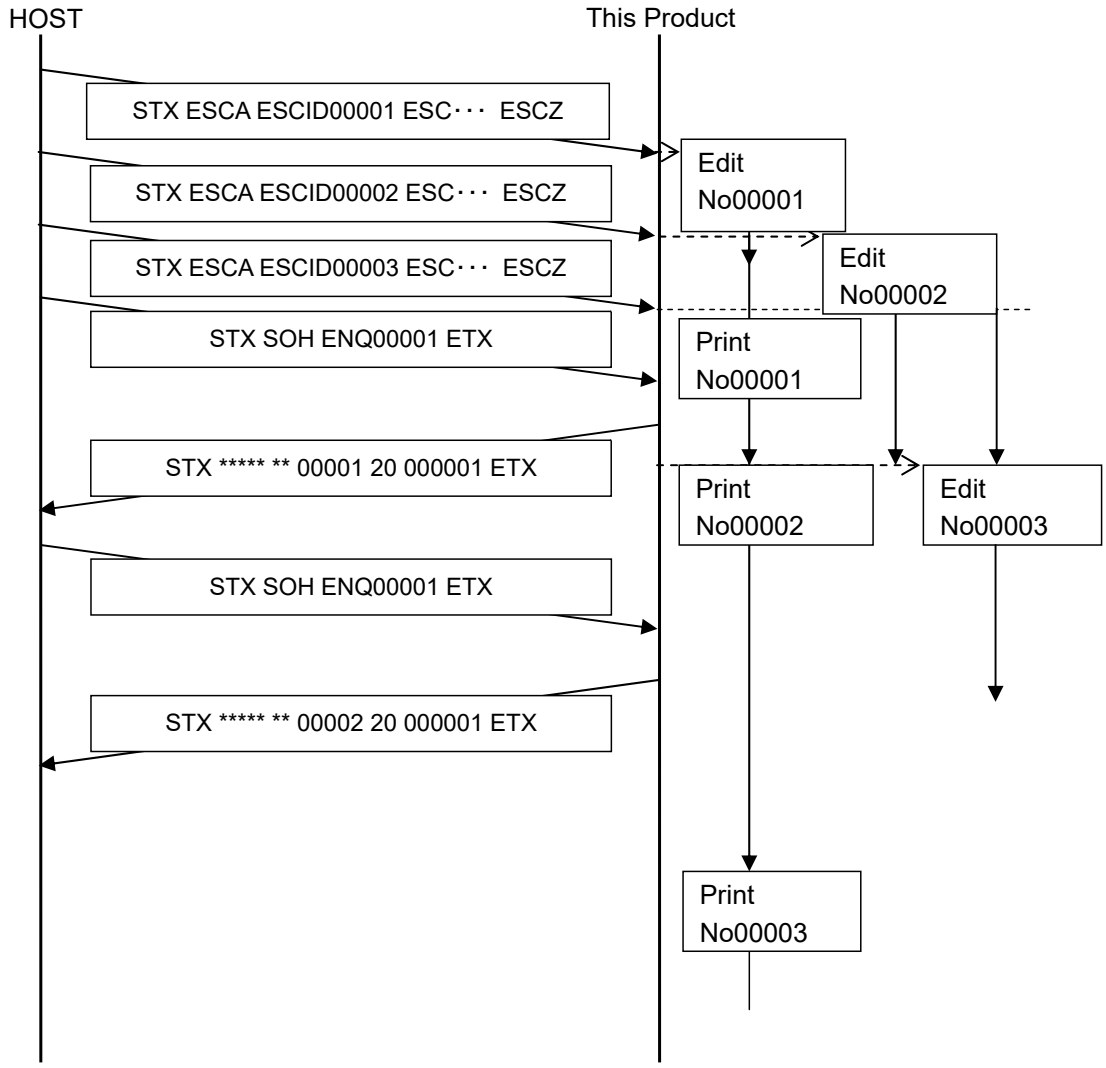

Cancellation

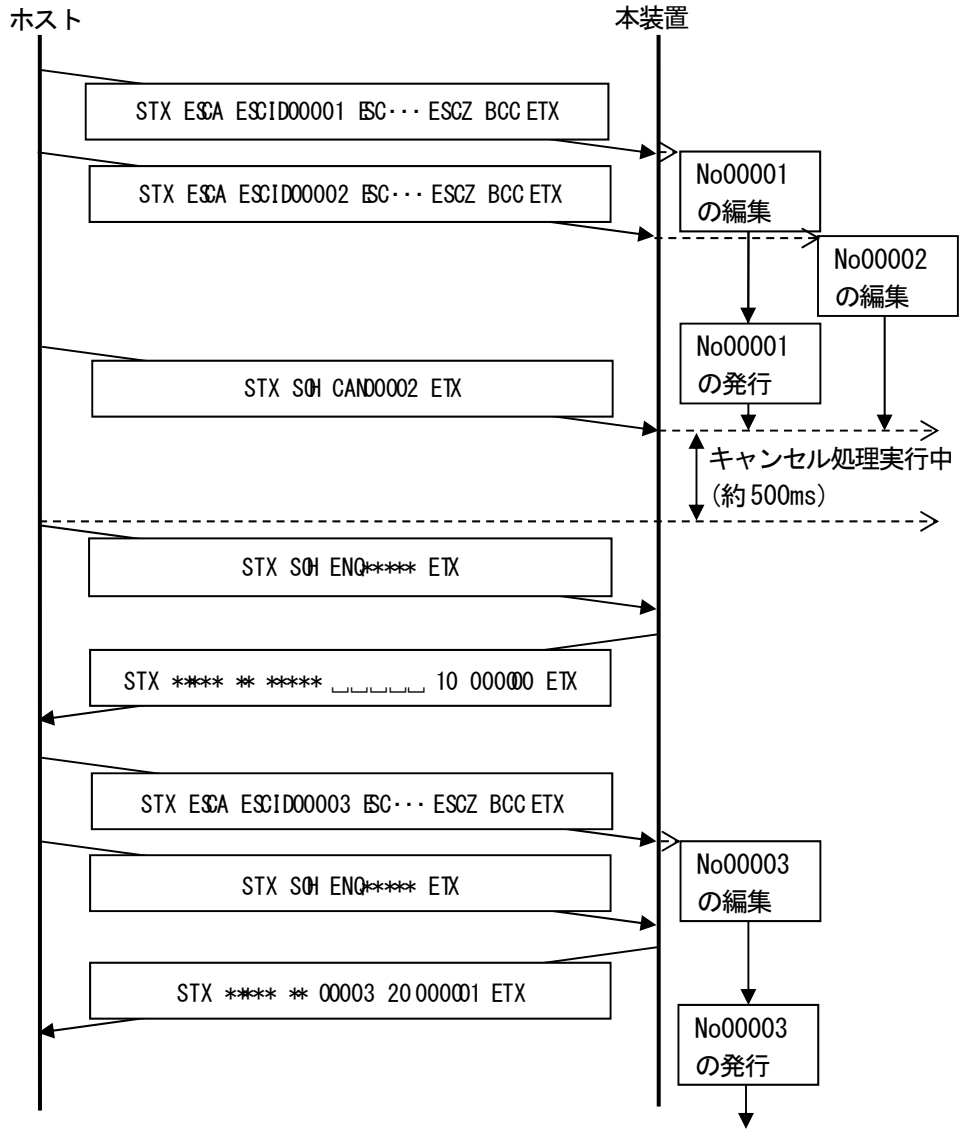

Error handling

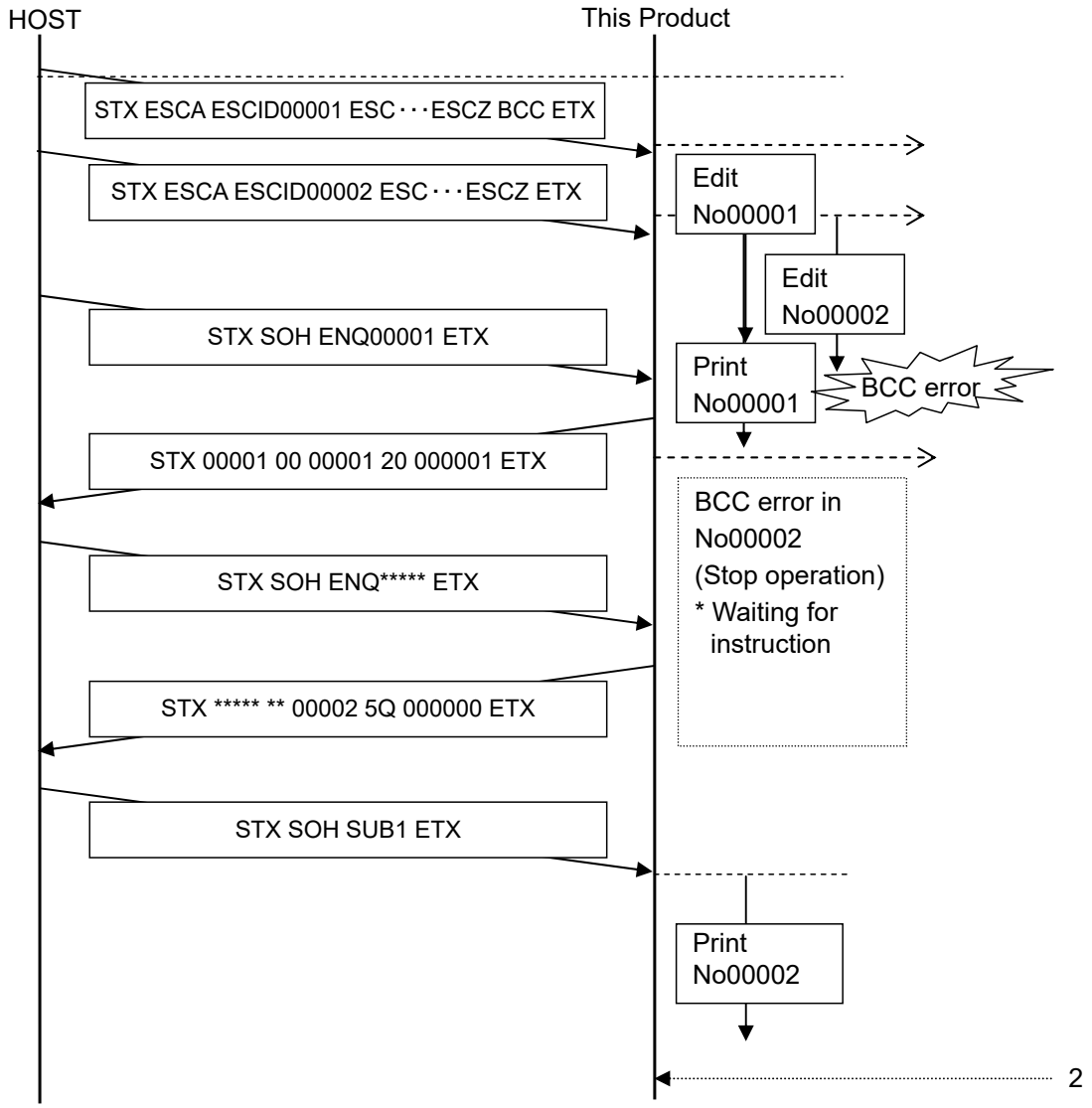

RS-232C

Basic Specifications

This interface complies with RS-232C standard.

Various communication settings are available by the interface mode of this product.

Interface

D-sub 9pin Female

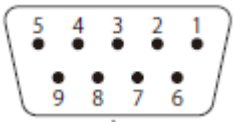

Communication Settings

Setting range in communication settings mode

Item	Configuration	Initial value
Data bit length	7, 8 (bit)	8 bit
Parity bit	NONE, ODD, EVEN	NONE
Stop bit	1, 2 (bit)	1 bit
Baud rate	2400, 4800, 9600, 19200, 38400, 57600, 115200 (bps)	115200bps
Protocol	READY/BUSY, XON/XOFF, Status3, Status4, Status5 Refer to Communication protocol for details.	Status4
BCC check for status5	Enable / Disable	Disable

Synchronization method

Asynchronous method

Receive buffer size

2.95 MB

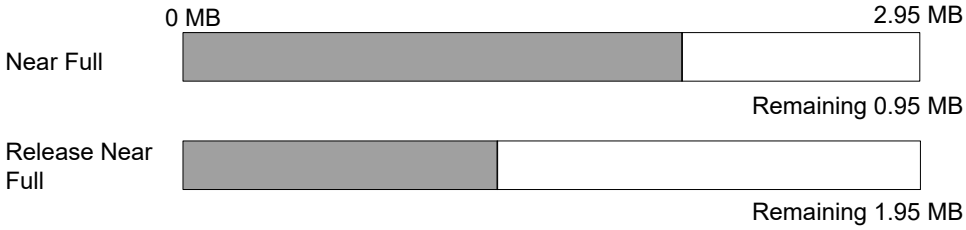

Code

ASCII (7 bits) Graphic (8 bits)

Connector

Product side: DSUB9 pin (female)

Cable side: DSUB9 pin (male)

Cable length: Equal to or less than 5 m

Transmission format

Start	b1	b2	b3	b4	b5	b6	b7	b8	Stop

When 7bit format is used, b8 is omitted.

Signal Level

High level: +5 to +12 V

Low level: -5 to -12 V

READY/BUSY

This communication protocol controls the reception of print data by the control of hard signal only.

When the print data (STX <A> ~ <Z> ETX) has been sent from the host in the conditions below, received data may not be accurate:

1) When the printer is in offline state.

2) When an error has occurred in the printer.

Connection diagram

1) DB-9P

This product			Host	
CD	1		1	CD
RD	2	————	3	SD
SD	3	————	2	RD
ER	4	————	6	DR
SG	5	————	5	SG
DR	6	————	4	ER
RS	7	————	8	CS
CS	8	————	7	RS

I/O signal

Pin no.	Signal name	I/O	Contents
2	RD	Input	Data transferred from the host to this product
3	SD	Output	Data transferred from this product to the host
4	ER	Output	Data device ready
5	SG	-	Signal ground
6	DR	Input	Data set ready
7	RS	Output	Transmission request
8	CS	Input	Transmission available

Timing chart of multiple receive

1) Normal process

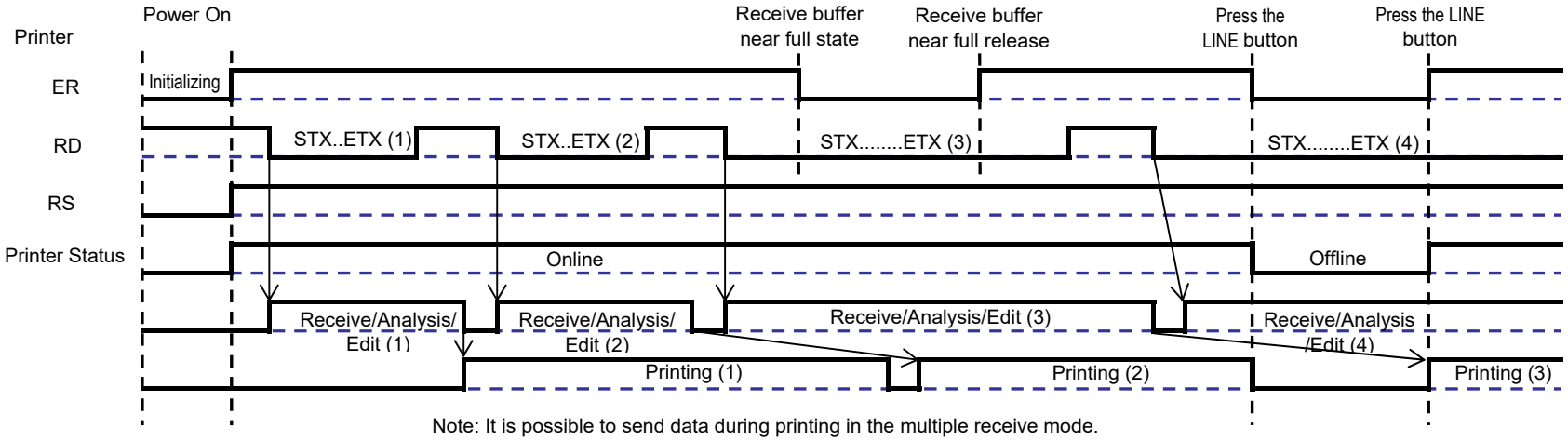

Note: It is possible to send data during printing in the multiple receive mode.

2) Error process

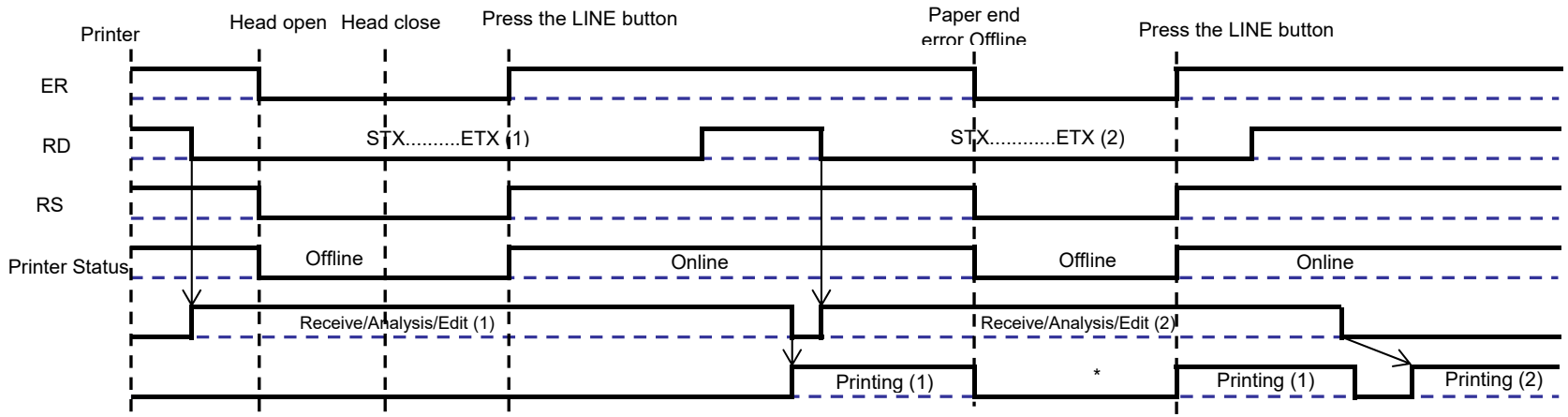

∗ When the paper end error occurs, open the head, set label, close the head and feed.

Note: (1) The paper end error will be released when the head is closed.

XON/XOFF

本通信プロトコルは、本製品がデータ受信可能状態にあるか否かを、SD線に“XON”（16進 11H）または“XOFF”（16進 13H）コードを送出することによりホストに伝えます。

ホストから受信した印字データ（STX <A>～ <Z> ETX）が保証されない条件は2つあります。

- 本製品がオフライン状態である
- 本製品でエラーが発生している

Connection diagram

1) DB-9P

This product			Host	
RD	2	————	3	SD
SD	3	————	2	RD
SG	5	————	5	SG

* Depending on the host used, it may need to loop CS and RS (constantly maintain at “High” level) on the host side. For more details, refer to your host computer documentation.

I/O signal

Pin no.	Signal name	I/O	Contents
2	RD	Input	Data transferred from the host to this product
3	SD	Output	Data transferred from this product to the host
5	SG	-	Signal ground

Timing chart of multiple receive

1) Normal process

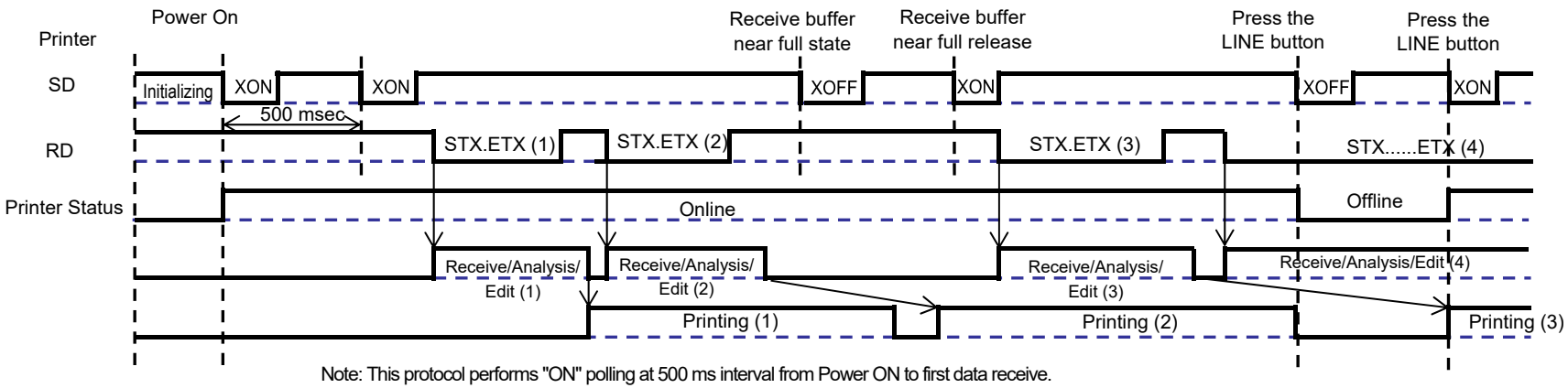

Note: This protocol performs "ON" polling at 500 ms interval from Power ON to first data receive.

2) Error process

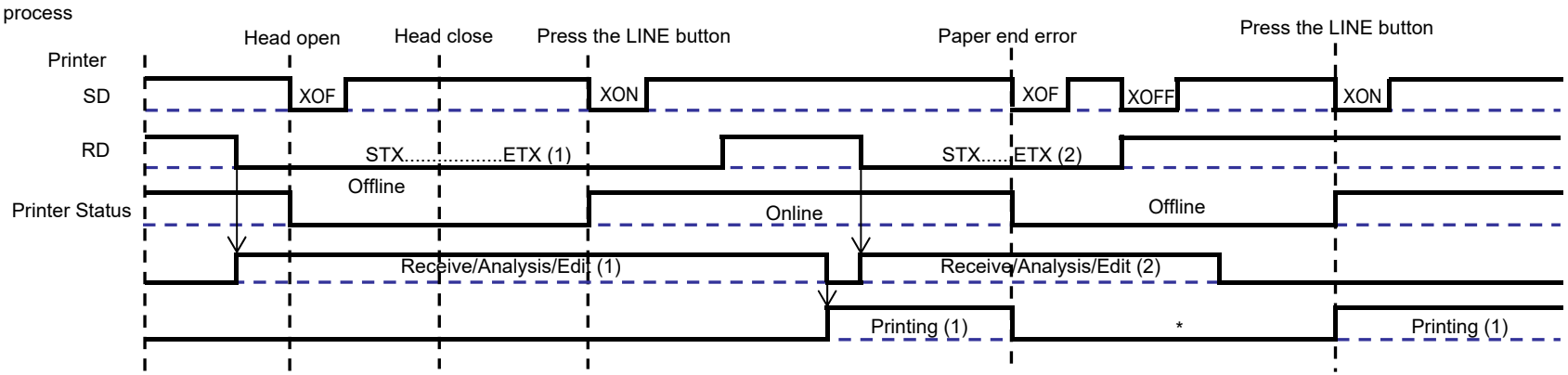

* When the paper end error occurs, open the head, set label, close the head and feed.
Note: (1) The paper end error will be released when the head is closed.
(2) XOFF will be sent when data is received during an error.

Status5 Return

The purpose of this communication protocol is to monitor and to control the status of printer data on host, and this communication protocol has variety of functionalities.

Receive mode for this communication protocol is multi buffer mode.

Connection diagram

1) DB-9P

This product			Host	
RD	2	————	3	SD
SD	3	————	2	RD
SG	5	————	5	SG

* Depending on the host used, it may need to loop CS and RS (constantly maintain at “High” level) on the host side. For more details, refer to your host computer documentation.

I/O signal

Pin no.	Signal name	I/O	Contents
2	RD	Input	Data transferred from the host to this product
3	SD	Output	Data transferred from this product to the host
5	SG	-	Signal ground

Timing chart

1) Normal process

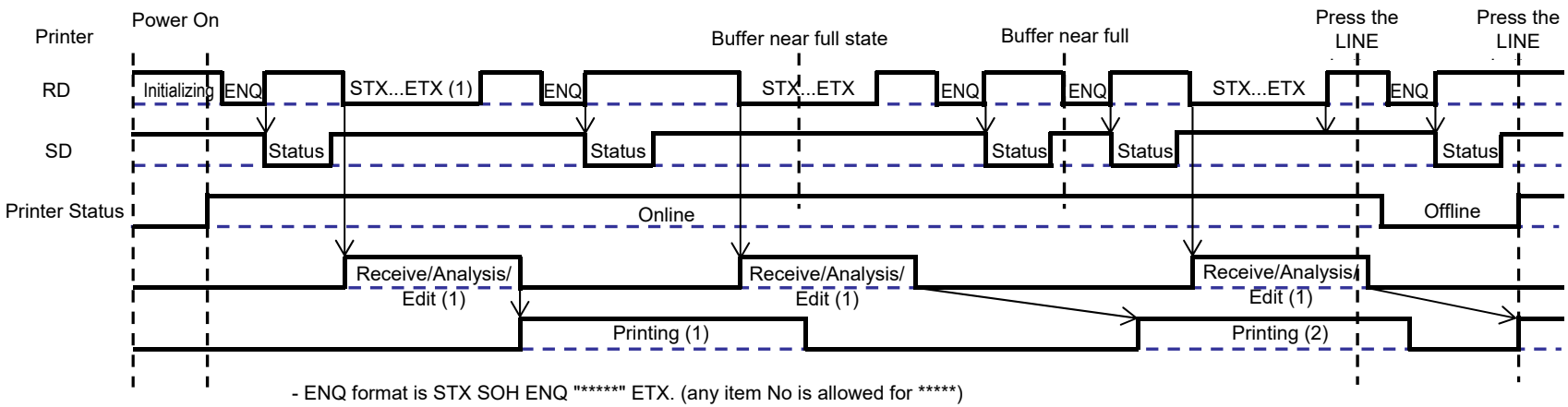

- ENQ format is STX SOH ENQ "******" ETX. (any item No is allowed for *****)
- Avoid ENQ transmission while sending the print data (STX <A> - <Z> ETX).
  This may cause return status error or print error.

2) Cancel process

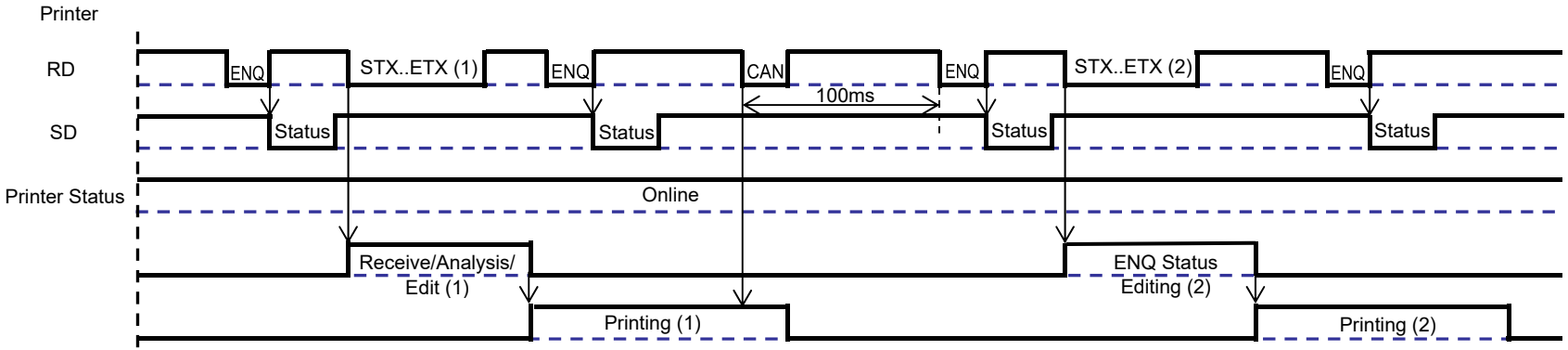

- CAN format is STX SOH "*****" ETX. (any item No is allowed for *****)
- To send the next data, wait around 500ms after sending the cancel request.
- Avoid processing cancellation during sending print data (STX <A> - <Z>ETX). This may cause the problem on cansellation or printing.

3) Error process

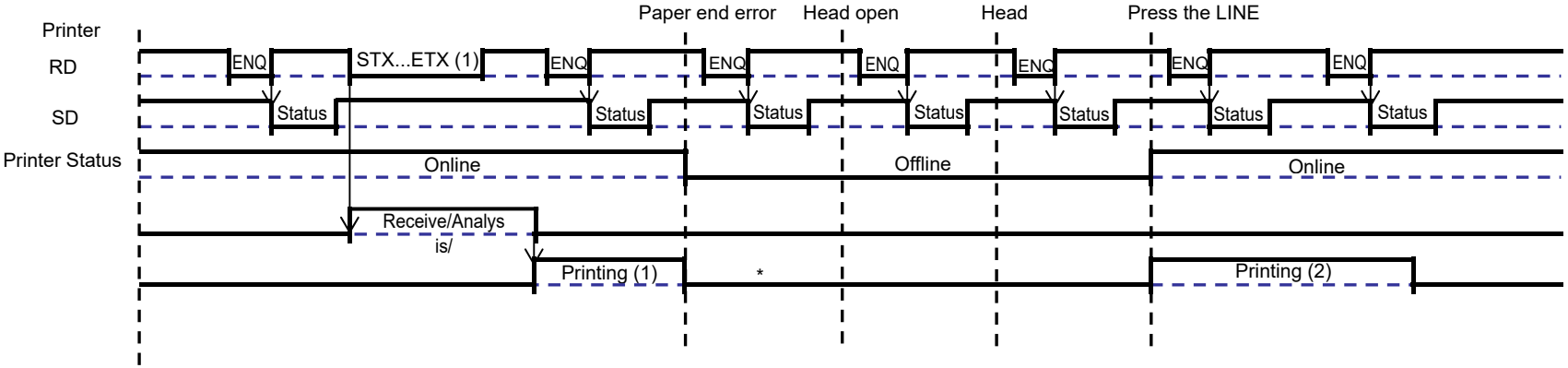

* When the paper end error occurs, open the head, set label, close the head and feed.
Note:(1) The paper end error will be released when the head is closed.

4) Pause, resume process

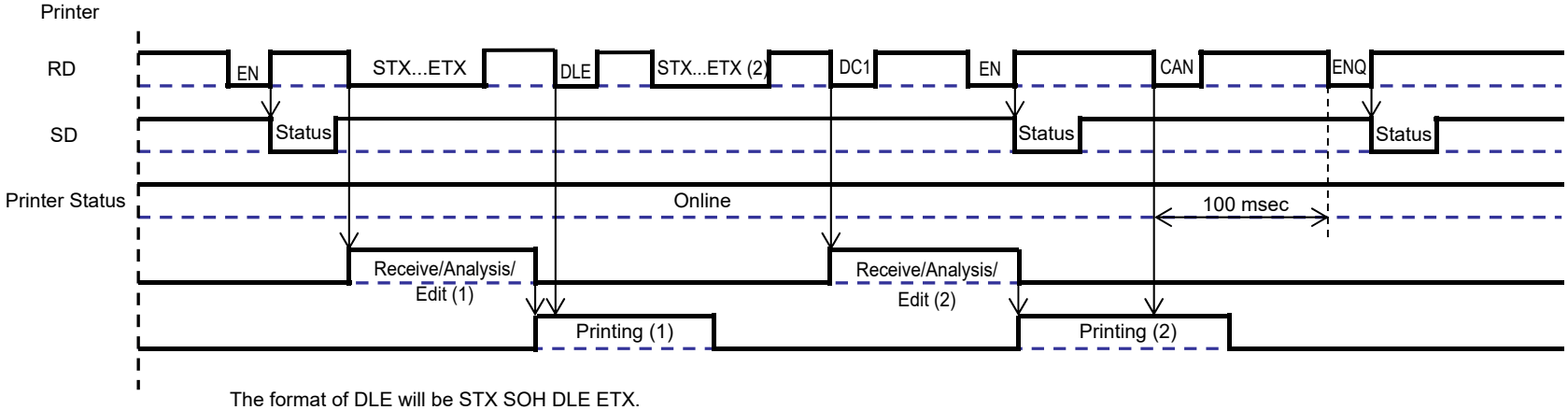

The format of DLE will be STX SOH DLE ETX.
The format of DC1 will be STX SOH DC1 ETX.

5) Information request command process

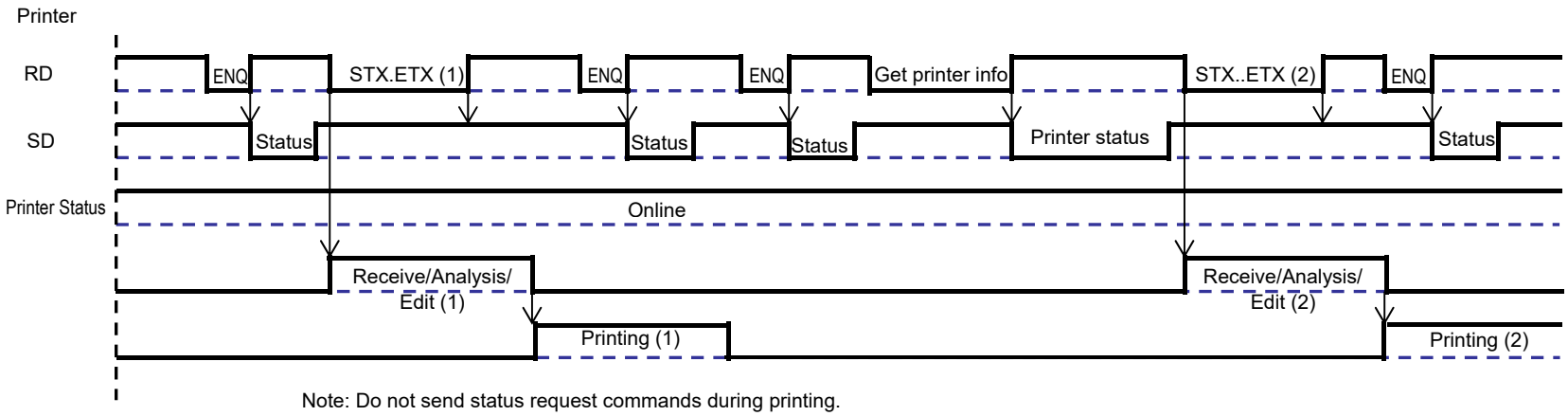

Note: Do not send status request commands during printing.

6) BCC error process

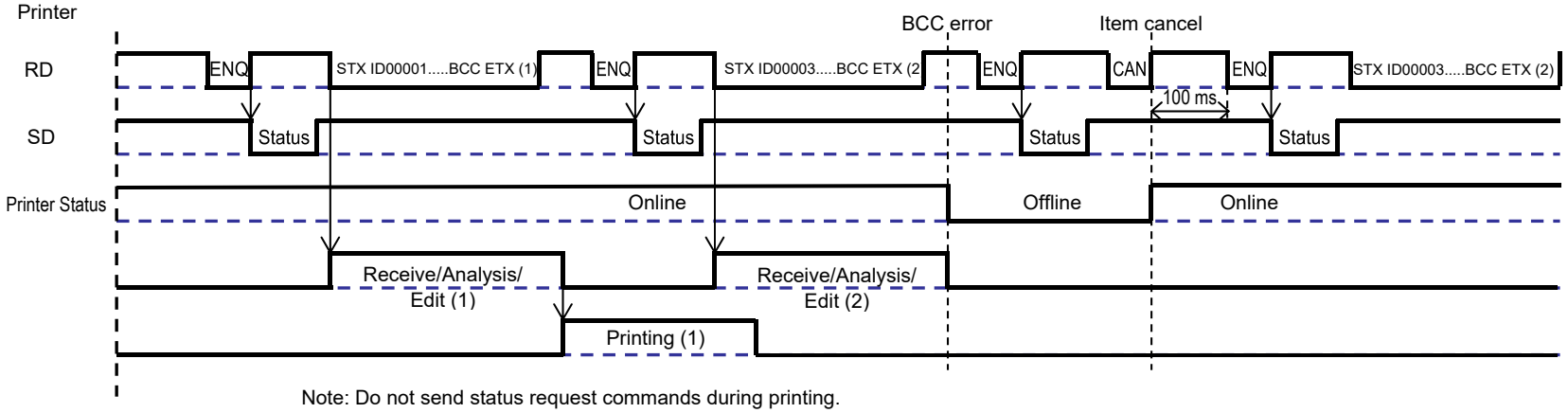

Note: Do not send status request commands during printing.

Status4

The purpose of this communication protocol is to control the status of this product on host and to return status from this product with request command from host.

Status is returned immediately after receiving request command.

Receive mode for this communication protocol is multi buffer mode.

Connection diagram

1)DB-9P

This product			Host	
RD	2	————	3	SD
SD	3	————	2	RD
SG	5	————	5	SG

* Depending on the host used, it may need to loop CS and RS (constantly maintain at “High” level) on the host side. For more details, refer to your host computer documentation.

I/O signal

Pin no.	Signal name	I/O	Contents
2	RD	Input	Data transferred from the host to this product
3	SD	Output	Data transferred from this product to the host
5	SG	-	Signal ground

Timing chart

1) Normal process

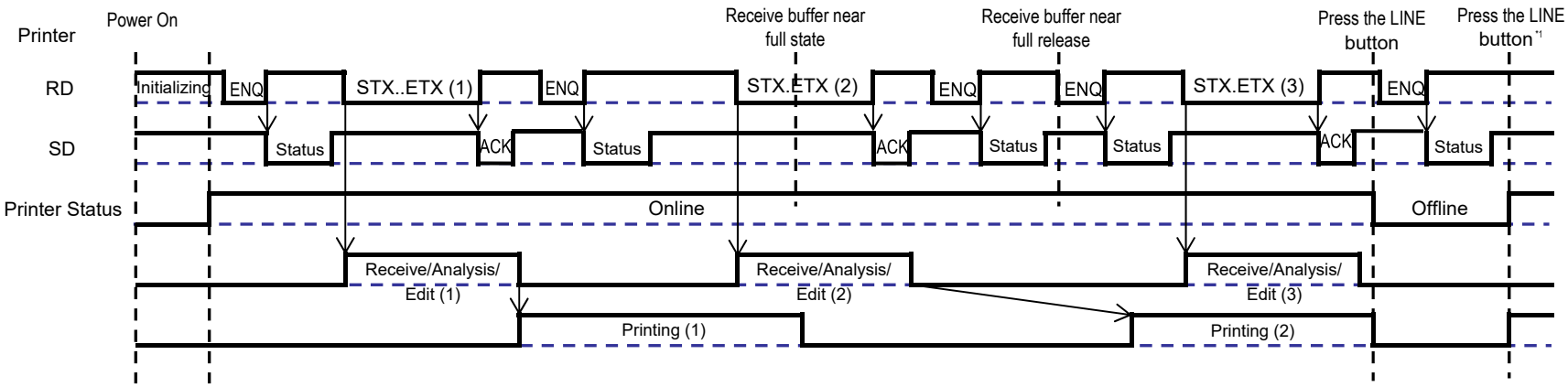

Note: Avoid sending ENQ while sending the print data (STX <A> - <Z> ETX).
This may cause return status error or print error.

2) Cancel process

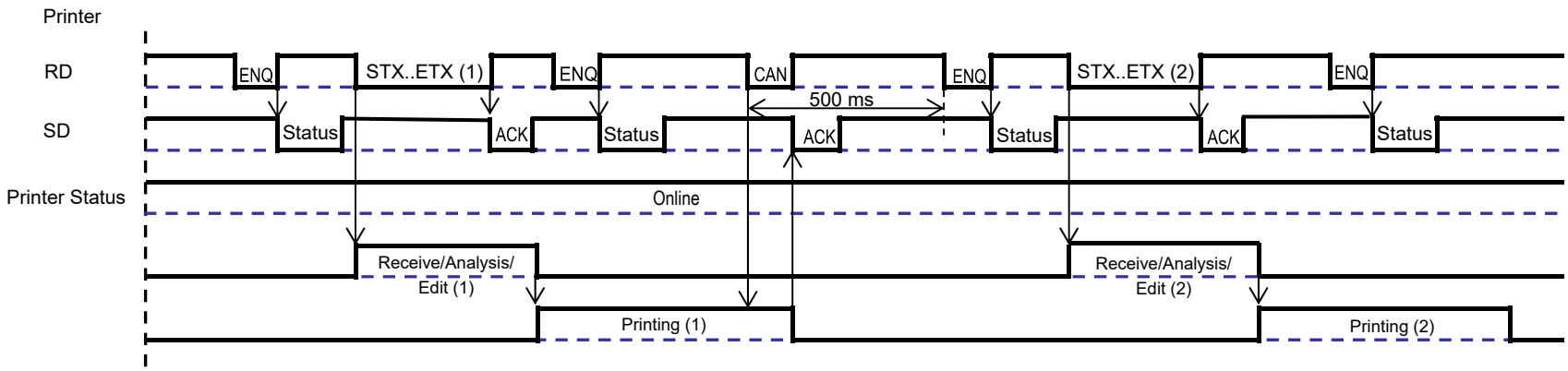

Note: - To send the next data, wait more than 500 ms after sending the cancel request.
- Avoid processing cancellation during sending print data (STX <A> - <Z> ETX). This may cause the problem on canellation or printing.

3) Error process

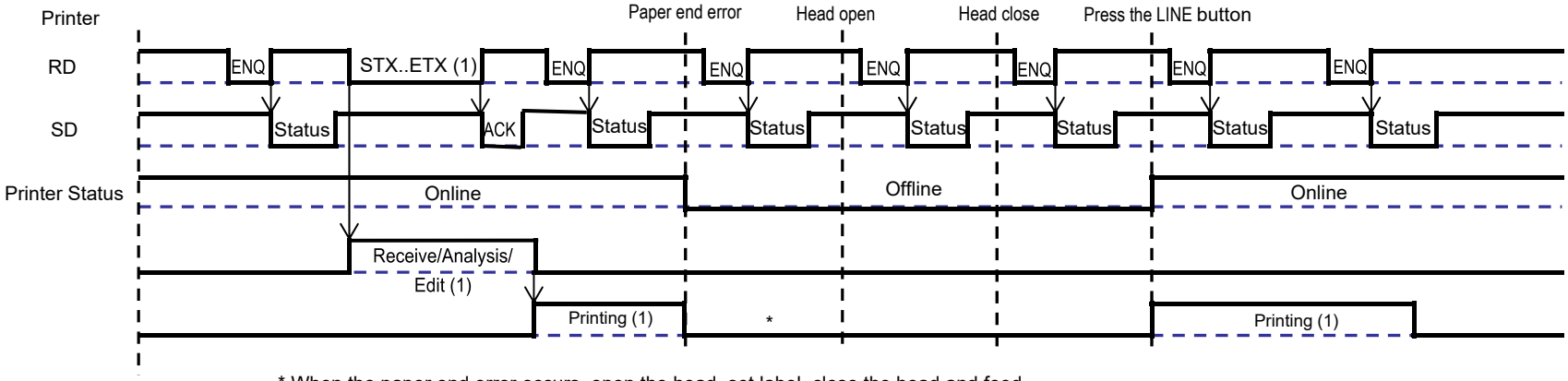

* When the paper end error occurs, open the head, set label, close the head and feed.
Note: - The paper end error will be released when the head is closed.

4) Pause, resume process

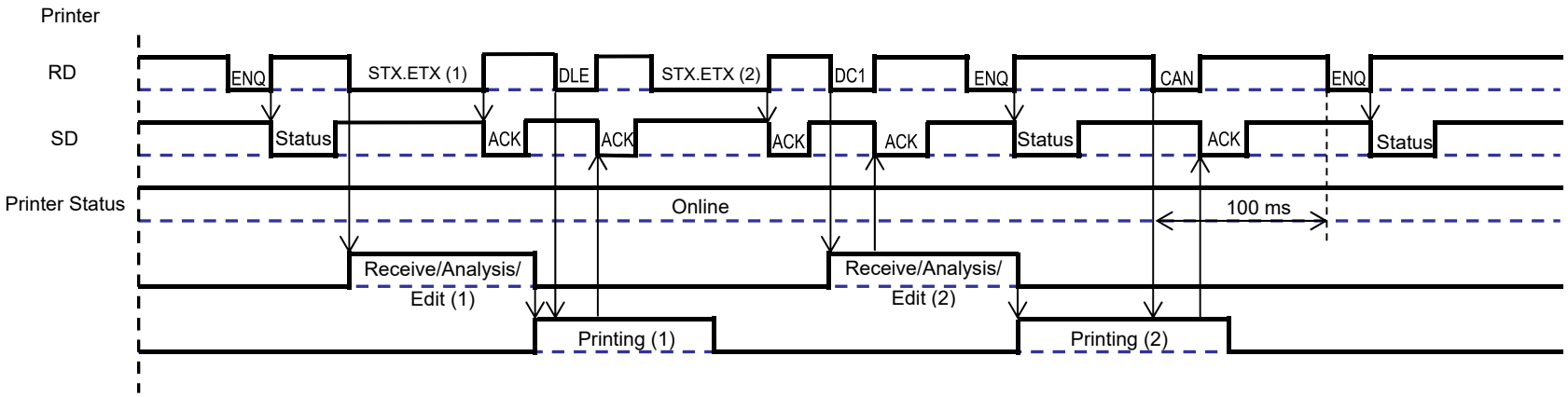

5) Information request command process

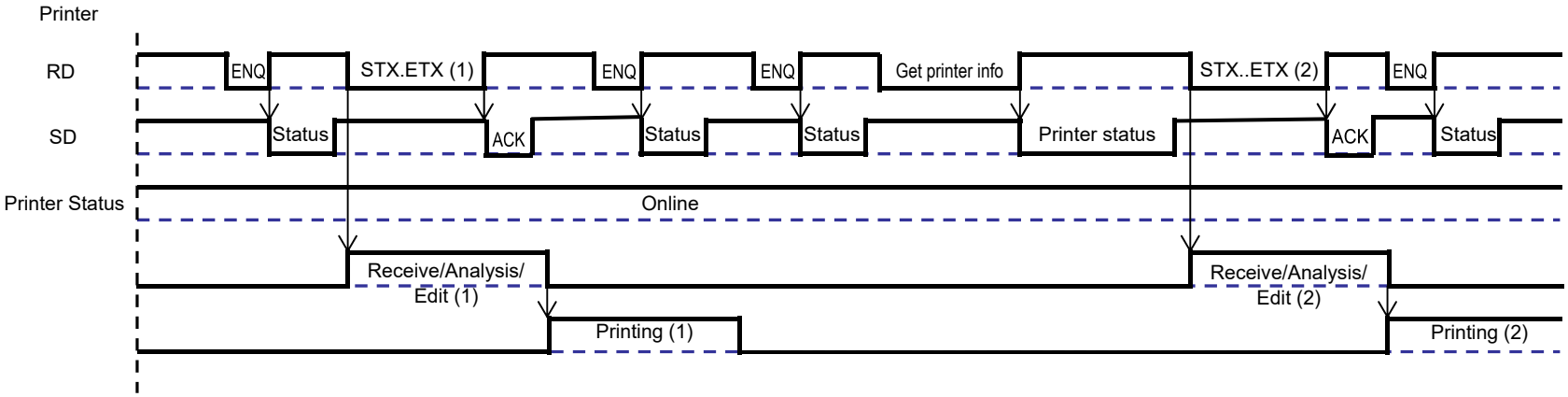

Note: Avoid executing the command to acquire status (e.g. printer operation status) while printing.

Status3 Return

The purpose of this communication protocol is to control the status of this product on host and to return status from this product with request command from host.

Status is returned immediately after receiving request command.

Receive mode for this communication protocol is multi buffer mode.

Connection diagram

1)DB-9P

This product			Host	
RD	2	————	3	SD
SD	3	————	2	RD
SG	5	————	5	SG

I/O signal

Pin no.	Signal name	I/O	Contents
2	RD	Input	Data transferred from the host to this product
3	SD	Output	Data transferred from this product to the host
5	SG	-	Signal ground

Timing chart

1) Normal process

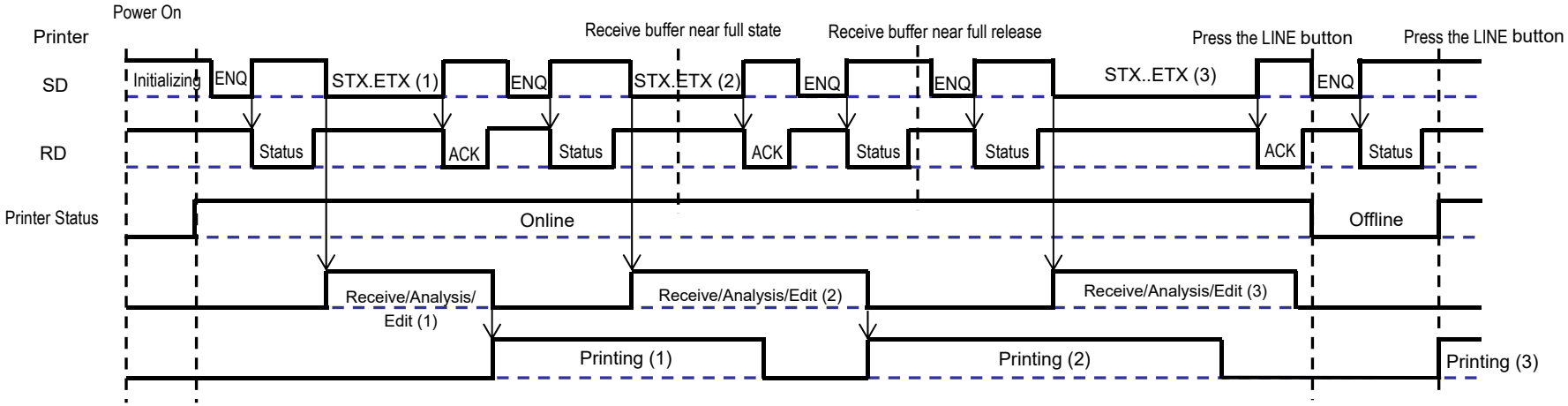

Note: Avoid sending ENQ while sending the print data (STX <A> - <Z> ETX).
This may cause the problem on cancellation or printing.

2) Cancel process

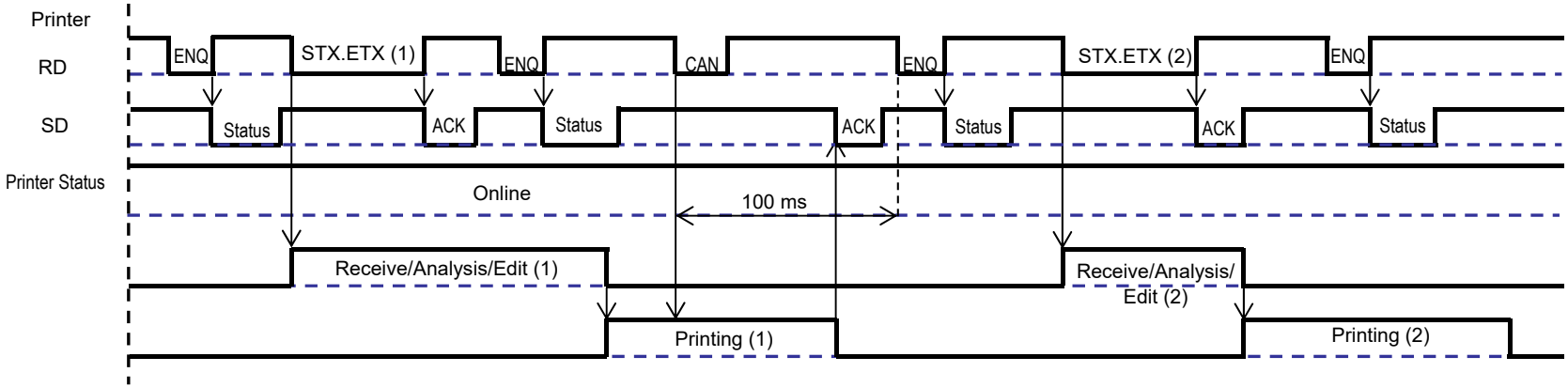

Note: - When the cancel request command has sent, wait more than 500 ms before sending the next data.
- Avoid processing cancellation during print data (STX <A> - <Z> ETX). This may cause problems on cancellation or printing.

3) Error process

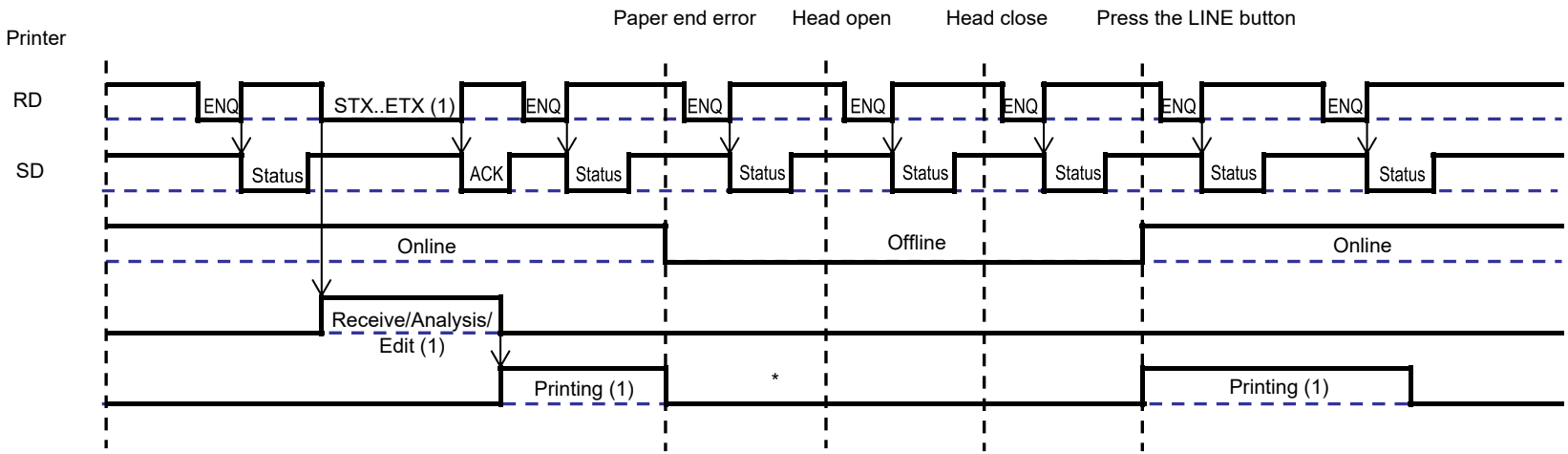

* When the paper end error occurs, open the head, set label, close the head and feed.
Note: (1) The paper end error will be released when the head is closed.

4) Information request command process

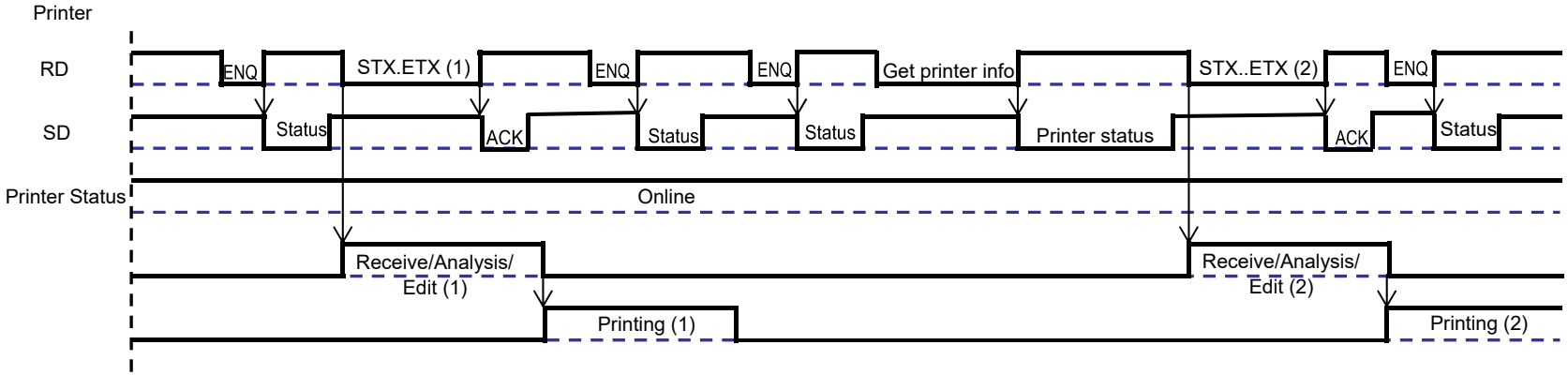

Note: Do not send status request commands during printing.

Notes

- Please mind the following items when using READY/BUSY control.

  Make sure this product is powered when sending print data from host.
- “Receive buffer full” error will occur if you send data larger than receive buffer size (2.95 MB) using XON/XOFF, Status3, Status4, Status5, so make sure to send data equal to or less than 2.9 MB and send data while monitoring printer status.
- Parity error is detected when parity error occurred after receiving ESC+A.

IEEE1284

Basic Specifications

This interface complies with Centronics/IEEE1284 standard.

Interface

Amphenol 36P　female

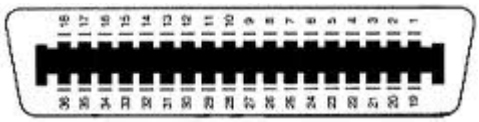

Communication Settings

1) The range of values in communication setting mode

Item	Configuration	Initial value
Protocol	Status4, Status5	StatusL
BCC check for status5	Enabled / Disabled	Disabled

Connector

Product side: Amphenol 36 pin (Female)

Cable side: Amphenol 36 pin (Male)

Cable Length

Equal to or less than 1.5 m

Signal Level

High level: +2.4 to +5.0 V

Low level: +0.0 to +0.4V

Receive Buffer Size

2.95 MB

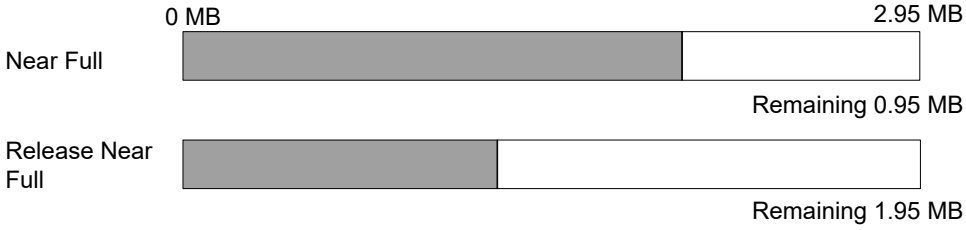

Timing Chart

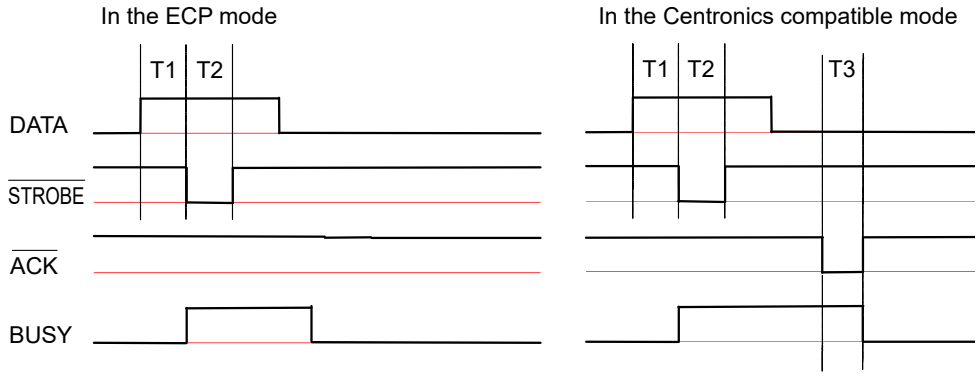

Note 1: 0.75 μs ≦ T1
0.75 μs ≦ T2 ≦ 500 μs
0.5 μs < T3 < 1.2 μs

Send print data while the power of this product is ON.

Turn off this product when you disconnect interface cable

Connection diagram

Following is a parallel cable connection diagram.

Use a cable complies with IEEE1284 standard.

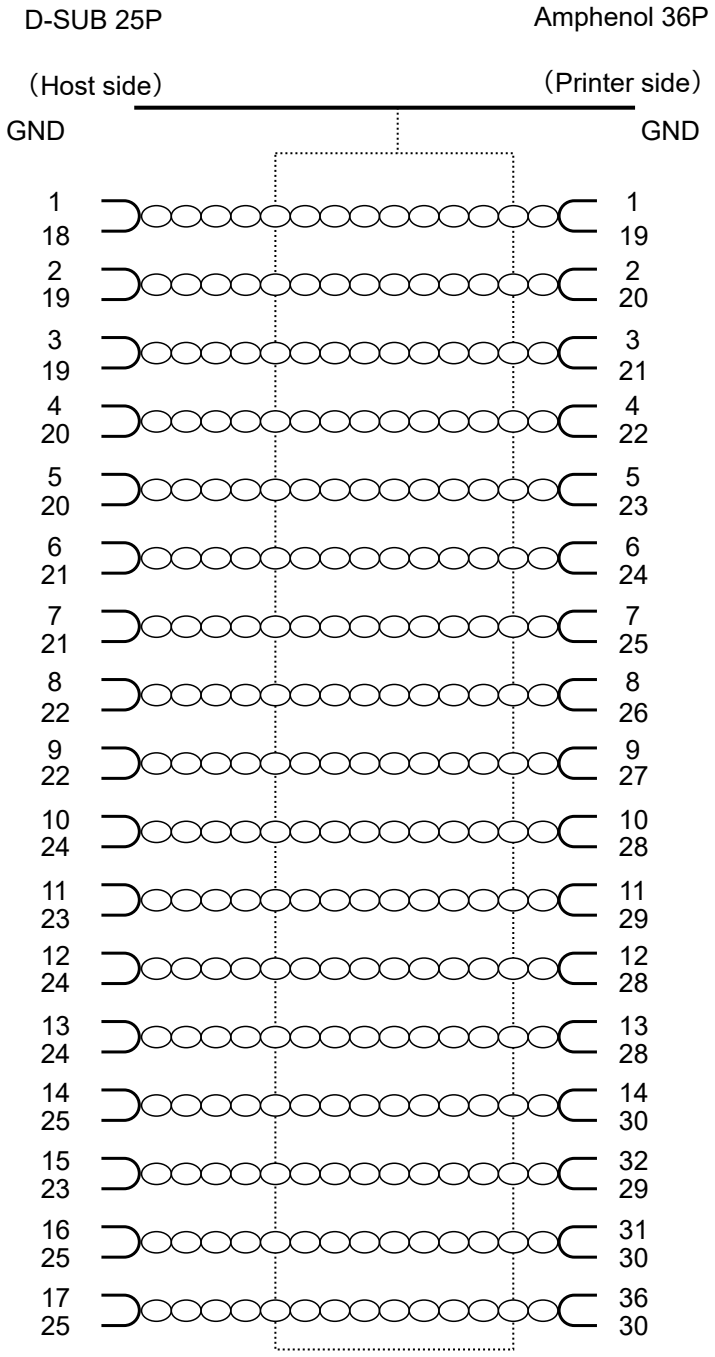

Connector pin assignment

See below for the connector pin assignment of Centronics standard (compatible mode).

When IEEE1284 standard connector is used, connection complies with IEEE1284-B type connector.

Pin no.	Signal name	Contents	Pin no.	Signal name	Contents
1	STROBE	Input	19	STROBE-RETURN	
2	DATA 1	Input	20	DATA 1-RETURN	
3	DATA 2	Input	21	DATA 2-RETURN	
4	DATA 3	Input	22	DATA 3-RETURN	
5	DATA 4	Input	23	DATA 4-RETURN	
6	DATA 5	Input	24	DATA 5-RETURN	
7	DATA 6	Input	25	DATA 6-RETURN	
8	DATA 7	Input	26	DATA 7-RETURN	
9	DATA 8	Input	27	DATA 8-RETURN	
10	ACK	Output	28	ACK-RETURN	
11	BUSY	Output	29	BUSY-RETURN	
12	PE	Output	30	PE-RETURN	
13	SELECT	Output	31	INIT	Input
14	AUTOFD	Input	32	FAULT	Output
15			33		
16	LOGIC GND		34		
17	CHASSIS GND		35		
18	PERIPHERAL LOGIC HIGH	Input	36	SELECTION	Input

I/O signal

The details of each signal line for the Centronics standard (compatible mode) are as follows.

Note that each signal line complies with the IEEE1284 standard.

Pin no.	Signal name	I/O	Contents
1	STROBE	Input	Synchronization signal that requires low active pulse to read DATA1 to DATA8
2 to 9	DATA 1~DATA 8	Input	Data entry of 8 bits parallel: DATA1 is LSB (lowest bit) and DATA8 is MSB (highest bit).
10	ACK	Output	Low active pulse signal indicating the completion of receive data import
11	BUSY	Output	High active signal indicating that the printer is not ready to receive data
12	PE	Output	High active signal indicating paper shortage
13	SELECT	Output	High active signal indicating that the printer is ready to receive data
14	AUTOFD	Input	Signal for the IEEE1284 standard
17	CHASSIS GND		Connecting to the chassis ground
18	PERIPHERAL LOGIC HIGH	Output	+5V voltage on the printer side
19 to 30	SIGNAL GROUND		Connecting to each signal ground
31	INIT	Input	Low active pulse signal initializing the printer
32	FAULT	Output	Low active pulse signal indicating an error in the printer
36	SELECTIN	Input	Signal for the IEEE1284 standard

Timing chart of multiple receive

(1) Normal process

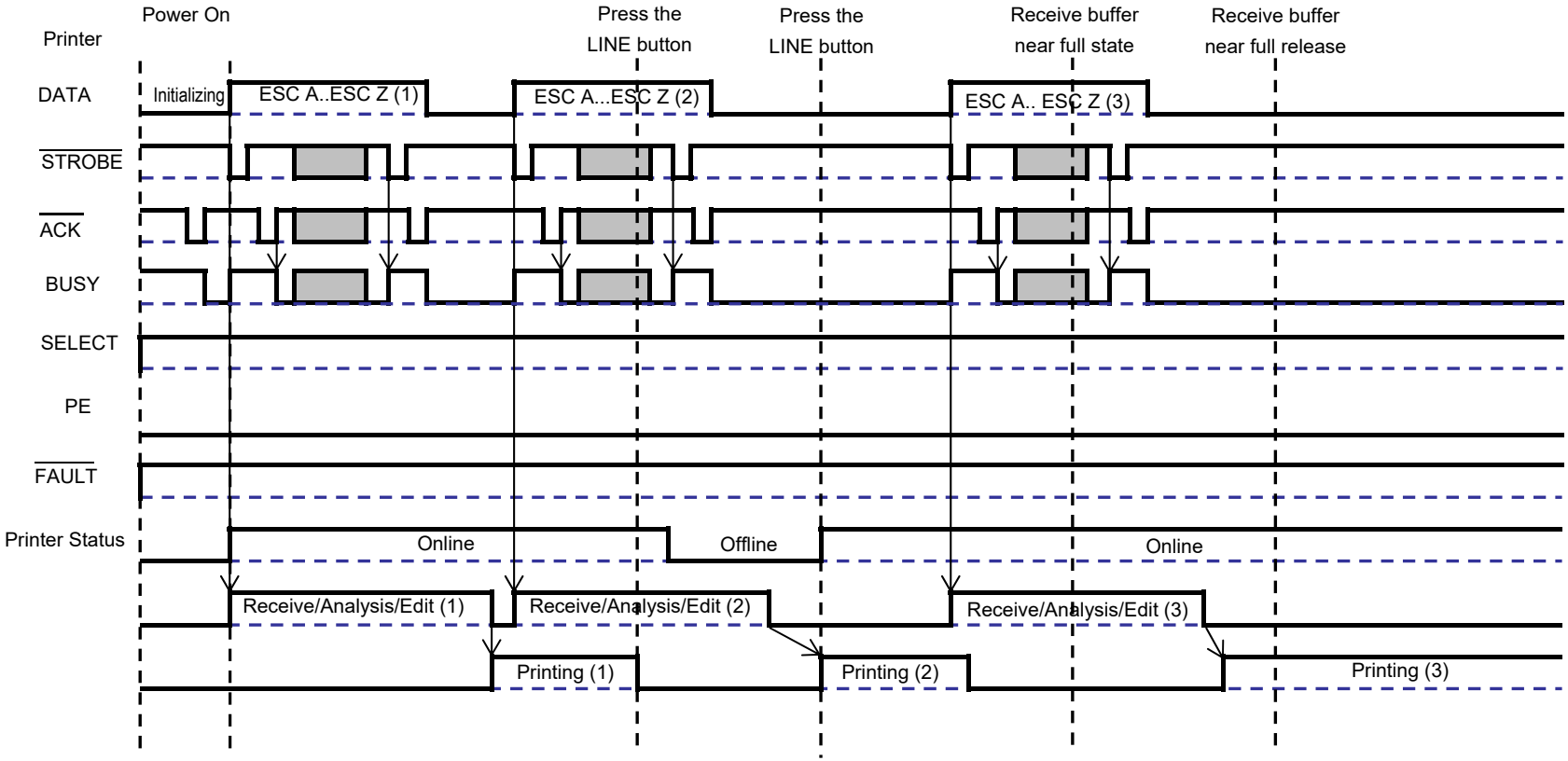

(2) Process at the paper end

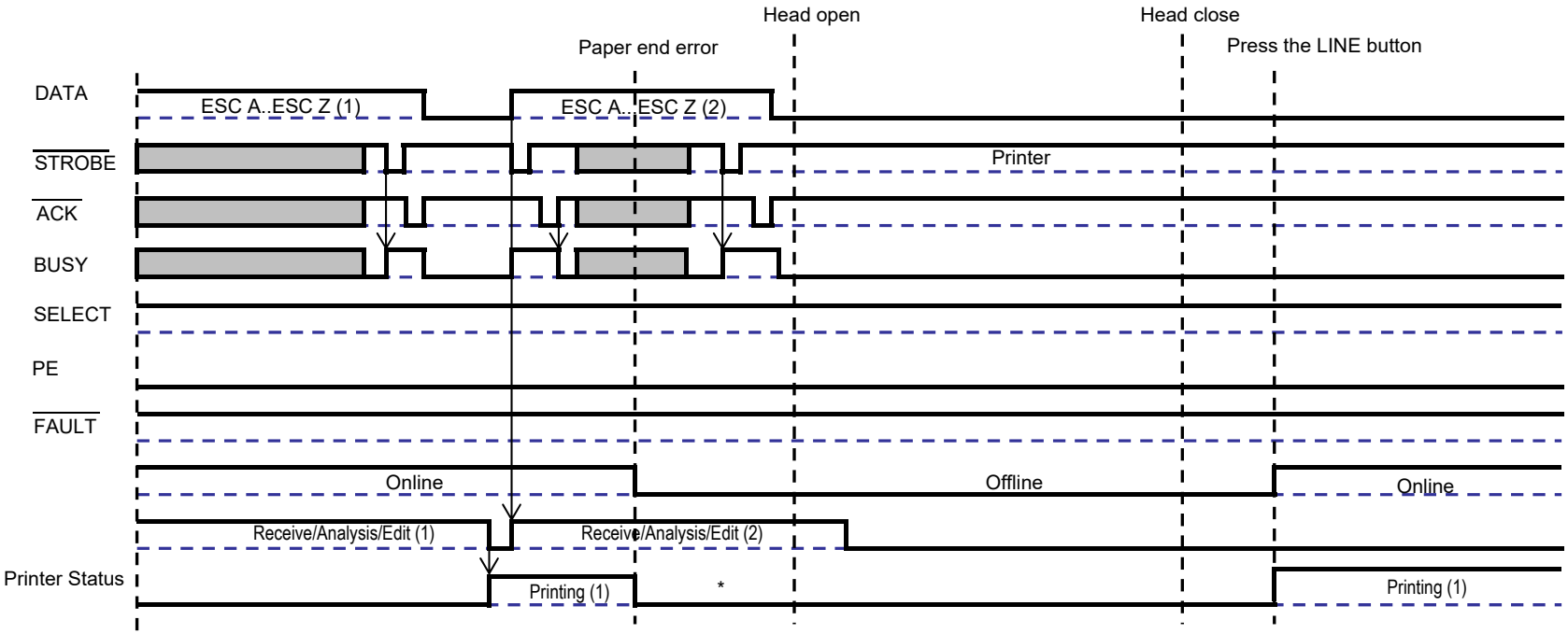

*When the paper end error occurs, open the head, set label, close the head and feed.
Note: The paper end error will be released when the head is closed.

USB

Basic Specifications

USB interface of this product complies with USB2.0 standard.

Interface

Type B (Female part)

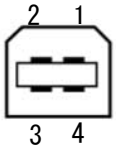

Communication Settings

Setting range in communication settings mode

Item	Setting value	Initial value
Protocol	Status4, Status5	Status4
BCC check for status5	Enabled, Disabled	Disabled
Change USB Serial	Enabled, Disabled	Disabled

Connector

Series B plug

Length of cable: 5m or less (Twisted Pair Shielded)

Version

USB2.0 High-speed

Receive Buffer Size

2.95 MB

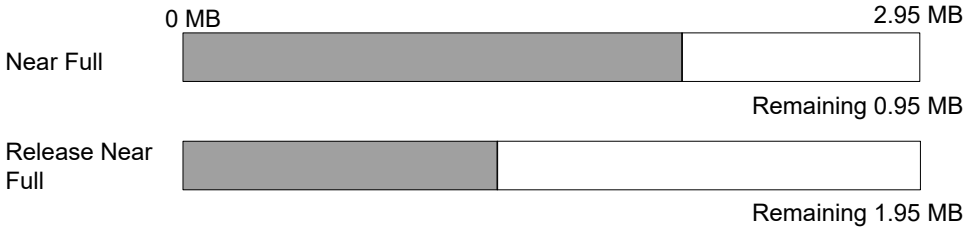

Connector Pin Assignment

Pin No.	Name
1	VBus
2	-Data(D-)
3	+Data(D+)
4	GND

LAN/Wireless LAN

Basic Specifications (LAN)

Interface

RJ45

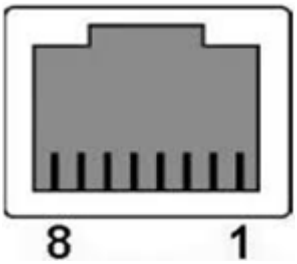

Connector

Connector Type: RJ-45

Cable Type: For 10BASE-T, 100BASE-TX (Category 5 or upper)

Cable length: Equal to or less than 100 m

Link/Status LED

LED lights when link is established with Ethernet device or when packet is received.

LED	Color	Operation
LED1	Green	Lights at a moment after receiving packet (10 ms).
LED2	Yellow	Lights off when access point is recognized as 10BASE-T.
		Lights on when access point is recognized as 100BASE-TX.
		Lights on when cable is disconnected.

Protocol

Following communication protocol is configurable.

Setting item	Setting range
Protocol	Status3 return Status4 return (Cycle response mode) Status4 return (ENQ response mode) Status5 Return

Receive buffer size

2.95 MB

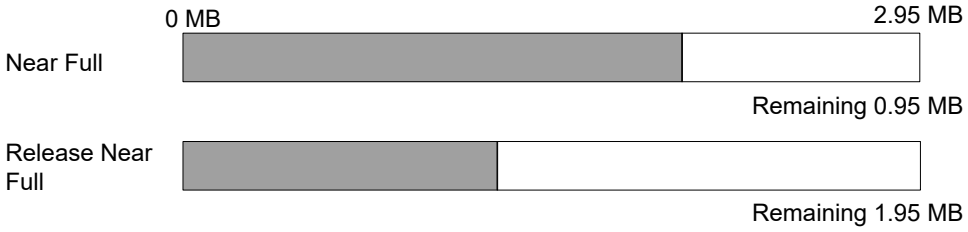

LAN settings / Display items

Following chart lists configurable and referable items.

TCP/IP-related setting

Setting item	Setting range	Initial value (Factory setting)
LAN/WLAN Switching	AUTO LAN Wi-Fi	AUTO
DHCPv4 setting	Enabled Disabled	Enabled
IPv4 Address	0.0.0.0 to 255.255.255.255	0.0.0.0
IPv4 Subnet mask	0.0.0.0 to 255.255.255.255	255.255.255.0
IPv4 Default gateway	0.0.0.0 to 255.255.255.255	0.0.0.0
IPv4 DNS primary address	0.0.0.0 to 255.255.255.255	0.0.0.0
IPv4 DNS secondary address	0.0.0.0 to 255.255.255.255	0.0.0.0
IPv6 address resolution	Manual DCHP AUTO Disabled	Disabled
IPv6 Address	AAAA:BBBB:CCCC:DDDD:EEEE:FFFF:GGGG:HHHH ASCII for 128 bits A to H is "0" to "9", "A" to "F.” A to H is omissible.	::
IPv6 Default Router	AAAA:BBBB:CCCC:DDDD:EEEE:FFFF:GGGG:HHHH ASCII for 128 bits A to H is "0" to "9", "A" to "F.” A to H is omissible.	::
IPv6 Subnet prefix	1 to 128	64
IPv6 DNS primary address	AAAA:BBBB:CCCC:DDDD:EEEE:FFFF:GGGG:HHHH ASCII for 128 bits A to H is "0" to "9", "A" to "F.” A to H is omissible.	::
ARP Announcement additional	Enabled Disabled	Enabled
ARP Announcement period	"0" to "600” (sec)	0

Setting item	Setting range	Initial value (Factory setting)
KEEPALIVETIME	"30" to "300" (sec)	180
KEEPALIVECOUNT	"1" to "99" (times)	17
SOCKET_CANCEL	"0": Normal mode "1": Compatible mode	0
Communication protocol (SBPL)	Status4 (Cycle) Status4 (ENQ) Status3 Status5 NONE	Status4 (ENQ)
BCC check for status5	Enabled Disabled	Disabled
TCP connection queue	Enabled Disabled	Disabled
Port number 1	1 to 65535[*1]	1024
Port number 2	1 to 65535[*1]	1025
Port number 3	1 to 65535[*1]	9100
SNTP functionality	Enabled Disabled	Disabled
SNTP server IPv4 address	0.0.0.0 to 255.255.255.255	0.0.0.0
SNTP error notification functionality	Enabled Disabled	Disabled
SNMP settings	Enabled Disabled	Disabled
SNMP sysContact	0 to 255 of character string	
SNMP sysName	0 to 255 of character string	
SNMP sysLocation	0 to 255 of character string	
SNMP read-only version	1|2c|3 1|2c 3 Disabled	1|2c|3
SNMP read-only community name	Max. 32 digit character	public
SNMP read-only user name	8 to 32 digit long characters	rouser
SNMP read-only security	none Authentication Privacy (encrypted)	none
SNMP read-only authentication protocol	MD5 SHA	MD5
SNMP read-only authentication password	8 to 32 digit long characters	mypassword
Protocol for SNMP read-only authentication encryption	DES AES	DES
SNMP read-only encryption password	8 to 32 digit long characters	mypassword

Setting item	Setting range	Initial value (Factory setting)
SNMP read-write	1|2c|3 1|2c 3 Disabled	1|2c|3
SNMP read-write community name	Max. 32 digit character	private
SNMP read-write user name	8 to 32 digit long characters	rwuser
SNMP read-write security	none Authentication Privacy (encrypted)	none
SNMP read-write authentication protocol	MD5 SHA	MD5
SNMP read-write authentication password	8 to 32 digit long characters	mypassword
SNMP read-write encryption protocol	DES AES	DES
SNMP read-write encryption password	8 to 32 digit long characters	mypassword
SNMP trap	Enabled Disabled	Disabled
SNMP trap version	SNMPv1 SNMPv2c SNMPv3	SNMPv1
SNMP trap destinations	Destination1 Destination2 Destination3	Destination1
SNMP trap IP version	IPv4 IPv6	IPv4
SNMP IPv4 trap destination1	AAA.BBB.CCC.DDD Allow "0" to "255" for A-D Allow "0” to "255" for A-D	0.0.0.0
SNMP IPv6 trap destination1	AAAA:BBBB:CCCC:DDDD:EEEE:FFFF:GGGG:HHHH ASCII for 128 bits A to H is "0" to "FFFF" A to H is omissible.	::
SNMP IPv4 trap destination2	AAA.BBB.CCC.DDD Allow "0" to "255" for A-D Allow "0” to "255" for A-D	0.0.0.0
SNMP IPv6 trap destination2	AAAA:BBBB:CCCC:DDDD:EEEE:FFFF:GGGG:HHHH ASCII for 128 bits A to H is "0" to "FFFF" A to H is omissible.	::
SNMP IPv4 trap destination3	AAA.BBB.CCC.DDD Allow "0" to "255" for A-D Allow "0” to "255" for A-D	0.0.0.0
SNMP IPv6 trap destination3	AAAA:BBBB:CCCC:DDDD:EEEE:FFFF:GGGG:HHHH	::

Setting item	Setting range	Initial value (Factory setting)
	ASCII for 128 bits A to H is "0" to "FFFF" A to H is omissible.	
SNMP trap community	Max. 32 digit character * Encrypted data	trapcom
SNMP trap user name	Max. 32 digit character * Encrypted data	trapuser
SNMP trap engine ID	Even number 10 to 64 digits	Number generated from Unique Code
SNMP trap security	none Authentication Privacy (encrypted)	none
SNMP trap authentication protocol	MD5 SHA	MD5
SNMP trap authentication password	String of 8 to 32 digits * Encrypted data	mypassword
SNMP trap encryption protocol	DES AES	DES
SNMP trap encryption password	String of 8 to 32 digits * Encrypted data	mypassword
LPD	Enabled Disabled	Enabled
FTP	Enabled Disabled	Disabled
FTP Timeout	"10" to "3600” (sec)	300

[Disclaimer]

*1 Please note that port number 1-1023 is Well-known port. Please use the port on one's own responsibility.
Our company assume no responsible for any failure arising from use.

Basic Specifications(Wireless LAN)

Interface (Wireless LAN PCB)

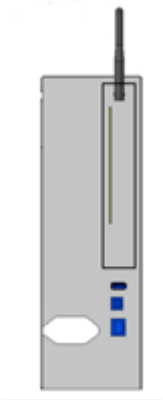

Protocol

Following communication protocol is configurable.

Setting item	Setting range
Protocol	Status3 return Return Status 4 (Cycle response mode) Return Status 4 (ENQ response mode) (Initial value) Status5 return

Wireless status display

Display radio field intensity with icon on screen.

Icon	Name	Description
	Disconnected	Wi-Fi is enabled but is disconnected.
	Wi-Fi radio field intensity	Wi-Fi is connected. Displays intensity (Level 4)

Display Wi-Fi information

Displays information on Wi-Fi on Information/ Wi-Fi Status. The information is updated every 10 seconds.

Specifications of Wi-Fi

Note

- Please consult with your system administrator and make sure that there will be no affect on medical devices and equipment when this product is used near the medical devices and equipment. Refer to the operator manual for details.

Communications Standards

Comply / ac with IEEE802.11a/b/g/n

Communications Standards	Frequency band	Frequency band
IEEE802.11b	2.4 GHz	11 Mbps
IEEE802.11a	5 GHz	54 Mbps
IEEE802.11g	2.4 GHz	54 Mbps
IEEE802.11n	2.4/5 GHz	135 Mbps

Connection conditions for IEEE802.11n

MCS value 0 to 6 supported

MCS value 7 is working, but performance is not guaranteed.

Band width	Guard interval	Communication speed	
		MCS6	MCS7 (reference value)
20 MHz	800 ns	58.5 Mbps	65.0 Mbps
	400 ns	65.0 Mbps	72.2 Mbps
40 MHz	800 ns	121.5 Mbps	135.0 Mbps
	400 ns	135.0 Mbps	150.0 Mbps

Wireless LAN communication mode

Infrastructure mode

Ad Hoc mode

* IEEE802.11n works only in Infrastructure mode.

Channel for use

Connecting with I EEE802.11b/g/n	1 to 13 channel (when it is connected with IEEE802.11b/g/n) * Access point channel is used in Infrastructure mode. * Channel of communication partner is used if communication partner is [Waiting to be connected] at first in Ad Hoc mode.

	* Setting range is 3 to 11 channel when band width of IEEE802.11n is 40 MHz (regardless of region setting).

SSID

Set 1 to 32 of alphanumeric characters or code (available range of character is 20H to 7EH)

Wireless LAN security

Infrastructure mode

Wireless LAN security	None	
	WEP	
	WPA+WPA2	
	WPA2	
	Dynamic WEP	
WEP	Open System	
	Shared Key	
WEP Key	1 to 4	
WEP Key character string	64bit: 5 ASCII / 10 hex 128bit: 13 ASCII / 26 hex	
WPA＋WPA2、WPA2	PSK	PSK Key 8 to 64 ASCII 64 hex
	Enterprise（802.1x）	EAP Conf
	CCKM	
EAP	FAST	MSCHAP v2
		GTC
		TLS
	LEAP	
	PEAP	MSCHAP v2
		GTC
		TLS
		MD5
		OTP
	TLS	
	TTLS	MSCHAP v2
		MSCHAP
		CHAP
		PAP
		EAP-GTC
		EAP-MD5
		EAP-MSCHAP v2
		EAP-OTP
		EAP-TLS

Ad Hoc mode

None	-
WEP	Open System
	Shared Key
WEP Key	1 to 4
WEP Key character string	64bit: 5 ASCII / 10 hex 128bit: 13 ASCII / 26 hex

Security (authentication method and encryption method combination)

Ad Hoc mode

Security	Authentication
None	-
WEP	Open System
	Shared Key

* IEEE802.11n does not support Ad Hoc mode.

For Infrastructure mode, refer to "Wireless security" described above.

Others

- Supports WPS 2.0 (Wi-Fi Simple Configuration Technical Specification v2.0.0)
- Able to communicate with 6 devices at the maximum in Ad Hoc mode.
- Obtained CCX certificate (Ver4.0), Acquired Wi-Fi® certification
- Supports Wi-Fi Direct

Receive buffer size

2.95 MB

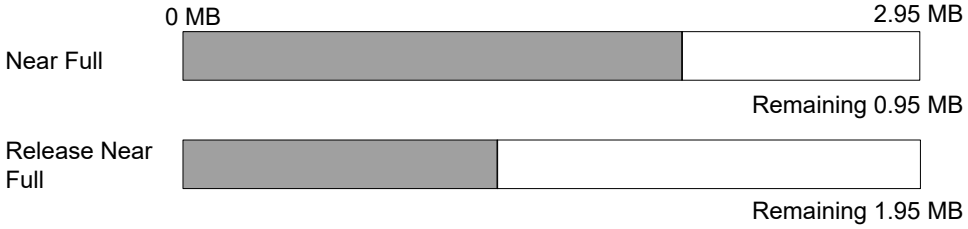

Wireless LAN setting/Display items

Following chart lists configurable and referable sections and variables.

Variable name	Setting range	Initial value [aa] (Factory setting)
Wireless LAN operation mode	Infrastructure / Ad Hoc	Ad Hoc
SSID	1 to 32 digit long characters[*1]	SATO_PRINTER
Hidden SSID	Enabled, Disabled	Enabled
Channel number	1 to 13 * Maximum value varies by destination.	6
Infrastructure mode Network security	None / WEP / WPA2/WPA / WPA2 / Dynamic WEP	None
Ad Hoc mode Network security	WEP / None	None

Variable name	Setting range	Initial value [aa] (Factory setting)
WEP key	Open System / Shared Key	Open System
WEP key 1	Encryption character string of character	NULL
WEP key 2	Encryption character string of character	NULL
WEP key 3	Encryption character string of character	NULL
WEP key 4	Encryption character string of character	NULL
WEP key index	1 to 4	1
WPA authentication	Personal (PSK) / Enterprise (802.1x) / CCKM	Personal (PSK)
PSK	8-63 ASCII or 64 HEX digits	NULL
EAP Mode	FAST / EAP / PEAP / TLS / TTLS	FAST
Inner Method if EAP Mode is FAST	MSCHAPv2 / GTC / TLS	MSCHAPv2
Inner Method if EAP Mode is PEAP	MSCHAPv2 / GTC / MD5 / OTP / TLS	MSCHAPv2
Inner Method if EAP Mode is TTLS	MSCHAPv2 / MSCHAP / CHAP / PAP / EAP-GTC / EAP-MD5 / EAP-MSCHAPv2 / EAP-OTP / EAP-TLS	MSCHAPv2
EAP authentication user name	0 to 63 characters*1	NULL
EAP authentication password	0 to 32 of encryption character	NULL
Anon. Outer ID If EAP is FAST, PEAP or TTLS.	0 to 63 characters*1	NULL
Verify Server Certification If EAP is other than LEAP.	Enabled, Disabled	Enabled
Private Key Password	0 to 64 of encryption character	NULL
PAC Auto Provisioning	Enabled, Disabled	Disabled
PAC Password	0 to 64 of encryption character	NULL

*1 Setting range is HEX 20-7EH.

Software Specifications

Supported protocol: TCP/IP

Network layer: IPv4, IPv6, ICMP

Session layer: TCP, UDP

Application layer: LPR, FTP, DHCP, HTTP/HTTPS, SNMP, NTP

1. LPR, FTP and Dedicated Socket protocol of TCP/IP can be used for sending print data.
2. Status of product can be obtained by dedicated Socket protocol.

Specifications of TCP/IP

TCP/IP protocol environment has LPR and FTP for print. DHCP can be used for setting address.

Specifications of LPR

LPR protocol complies with RFC1179 and handles a list of theoretical printer names as queue name.

The queue name is "lp.”

Send sequence of data file and control file in the job does not affect on print operation when the job is sent by LPR.

* Job deletion is not supported by LPR.

* Specifications of LPR can be used only in Status 4: ENQ response.

* Missing label or duplicated image may occur when many labels are printed by LPR due to the specifications of Windows.

* Banner page print is not supported.

* Multiple sessions cannot be established at the same time.

Specifications of FTP

FTP protocol complies with RFC959. FTP protocol handles the list of theoretical printer names as a transfer directory, and file transfer to this directory executes print operation. Note that it is possible to specify ASCII (A) and BINARY (I) as transfer mode, and mode varies by the client.

The directory name is "lp.”

* Multiple sessions cannot be established at the same time.

* Login users are as follows. (without password)

root

anonymous

lp

NTP（Network Time Protocol）

NTPで本製品内の時刻を補正します。NTP機能が有効にしたときNTPサーバーから現在時刻を取得し本製品内の時刻を補正します。また、RTC（Real Time Clock）カレンダキット搭載時にはRTCカレンダキットの時間を補正します。本機能はLANまたは無線LANインタフェースで動作します。NTPによる時間補正失敗時に「NTPエラー通知機能」が"有効"の場合、エラー画面を表示します。

Specifications of HTTP/HTTPS

This product is configurable by using Web browser.

URL is as follows (Recommended browser: Chrome)

1. Access to this product from Web browser at the following URL.

   https://IP address of this product/

2. Click "Login" from WebConfig screen.

3. Login.

   Username: settings

   Password: 0310

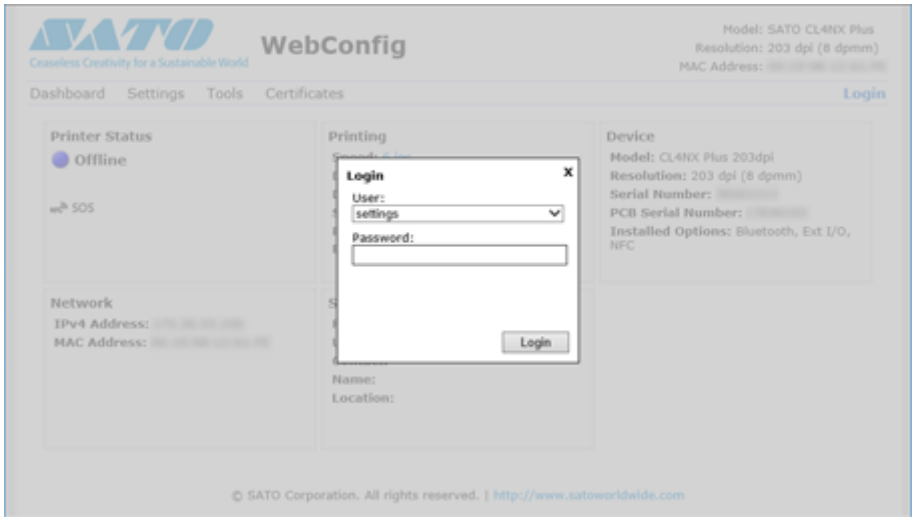

Login has been completed.

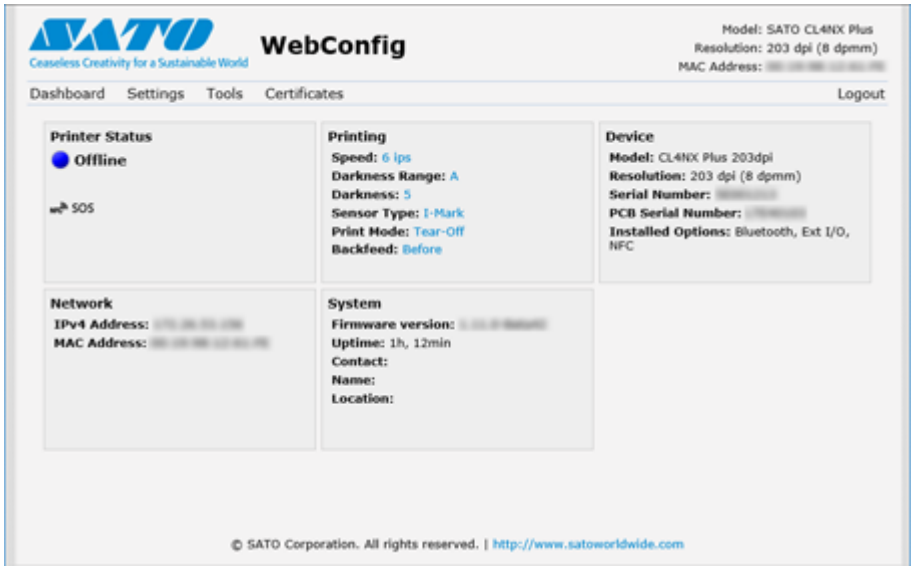
Ceaseless Creativity for a Sustainable World
WebConfig
Model: SATO CL4NX Plus
Resolution: 203 dpi (8 dpmm)
MAC Address:
Dashboard
Settings
Tools
Certificates
Logout
Printer Status
Offline
SOS
Printing
Speed: 6 ips
Darkness Range: A
Darkness: 5
Sensor Type: I-Mark
Print Mode: Tear-Off
Backfeed: Before
Device
Model: CL4NX Plus 203dpi
Resolution: 203 dpi (8 dpmm)
Serial Number:
PCB Serial Number:
Installed Options: Bluetooth, Ext I/O, NFC
Network
IPv4 Address:
MAC Address:
System
Firmware version:
Uptime: 1h, 12min
Contact:
Name:
Location:
© SATO Corporation. All rights reserved. | http://www.satoworldwide.com

Wireless LAN setting

802.1x authentication and certification

Depending on format, certification may be required or may not be required for 802.1x authentication. When certification is required, it is necessary to import it from Web setting screen or USB memory.

Following shows the necessity of certifications, ID and password of each format for 802.1 authentication followed by the types of certifications and secret keys.

■ Items to be imported from Web setting screen and USB memory

No.	Items to be imported	Contents
1	Root certificate	File: Select a file of root certificate
2	Client certificate	Password: Enter secret password of client certificate File: File of client certificate
3	Private Key	Password: Enter password of private key File: Select file of private key
4	PAC file	Password: Enter password of PAC file File: Select PAC file

■ Necessity of ID/Password, certifications of each format for 802.1x authentication

EAP format	Necessary information (○: Necessary, ×: Unnecessary)						
	User name	Password	Certification Password	Root certificate	Client certificate	Private Key	PAC file
EAP-TLS	○	×	○	○	○	○	×
EAP-PEAP	○	○	×	○	×	×	×
EAP-LEAP	○	○	×	×	×	×	×
EAP-TTLS	○	○	×	○	×	×	×
EAP-FAST	○	○	×	×	×	×	○

Socket Communication

In the socket server of TCP/IP, Port1 is used for print data reception, Port 2 is used for 2-port connection of printer status return, and Port 3 is used for 1-port connection for both receiving print data and printer status return.

When Port3 is used, only status return data and printer operation setting request data are returned to host.

It is not possible to use 2 port connection and 1 port connection at the same time.

It is not possible to have few sessions connected at once to each Socket.

Besides Socket, it is possible to use LPR and FTP for sending print data. It is not allowed to connect to print data port (Port 1 or Port 3) while LRP and/or FTP is connected due to Socket communication.

Please do not use 2 ports connections consist of Port 2 port and Port 3 port.

1. Print by 2 port connection/Socket (Status4)

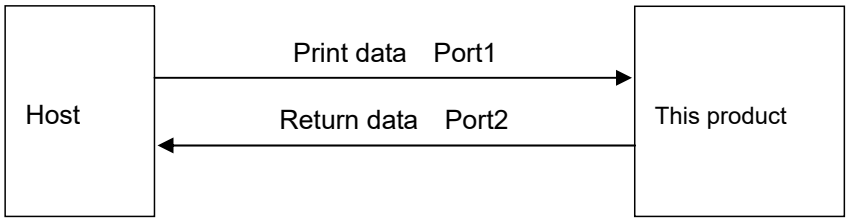

2. Print by 1 port connection/Socket (Status4)

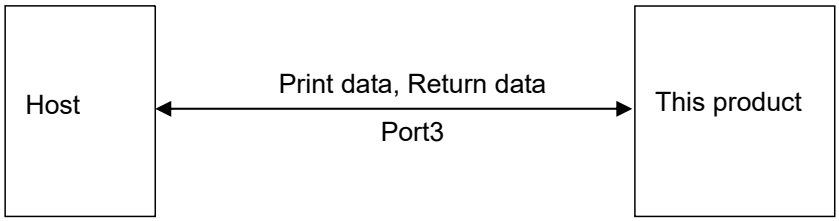

3. Print by 1 port connection/Socket (Return status3, 5)

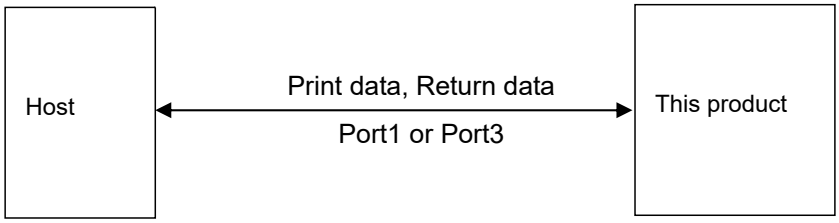

4. Print with LPR and FTP

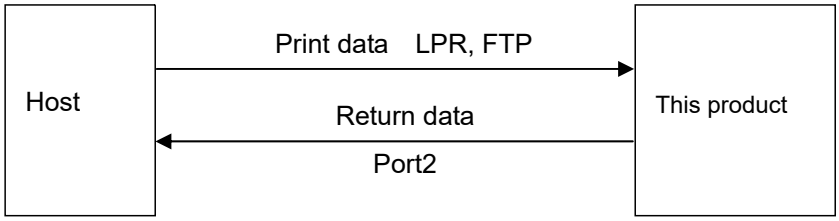

Connection and Disconnection of Session

Following is the procedure for connection and disconnection of Port 1 (for print data) and Port 2 (for status return) and Port 3 or Port 1 (for send/return port) in socket server functions.

Print data port (Port1), Status return port (Port2)

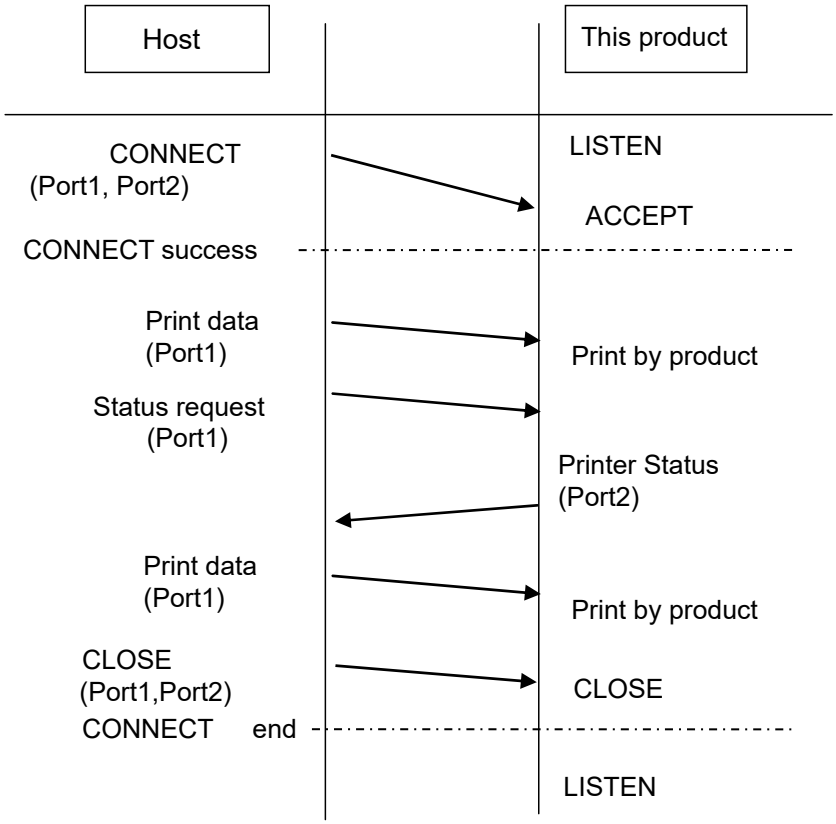

Sent/Received port (Port3 or Port1)

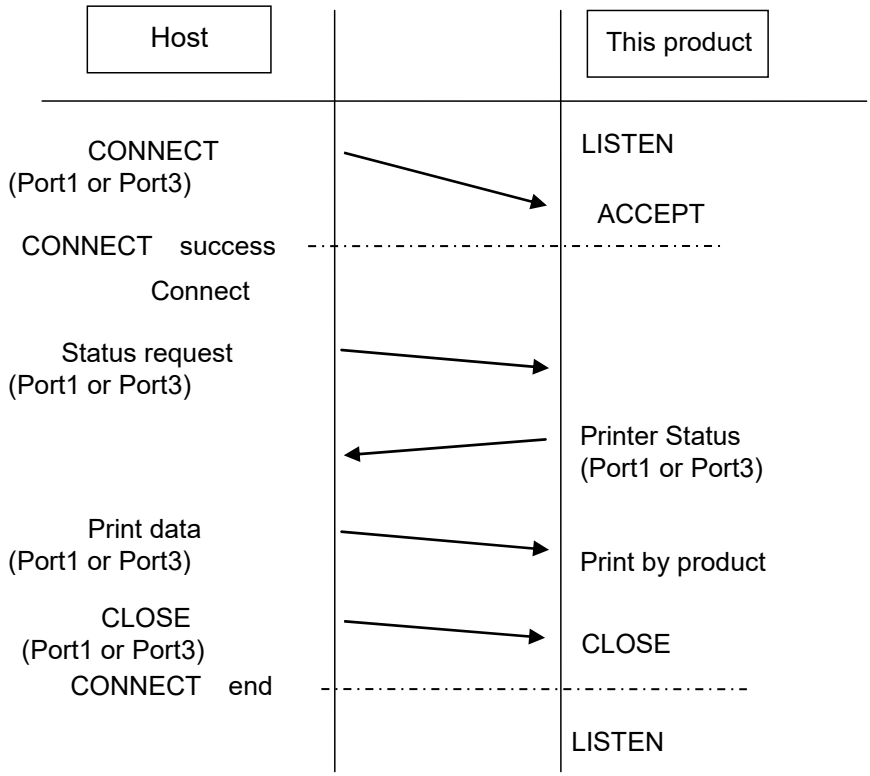

TCP Connection Queue

TCP connection queue functionality allows the printer to return an acknowledgment response (ACK) to a connection request (SYN) from another host while the printer is connected to one host.

Note: For connection with one host, this function prevents the printer from returning a forced disconnection (RST) to the host if the printer receives the next connection request (SYN) ahead in case a process of connection termination (FIN) is delayed by network delay.

TCP connection queue: Disabled

While connected to one host, the printer returns a forced disconnection (RST) to a connection request (SYN) from another host.

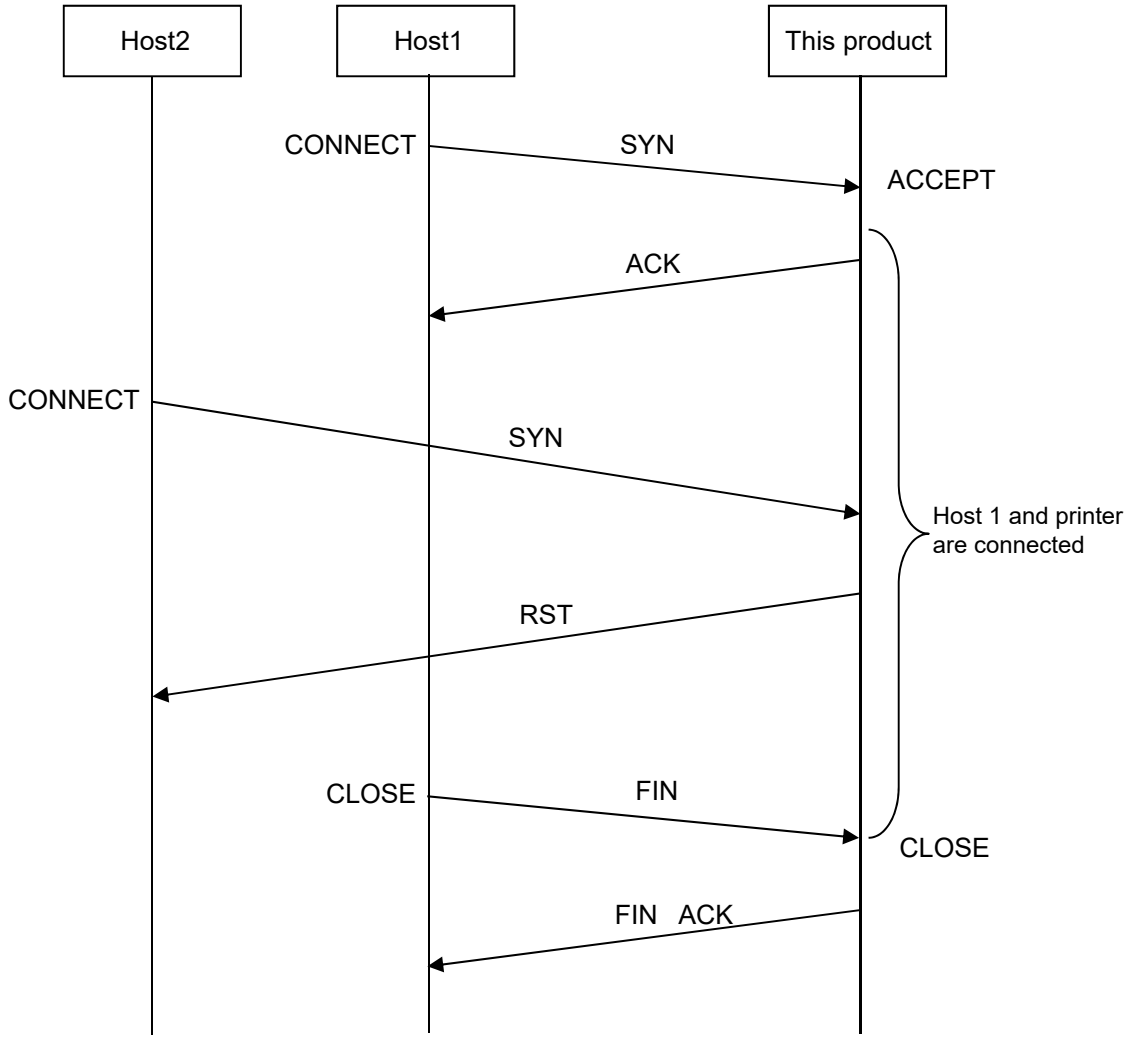

TCP connection queue: Enabled

While connected to one host, the printer returns an acknowledgment response (ACK) to a connection request (SYN) from another host.

* Only 1 port connection of Status 3, 4, 5 is supported when TCP connection queue is enabled.

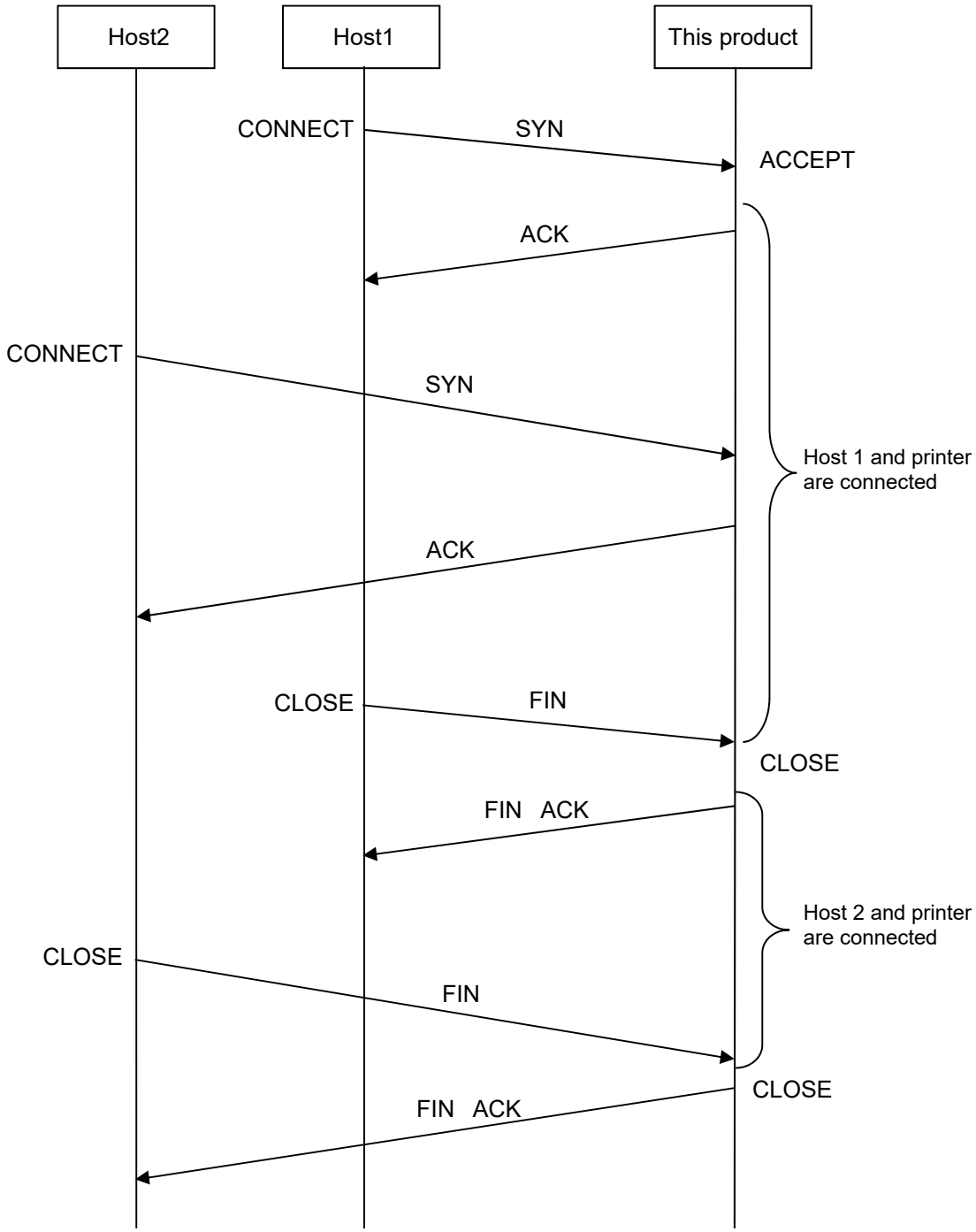
Host2
Host1
This product
CONNECT
SYN
ACCEPT
ACK
CONNECT
SYN
Host 1 and printer
are connected
ACK
CLOSE
FIN
CLOSE
FIN ACK
Host 2 and printer
are connected
CLOSE
FIN
CLOSE
FIN ACK

Printer Status

Status Mode

There are three types of mode for status return when using LAN interface.

Status4/Cycle response mode (2port connection or 1 port connection)

Port1 is used for print data port, Port2 is used for status return, Port3 is used for print data port and status return.

Printer status is output at certain period (500 to 1000 ms interval). Printer Status is returned when this product receives status request command from host.

Status4/ENQ response mode (2port connection or 1 port connection)

Port1 is used for print data port, Port2 is used for status return, Port3 is used for print data port and status return.

Printer Status is returned when this product receives status request command from host.

Status3, Status5/ENQ response mode (1 port connection)

Port1 is used for both print data port and status return port. Port3 is used for both print data port and status return port.

ACK is returned when this product receives print request command from host, and Printer Status is returned when this product receives status request command from host.

When the Status3 is used, label printing using a printer driver is unavailable.

Status modes are switched by changing the setting of communication protocol and timing of Printer Status return in communication setting mode of this product. Following chart shows the relationship between the types of status mode, setting items of communication setting mode.

Types of status mode	Setting item of communication setting mode
	Communication protocol (Flow Control)
2 ports connection Cycle response mode	Status 4 cyclic (Status4)
2 ports connection ENQ response mode	Status 4 ENQ (Status4 ENQ)
1 ports connection ENQ response mode	Status 3 (Status3) Status 5 (Status5)

Data Format of Status Return

2 ports connection (Status4 return)

Number of byte to send 4 bytes 0000001CH	ENQ 1 byte 05H	STX 1 byte 02H	ID number 2 bytes	Status 1 byte	Remaining labels 6 bytes	JOB name 16 bytes	ETX 1 byte 03H

(Total 32 bytes)

Please refer to [Return status of Status4] for the description of [Status].

1 port connection (Status5 return)

STX 1byte 02H	Specified item No. 5 byte	Specified item status 2 bytes	Currently processing item No 5 bytes	Currently processing item status 2 bytes	Number of currently processing item to be printed 6 bytes	ETX 03H 1 byte

（Total 22bytes）

Please refer to [Return status of Status5] for the description of [Status].

1 port connection (Status3 return)

STX 1 byte 02H	ID number 2 bytes	Status 1 byte	Remaining labels 6 bytes	ETX 1byte 03H

(Total 11 bytes)

Please refer to [Return status of Status3] for the description of [Status].

Sequence

Status4/Cycle response mode (2 ports connection or 1 port connection)

This product returns status in the interval of 500 to 1000 ms. The latest Printer Status is returned when this product receives status request command (ENQ:05H) from host.

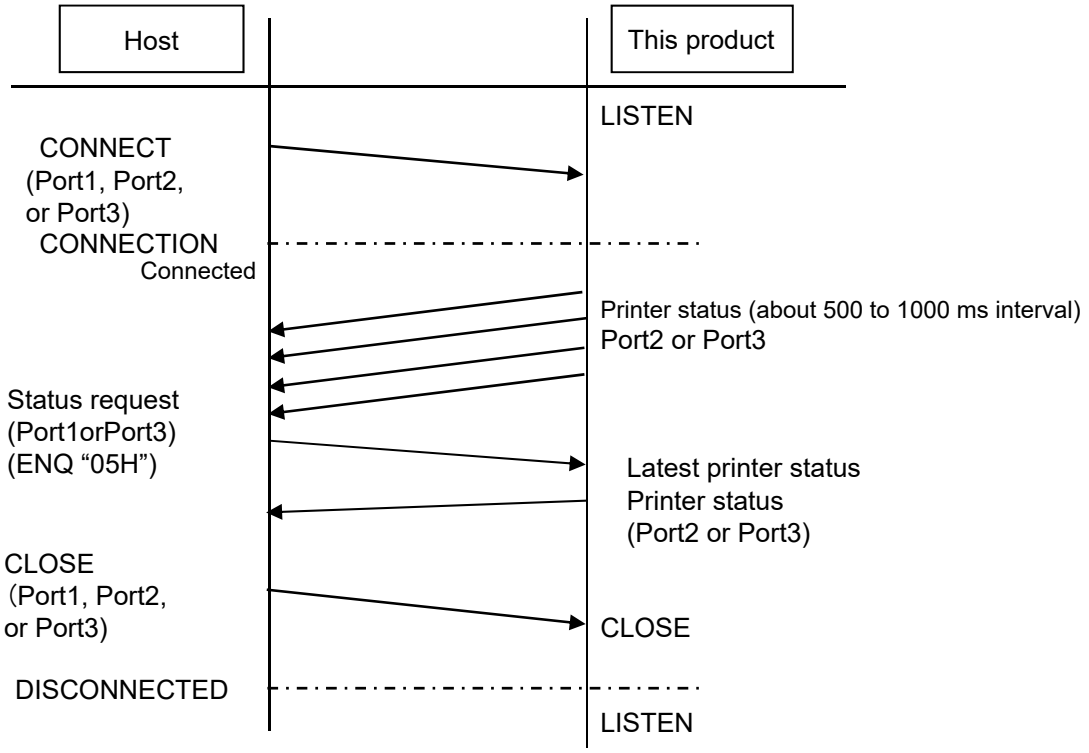

Status4/ENQ response mode (2 ports connection or 1 port connection)

The latest Printer Status is returned after this product receives status request command (ENQ:05H) from host.

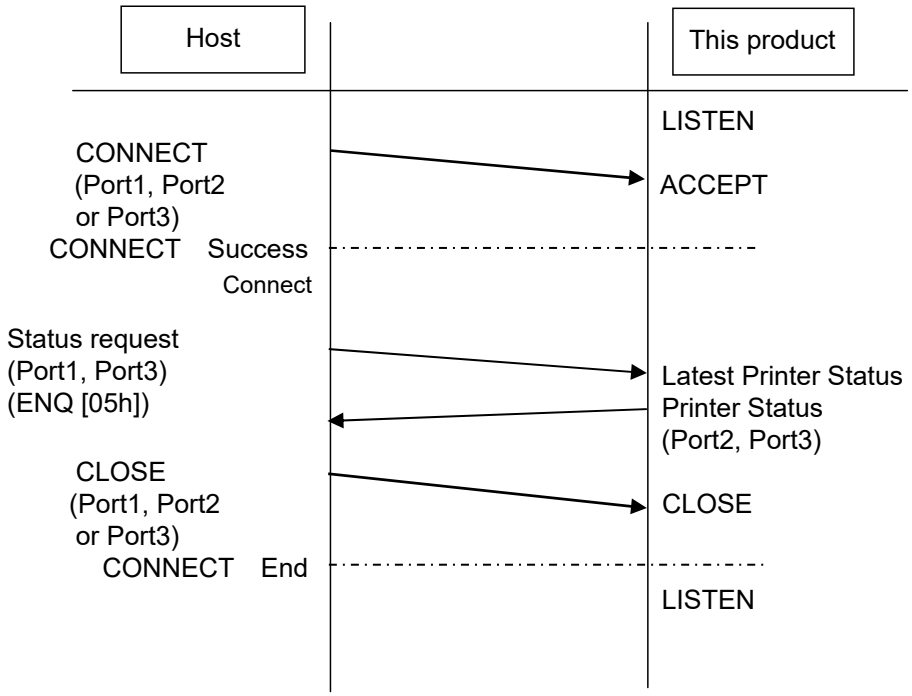

Status3, Status5/ENQ response mode (1 port connection)

This product sends ACK after receiving print request command from host and sends Printer Status after receiving status request command (ENQ:05H) from host.

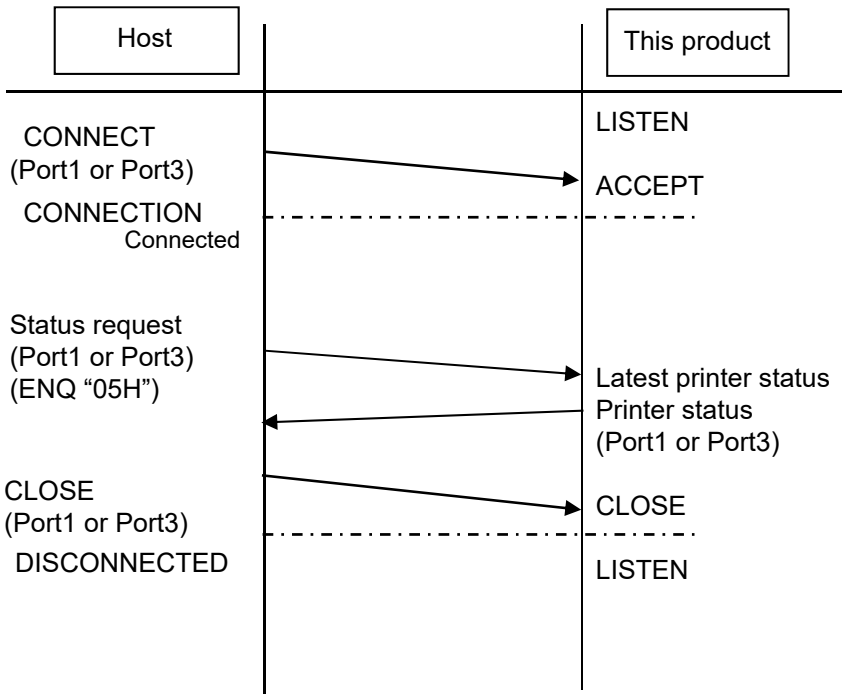

Switching LAN and WLAN

This feature switches LAN and WLAN so that LAN can be used while the WLAN unit is connected.

Select the interface from Interface > Network > Interface on LCD.

There are three options to select from as below.

Item name	Description
AUTO	LAN is enabled when LAN cable is connected at printer startup. WLAN will be enabled if the product detects that LAN cable is not connected.
LAN	Enables LAN and disables WLAN.
Wi-Fi	Enables WLAN and disables LAN.

If the settings are changed, they will be enabled after restarting this product.

It is also possible to implement from DC2 command separately from LCD.

[Restrictions]

- The settings will automatically be switched to “AUTO” if you start up the printer after detaching the WLAN unit with the settings set to “Wi-Fi.”

Firewall

Firewall function

Firewall can improve the security. It prevents an unauthorized access from external computers and malicious programs. When firewall is enabled, only the services and ports which are allowed will be able to access.

This firewall function uses the packet filtering setting function to control the communication in this product. It will control communication network of this product separately for each chain (INPUT, OUTPUT, FORWARD). As the basic policy of filtering, OUTPUT is all allowed (ACCEPT), INPUT and FORWARD are all disallowed (DROP). The customize setting can be done in INPUT chain to allow the communication for the necessary packet. In addition to registering services and ports, it is also possible to specify allowed port individually. Protocol (TCP or UDP, etc.), direction (source port or destination port) and port number are required for specify allowed port setting. For PING, ICMP type must be specified.

Allowed services and ports setting

This below table shows the packet filtering setting for each Allowed services and port setting.

Allowed services and ports	TCP Source Port	TCP Destination Port	UDP Source Port	UDP Destination Port	ICMP
Data Ports *1	-	1024, 1025, 9100	-	-	-
FTP	-	20, 21	-	-	-
LPD	-	515	53	-	-
MAILC	465, 587	-	53	-	-
NTP	-	-	53, 123	-	-
Online Services *1	443, 8883	-	53	-	-
PING	-	-	-	-	0, 8
SATO All-In-One Tool	-	9100	-	161, 19541	-
SCP	22	-	53	-	-
SNMP Agent	-	-	-	161	-
WEBC	80, 443, 8080	-	53	-	-
WebConfig	-	80, 443	-	-	-

*1 The setting which was showed in the table is initial setting. It may be changed due to other setting.

Online services	TCP Source Port	TCP Destination Port	UDP Source Port	UDP Destination Port	ICMP
Disable	-	-	-	-	-
On-Demand	-	-	-	-	-
Real-Time with MQTT	443, 8883	515	53	-	-
Real-Time with MQTT over WebSocket	443	-	53	-	-

Online services	TCP Source Port	TCP Destination Port	UDP Source Port	UDP Destination Port	ICMP
Light	443	-	53	-	-

Notes

Common with LAN /Wireless LAN interface

- 150 ms to 200 ms interval is required to close port then open port, if you want to open and close print data port (Port 1), status port (Port 2) and send/received port (Port 3). Short interval setting may cause double connection. Request for double connection occurs when [CONNECT] request is made to Port (Port1, Port2 or Port3) in addition to the request [CONNECT (Socket OPEN)] which has already been made to Port (Port1, Port2 or Port3). When printer receives request for double connection, it sends response of disconnection (Socket CLOSE) to the request.

Wireless LAN interface

- Communication distance and transmission rate between host and this product (Wireless LAN board) varies by operating environment due to operating conditions of Wireless LAN.
- It is recommended to use it in Infrastructure mode on the condition that display of field intensity of Wireless LAN is level3 or above (following chart).

- It is likely that communication data is lost if environment of Wireless LAN is not appropriate because Wireless LAN is portable or due to ambient conditions.
- Please set frequency of channel for each group to every [5 channel] or more than 5 channels if you want to place few Wireless LAN network groups next to each other.

  Ex) When channel of group1 is [1], channel of group 2 shall be set to [6] channel or after.

LAN Interface

Communication may not be established if you plug in/out LAN cable while PC is connected. Do not plug in/out LAN cable while starting up printer. When LAN cable is removed/inserted and it caused communication loss, please turn on the power of this product again.

Bluetooth

Bluetooth interface of this printer complies with Bluetooth Ver. 3.0 standard.

Basic Specifications

Standard

Bluetooth Ver. 3.0+EDR Power Class 2

Communication distance

10 m (Prescribed measurement environment)

Profile for use

Serial Port Profile (SPP)

SPP defines connection of two Bluetooth supported devices by establishing virtual serial port.

Operation mode

Master/Slave mode

Security level

Level 1: No authentication

Level 2-1: PIN code authentication, Service level, No encryption

Level 2-2: PIN code authentication, Service level, Encryption

Level 3: PIN code authentication, Link level, No encryption

Level 4: Support for secure simple pairing, Service level, Encryption

Initial value: No authentication

PIN code

ASCII code in 0 to 16 digits (20H, 21H, 23H to 7EH)

Initial value: 0000

Device name

ASCII code in 0 to 53 digits (20H, 21H, 23H to 7EH)

Initial value: SATO PRINTER_xxxxxxxxxxxx (xxxxxxxxxxxx is BD address)

Power saving mode

sniff, park, hold (Operate according to host setting)

Setting of CRC (Enabled/Disabled)

Enabled, Disabled

Initial value: Disabled

Disconnection timeout period (SPP layer)

0 seconds (Initial value)

Disconnection timeout period (LMP layer)

60 seconds (Initial value)

Parameter

Setting item	Setting range
Protocol	Status3 Status4 (initial value) none

Receive buffer size

2.95 MB

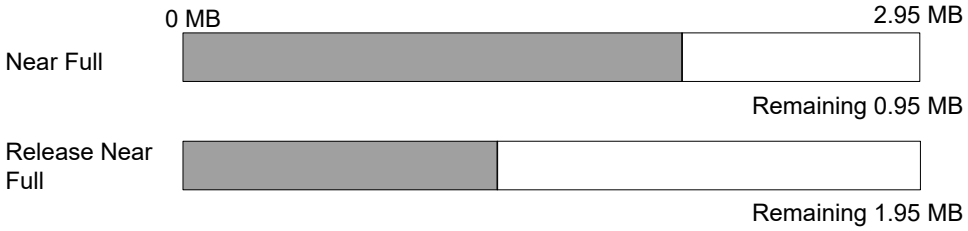

Pairing

Keep link keys for 10 devices

CoD (Class of Device)

Major service class: Unspecified

Major device class: Imaging major class

Minor device class: Printer

supervision timeout

Initial value=20 seconds (Changeable from host)

[Supplementary Explanation]

- This product operates in slave mode. Before establishing connection, specify Bluetooth Device address (BD address) from the master.
- Connection may not be established when master's authentication mode, packet type, and PIN code are different from above setting. In that case, confirm authentication level and PIN code by [Tools] menu > [Test Print] > [Configure List] in [Settings] menu, match with master setting and try reconnection.
- Bluetooth interface and this product is connected by internal serial interface, and transfer speed is 115200 bps.
- When Bluetooth LINK is lost (e.g. out of service area), disconnects from the product after supervision timeout period has passed.
- When Bluetooth communication is disconnected while sending print data (STX<A> to <Z>ETX), the received data is discarded after disconnection time-out period has passed. It is required to resend print data (STX<A> to <Z>ETX) when time out occurs. Time out is not monitored if disconnection time out period is set to 0.

- Buffer over occurs if this product has full of receive buffer. Please send ENQ then send print data as checking the status of receive buffer.
- ACK/NAK is returned when CRC check result is normal and CRC check is valid.

Bluetooth Settings

Following items are available for Bluetooth interface setting.

Authentication level (Level1, Level2-1, Level 2-2, Level 3, Level 4)

PIN code (Alphanumeric character and codes (20H, 21H, 23H to 7EH) 1 to 16 digits)

PIN code (Personal Identification Number, Pass-key) consists of 1 to 16 codes and is an authentication password to be used for identifying this product. This PIN code is required for authentication level 2 to 4. When paring starts in this product after authentication with PIN code, link key will be automatically generated. Once link key is generated, it is no longer necessary to perform authentication with PIN code so that it is possible to establish connection during paring without confirmation of PIN code.

Bluetooth specification Ver 3.0 module supports FastConnect. Information on pairing for 10 devices is saved under this product. When pairing is performed for 10 devices or more, this product will delete the oldest information on paring then will save the information on paring of new connected device. (Information on paring will not be cleared by Factory Clear.)

Communication parameter (ISI, ISW, PSI, PSW)

Bluetooth module has setting values of ISI, ISW, PSI, PSW, and the details are described in the list below.

Setting	Contents
ISI (Inquiry Scan Interval)	ISW time interval (0,18 to 4096) (every 0.625 ms)
ISW (Inquiry Scan Window)	Response time for search request from the host (0, 17 to 4096) (every 0.625 ms)
PSI (Page Scan Interval)	PSW time interval (18 to 4096) (every 0.625 ms)
PSW (Page Scan Window)	Response time for connection request from the host (17 to 4096) (every 0.625 ms)

- When ISI=0 and ISW=0, device search from master device can be rejected.
- Initial values of factory clear are ISI=2048 (1.28 sec), ISW=18 (11.25 ms), PSI=2048 (1.28 sec.), and PSW=18 (11.25 ms).
- It is prohibited to set as ISI<ISW nor PSI<PSW.
- Normally communication parameter does not need to be changed. However it needs to be adjusted when the radio wave signals are low.

Device name (Alphanumeric character and codes (20H, 21H, 23H to 7EH) 1 to 20 digits)

Any device name can be set and displayed on connected device to identify the product.

Note

- Initialized communication parameter is set to Bluetooth interface as turning on the power of this product for the first time after it was set. Do not turn off the power of this product until the product is booted normally for reboot.

CRC Transmission Data

When CRC check mode is selected, transmit data format needs to be configured as follows.

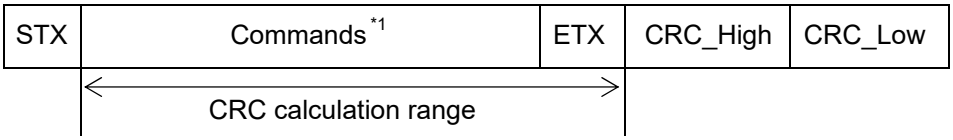

Item	HEX (H)	Contents
STX	02	Transmission control character to start text
Commands	-	Commands+Parameter
ETX	03	Transmission control character to end text
CRC	2 bytes	Calculate by computation method called CRC-ANSI. Sends High first then Low with error control value calculated by CRC-16 (generating polynomial $X^{16}+X^{15}+X^{2}+1$ *2)

- Start Code <A> and Stop Code <Z> shall be set to the command.

  STX and ETX must to be set in transmission data. When this product cannot receive STX or ETX, print operation is not executed.

- Since it is a right shift, the actual value used for calculation will be 0xA001. Initial value is 0.

CRC Calculation Data

Following shows a part of CRC calculation process when sending print speed <CS> as an example.

Transmission data is STX <A> <CS>2 <Z> ETX. This will be "02 1B 41 1B 43 53 32 1B 5A 03" in HEX, and underlined area is CRC calculation range. Generating polynomial is expressed "1010 0000 0000 0001" as binary numbers. 1B is the first object of calculation and it is expressed "0001 1011" as binary numbers. Initial value of CRC is "0."

(1) CRC = CRC XOR Object data(1B)	0000 0000 0000 0000 (CRC) XOR) 0000 0000 0001 1011 (1B) CRC = 0000 0000 0001 1011
(1-1) A=CRC AND "0001" CRC= shift 1bit right of CRC	A = 1 CRC = 0000 0000 0000 1101
(1-2) If A=1, CRC XOR Generating polynomial, and assign the result to CRC. If A=0, do nothing	0000 0000 0000 1101 (CRC) XOR) 1010 0000 0000 0001 (Polynomial) CRC = 1010 0000 0000 1100
(2-1) Calculate the same as (1-1), and repeat (1-1) and (1-2) calculation seven times. (8bits in total)	A = 0 CRC = 0101 0000 0000 0110
(2-2) Calculate the same as (1-2). CRC is as it is since A=0.	CRC = 0101 0000 0000 0110
(3-1) Calculation the same as (1-1).	A = 0 CRC = 0010 1000 0000 0011
(3-2) Calculate the same as (1-2).	CRC = 0010 1000 0000 0011
(4-1) Calculation the same as (1-1).	A = 1 CRC = 0001 0100 0000 0001
(4-2)Calculate the same as (1-2).	0001 0100 0000 0001 (CRC) XOR) 1010 0000 0000 0001 (Polynomial) CRC = 1011 0100 0000 0000
(5-1) Calculate the same as (1-1).	A = 0 CRC = 0101 1010 0000 0000
(5-2) Calculate the same as (1-2).	CRC = 0101 1010 0000 0000
(6-1) Calculate the same as (1-1).	A = 0 CRC = 0010 1101 0000 0000
(6-2) Calculate the same as (1-2).	CRC = 0010 1101 0000 0000
(7-1) Calculate the same as (1-1).	A = 0 CRC = 0001 0110 1000 0000
(7-2) Calculate the same as (1-2).	CRC = 0001 0110 1000 0000
(8-1) Calculate the same as (1-1).	A = 0 CRC = 0000 1011 0100 0000
(8-2) Calculate the same as (1-2).	CRC = 0000 1011 0100 0000
CRC calculation for "1B" is completed. Repeat the same calculation of (1) for next object data "41" until "03." In this case EC 5E.	Calculation result until 03 CRC = 1110 1100 0101 1110

Example of Transmission Data

Following shows an example of transmission data.

Print data

STX
<A>
<X22>,SATO
<Q>0001
<Z>
ETX
71H 9CH

Following shows HEX data to be sent. CRC is shown with underline.

02 1B 41 1B 58 32 32 2C 53 41 54 4F 1B 51 30 30 30 31 1B 5A 03 <u>71 9C</u>

Print speed Command <CS>

STX
<A>
<CS>2
<Z>
ETX
ECH 5EH

Following shows HEX data to be sent. CRC is shown with underline.

02 1B 41 1B 43 53 32 1B 5A 03 <u>EC 5E</u>

CRC Error Display

This product checks the validity of receiving data by calculating CRC per data item being received and compares it with sent CRC. When those CRC are different, this product judges that receiving data is incorrect and causes [CRC error] before printing the item then stops printing operation.

There are two ways to clear CRC error as follows.

Hold down LINE key

Resumes printing from the print data with CRC error.

Hold down Cancel key

Clears print data with CRC error and resume printing from next item.

[Supplementary Explanation]

- Return status of Status3, 4 at the time of CRC error will be [Other errors].

Transmission Sequence

Normal End

Status4 (CRC check is enabled)

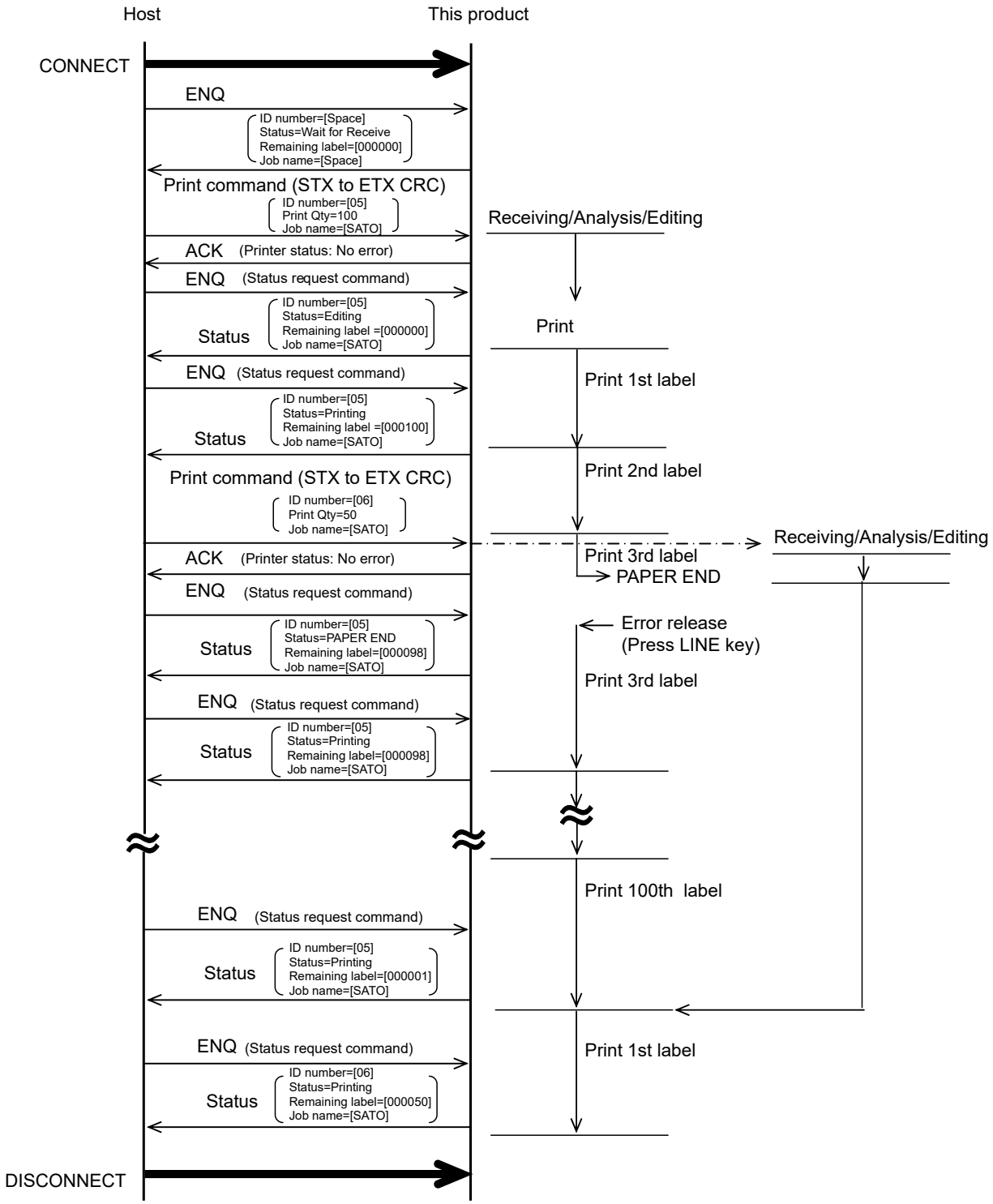

Status3 (CRC check is enabled)

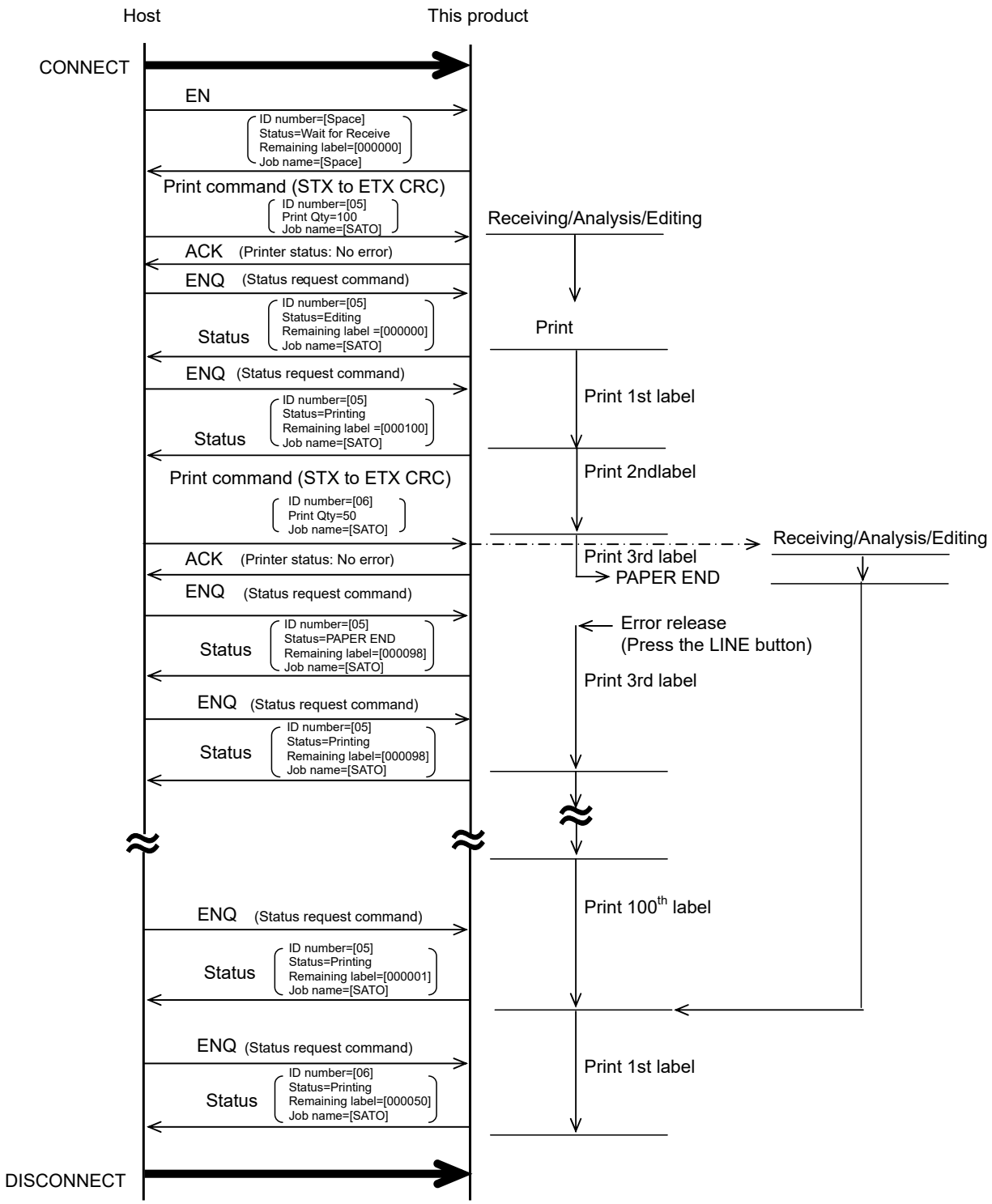

Status4 (CRC check is disabled)

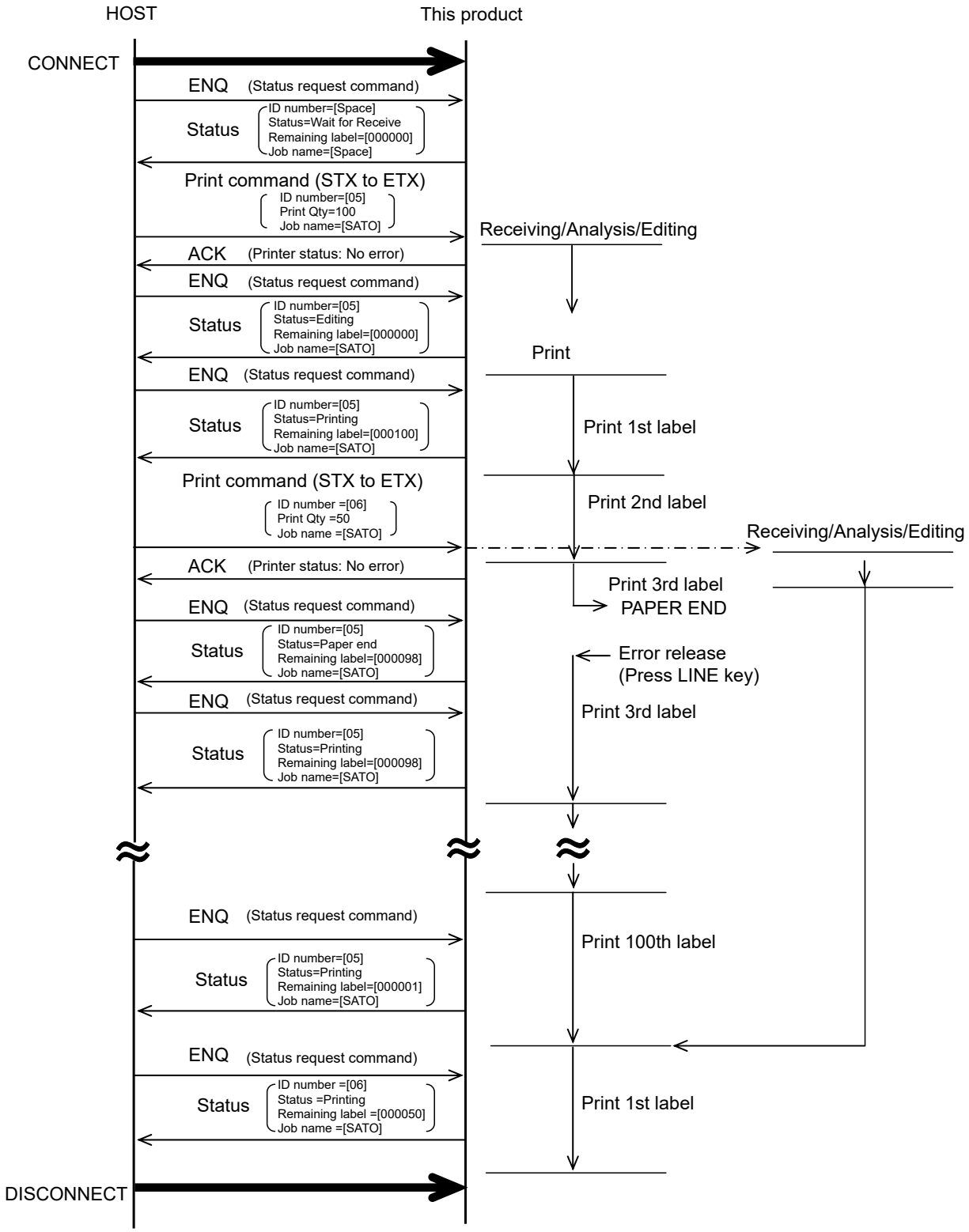

Status3 (CRC check is disabled)

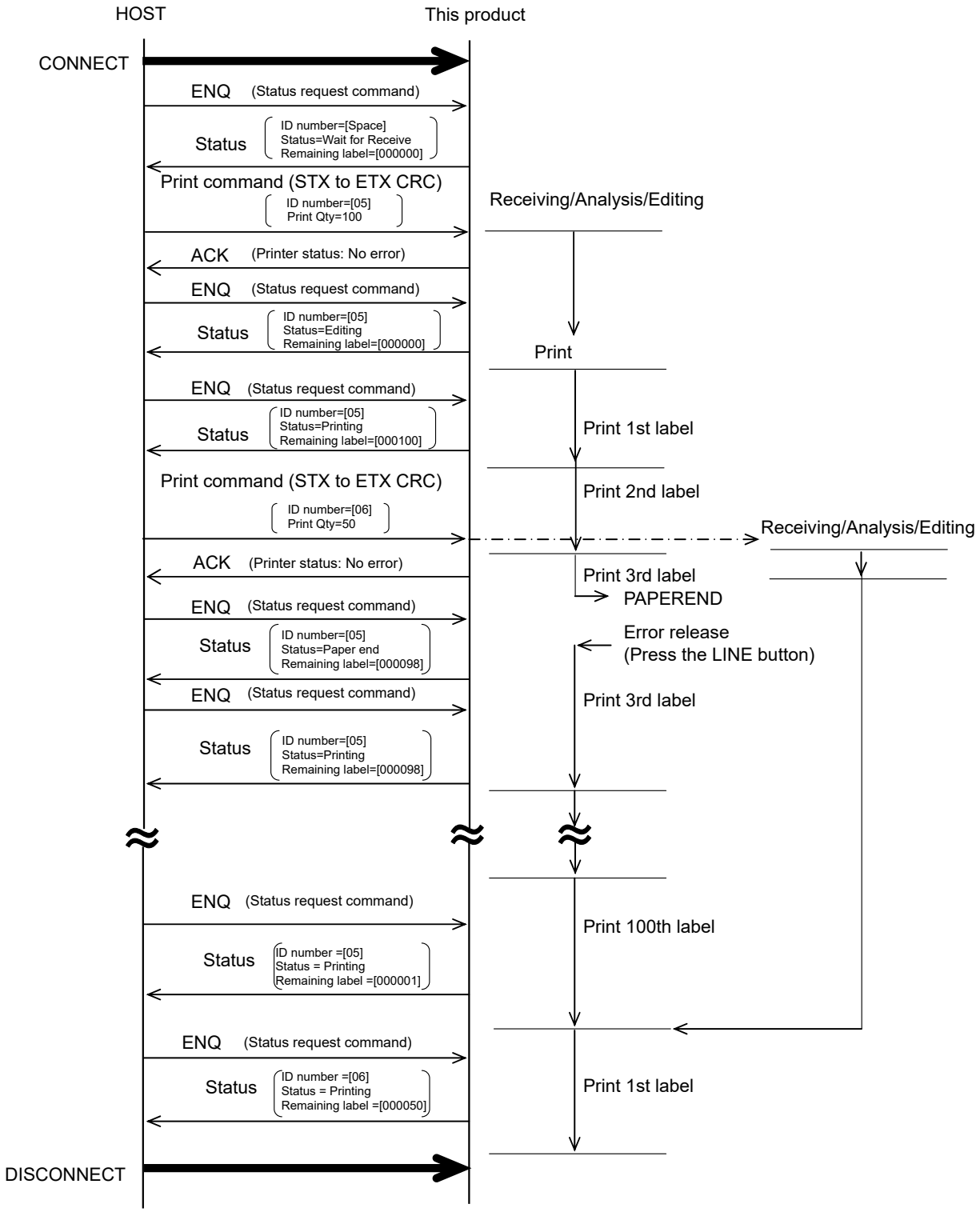

In case where communication is lost while transferring print data

Note

- The print data cannot be guaranteed if communication through Bluetooth is disconnected while sending print data.

  Make sure to turn off the power of this product, then turn on it again to retransmit the print data.

CRC check is enabled (Common in status3 and status4)

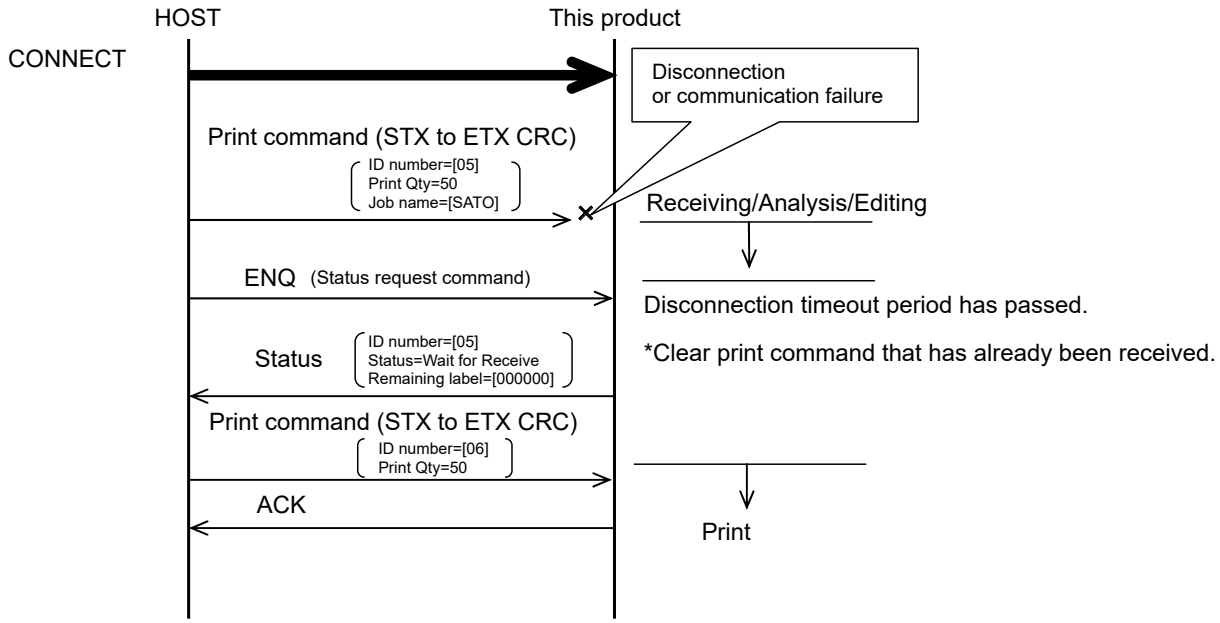

Note

- In case where communication through Bluetooth is disconnected while transmitting print data, print data that has already been received, will be cleared after disconnection timeout period.

CRC check is disabled (Common in status3 and status4)

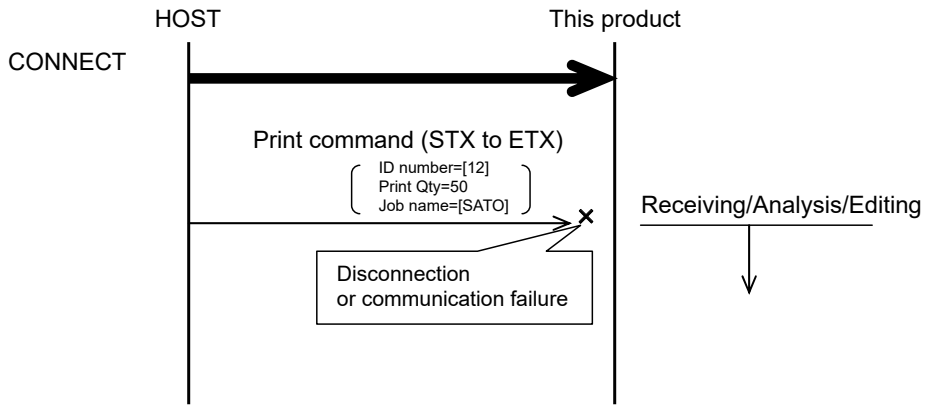

Note

- The print data cannot be guaranteed if communication through Bluetooth is disconnected while sending print data as in the figure above. Make sure to turn off the power of this product, then turn on it again to retransmit the print data.

In case where communication is lost while transferring status after receiving print data

CRC check is enabled (Common in status3 and status4)

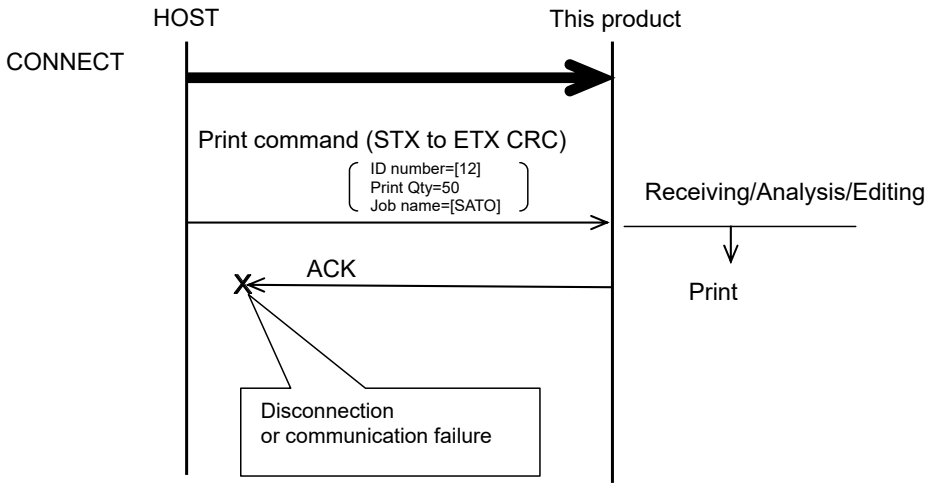

Note

- When ACK is not returned after sending print data, it shall be regarded as communication failure and sending print data has to be stopped.
- ACK may not return when communication through Bluetooth is disconnected before this product returns ACK.

CRC check is disabled (Common in status3 and status4)

Works the same as the previously mentioned "CRC check is enabled (Common in status3 and status4).”

Abnormal end when CRC check is enabled

In the event of CRC error (Common in status3 and status4)

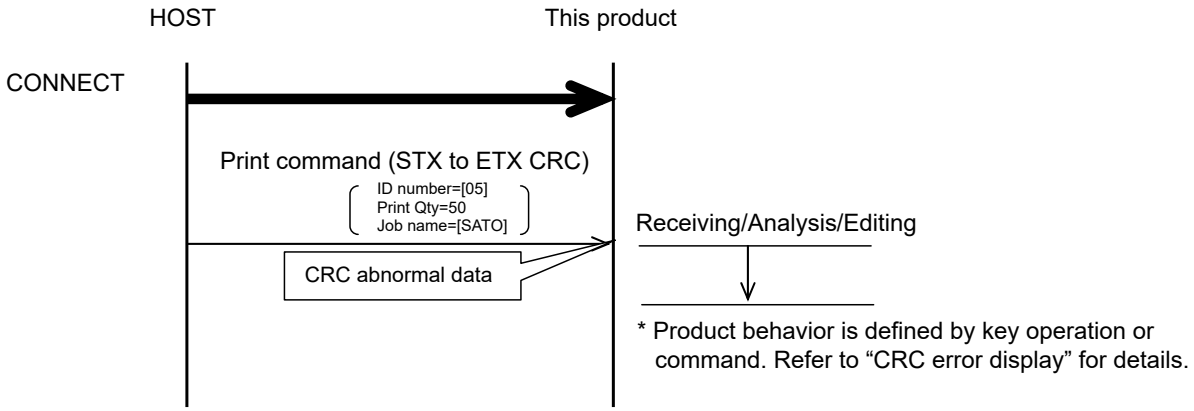

Note

- Received data is cleared and ACK/NAK is not returned when the received printer data has CRC error.

In the event of disconnection time-out (Common in status3 and status4)

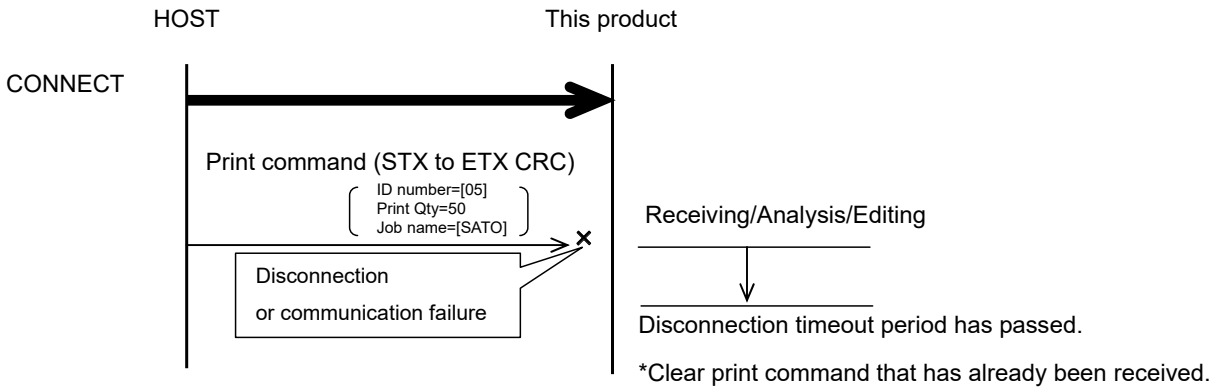

Note

- In case where receive data is not available in communication time-out period (10 sec) while receiving print command, time-out occurs to clear print data that has already been received (ACK/NAK is not returned).

External signal interface

Basic Specifications

External signal interface is designed to connect the printer to external peripheral devices.

External signal interface works only in pulse input mode (print by external signal input). Error signal is output in any mode if an error occurs in the printer.

External signal setting is set in the [Interface] > [External I/O] of this product.

Connector

Amphenol 14 pin receptacle (female)

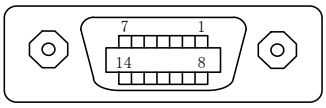

For connector, use DDK's 57 series 14-pin (57-30130 etc.) or the like.

I/O Circuit Diagram

14pin type

I/O connection example

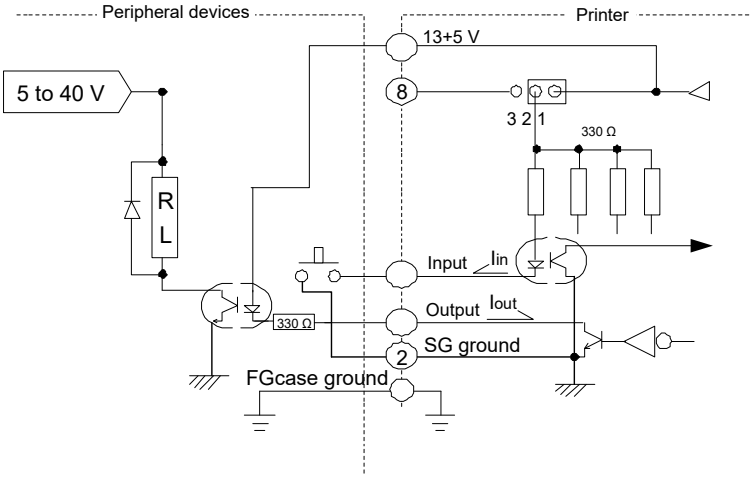

Signal Level

High +4.2 - 5 V: Input terminal: Iin≒0 mA, Output terminal: Iout≒0 mA

Low 0 - 0.7 V or less: Input terminal Iin≒10 mA Output terminal Iout≒50 mA

Print by External Signal

Set "ENABLE/DISABLE" in the [Interface] > [External I/O].

Reissuing EXT Signal

Following signal types are available in the [Interface] > [External I/O] > [Signals] > [EXT Mode].

Type	Operation
TYPE Ⅰ	Print end signal (PREND) is “High” before printing labels. The signal level is “Low” after the completion of print. The signal level will be “High” 20 ms later.
TYPE Ⅱ	Print end signal (PREND) is “Low” before printing labels. The signal level is “High” after the completion of print. The signal level will be “Low” 20 ms later.
TYPE Ⅲ	Print end signal (PREND) is "High" before printing labels. The signal level is "Low" from the start to the end of print and will be "High" after the completion of print.
TYPE Ⅳ	Print end signal (PREND) is "Low" before printing labels. The signal level is "High" from the start to the end of print and will be "Low" after the completion of print.

Reissuing EXT Signal

Set "Enable/Disable" in the [Interface] > [External I/O].

Enable: Reprint the same content

Disable: No reprint

Dispenser Completion Signal

Sets pin number for dispenser completion signal in [Interface] > [External I/O] > [Signals] > [Outputs] settings.

When pin no. is set: Outputs dispenser completion signal when dispenser motion is completed. (Sets signal level to Low)

When set, it works with the sequence of dispenser completion signal.

When pin number is not set: Dispenser completion signal state won’t change while waiting for dispenser motion to complete.

Label Near End

Sets pin number for dispenser completion signal in [Interface] > [External I/O] > [Signals] > [Outputs] settings.

When pin No. is set: Outputs label near end when detected label near end. (Sets signal level to Low)

When pin number is not set: Label near end state will not change while for label near end.

Connector Pin Assignment

14 pin external signal interface

Pin no.	Signal name	Contents	Input/Output	Level	Electric condition (voltage, current (MAX))
1	PAPER END	Output when paper end is detected.	Open collector	Low	Pressure proof 50 V Sink current 50 mA
2	GND	SIGNAL GROUND	-	-	-
3	RIBBON END	Output when detect ribbon end.	Open collector	Low	Pressure proof 50 V Sink current 50 mA
4	MACHINE ERROR	Output when Head open, Head error or communication error occurs.	Open collector	Low	Pressure proof 50V Sink current 50mA
5	Print start (PRIN)	Print one label every time when this signal is input.	Input	Low	High: Hi-impedance Low: -15 mA<, 0 V
6	Print end (PREND)[*1] [*2]	Output when this product prints one label.	Open collector	Low	Pressure proof 50V Sink current 50 mA
7	Re-print (PRIN2)	Print the same content again by input this signal.	Input	Low	High: Hi-impedance Low: -15 mA<, 0 V
8	EXT5V_IN[*3]	For external power supply	Input	-	5 V
9	Offline[*4]	Output when this product becomes offline.	Open collector	Low	Pressure proof 50V Sink current 50 mA
10	RIBBON NEAR END	Output when detecting ribbon is near end.	Open collector	High	Pressure proof 50V Sink current 50 mA
11	-	-	-	-	-
12	+24V	-	-	-	2A
13	+5V	-	-	-	500 mA
14	-	-	-	-	-
-	Waiting for Dispenser completion signal[*5] [*6]	Outputs signal while waiting for dispenser completion signal.	Open collector output	Low	Pressure proof 50 V Sink current 50 mA
-	Label near end[*5]	Output when detect label near end.	Open collector output	High	Pressure proof 50 V

Pin no.	Signal name	Contents	Input/Output	Level	Electric condition (voltage, current (MAX))
					Sink current 50 mA

*1 Select TYPE I-TYPE IV for No.6 pin “PREND” output signal. For details, refer to external signal type in Basic specification.

*2 No. 6 pin ”PREND” output signal is not output when “0” is specified as number of cuts for cut unit number command in cutter operation.

*3 When SW14 on IF board is set to 2-3, the printer operates by power supply from EXT5V_IN (No. 8 pin). When set to 1-2 side, the printer operates by internal power supply (Set to 1-2 side as shipment settings).

*4 When SW15 on IF board is set to 2-3, the no.9 pin operates as offline output. When set to 1-2 side, the printer operates as input (Set to 2-3 as shipment settings).

*5 Output pin No. can be set for Waiting for dispenser completion and label near end from Exit Signals from settings on GUI. Initial value: “Unspecified.”

*6 Output timing of print end signal (PREND) is changed when Wait signal for dispenser is set to valid. Please refer to "3) Output waiting for dispenser" in next section of "I/O signal" for details.

[Notes]

- External signal may become unstable for around 1 second after power on. Please control after 1 second.
- Signal level changes when the conditions in the “Contents” column are met.

  e.g. 1) For Pin no.1, signal level becomes Low when Paper End occurs. Then the switch is turned on and the current flows.
  e.g. 2) The print start signal for pin no.5 is when the signal is set to Low level and current flows.

[Supplementary Explanation]

- The mapping of pin no. and signal name (contents) can be changed via Interface > External I/O menu.

I/O signal

1) Input Signal

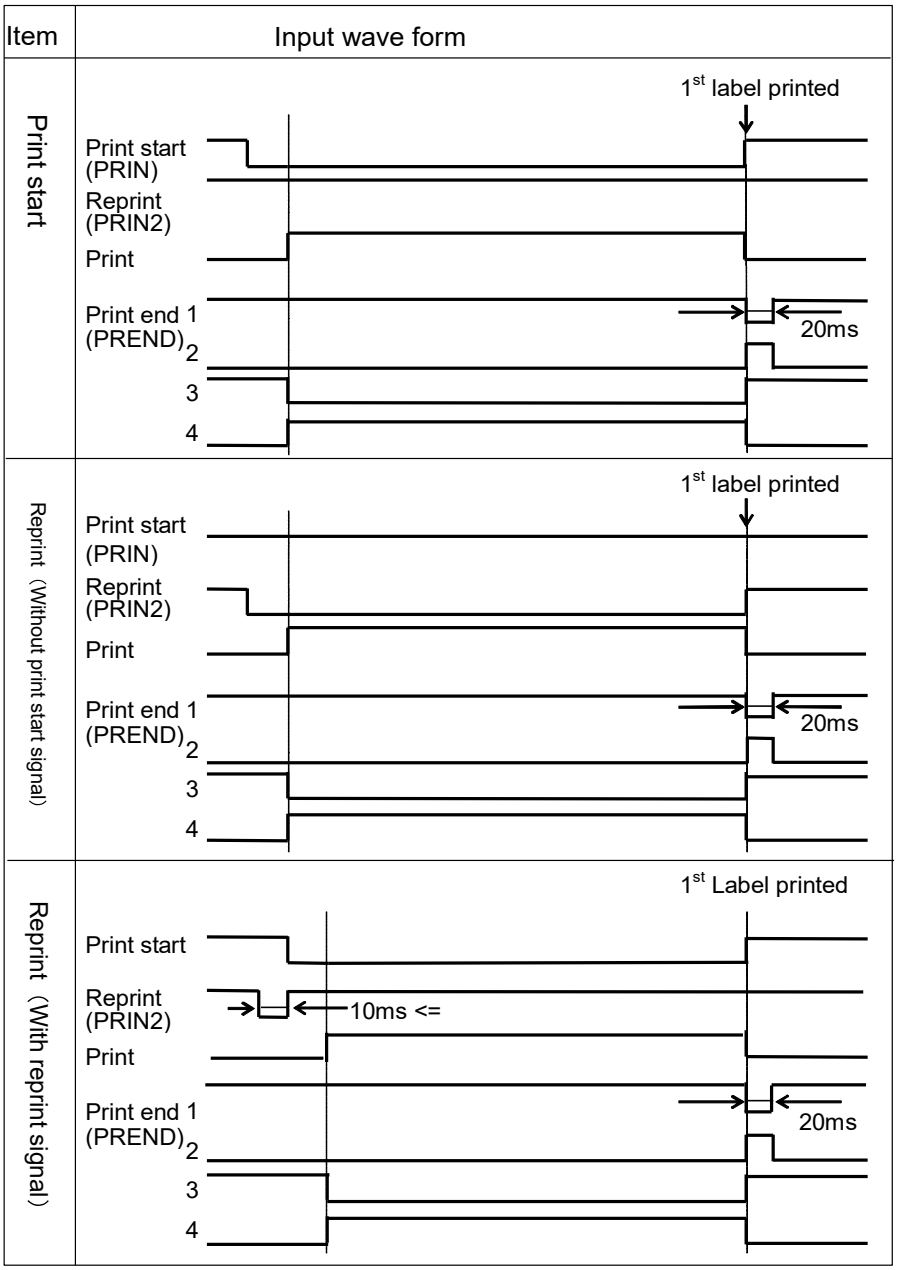

[Supplementary Explanation]

- Keep “Low” for print start signal (PRIN) until print end signal (PREND) is output.

  * (Refer to the following “Keeping print start signal (PRIN)” table.)
  Make sure to output 10 ms or more for reprint signal (PRIN2).
  Printer will not reprint if reprint signal cannot be detected from 10 ms and under.

- If NULL cut specified not output print end signal (PREND).

[Keeping print start signal (PRIN)]

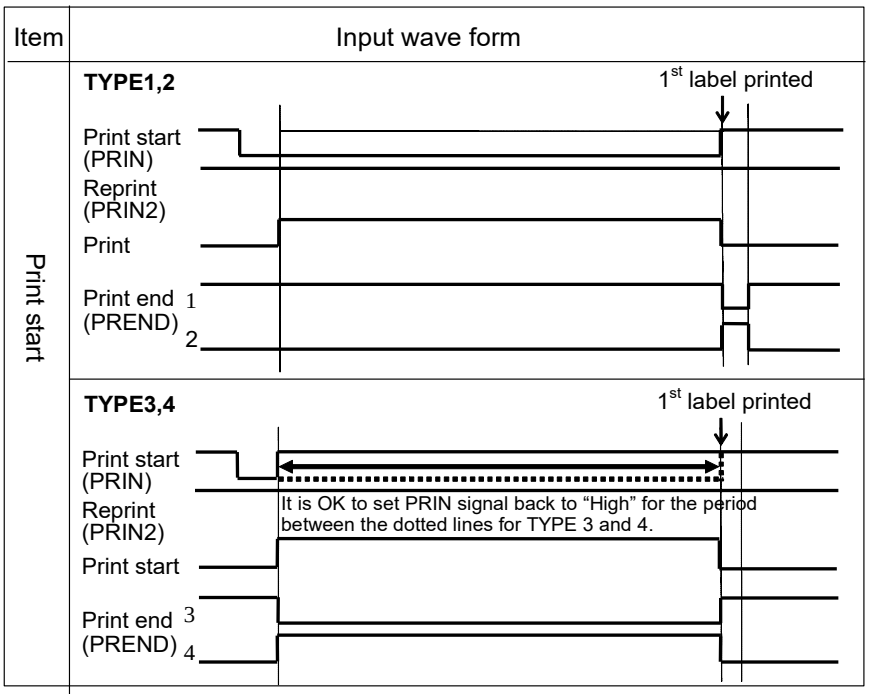

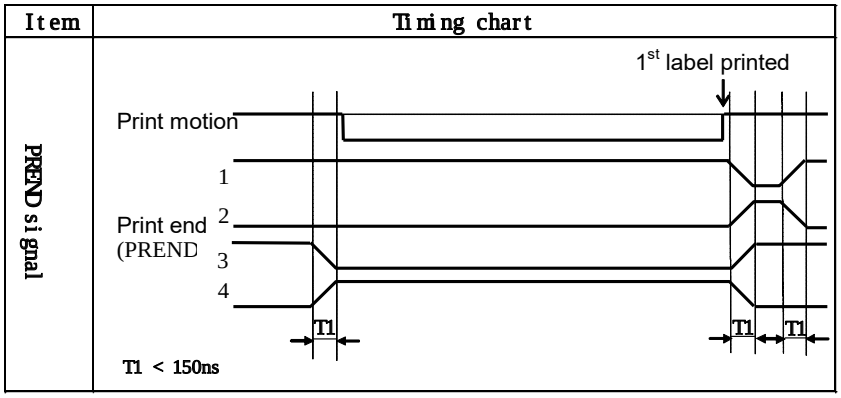

- The startup and shutdown of PREND signal takes 150 ms or less. Connected devices shall emit PRIN signal considering this time.
- When print start signal and reprint signal is emitted at the same time, print start signal is enabled and reprints.
- Reprint signal will be enabled from the end of printing (QTY=0) until receiving print data. The printer will not reprint other than that time.

2) Output signal

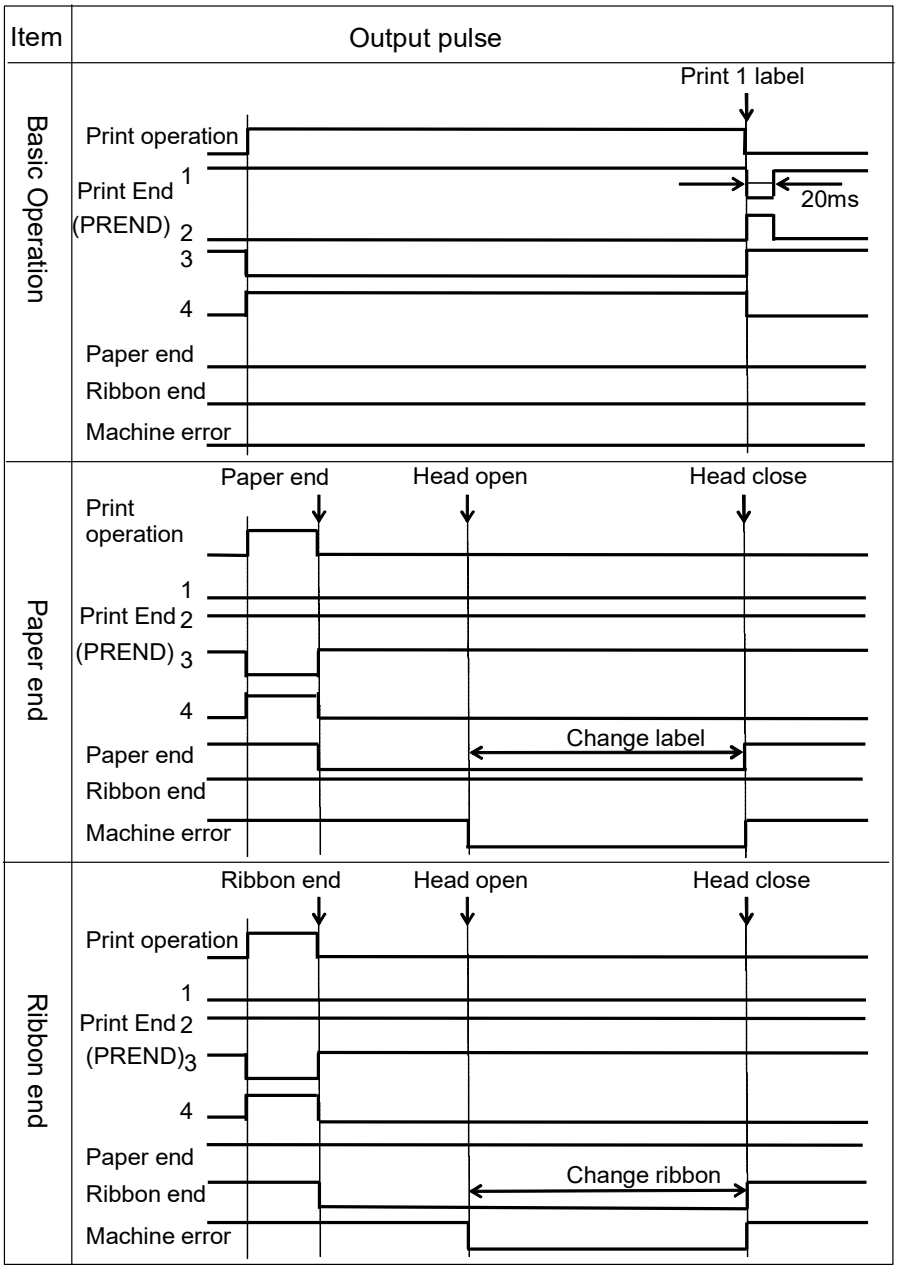

Item	Output pulse
Machine error	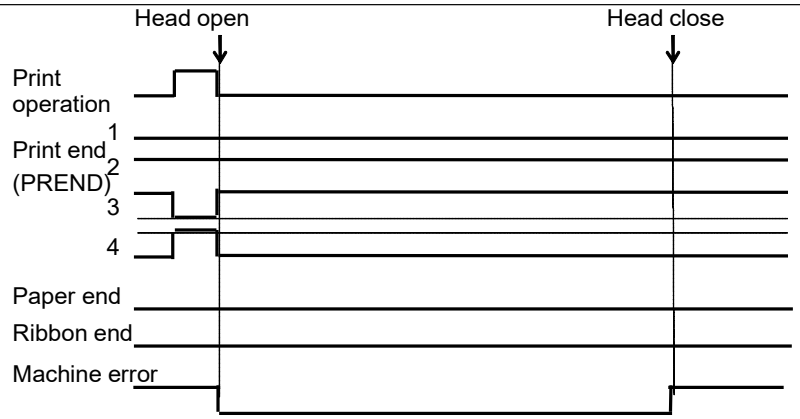

Item	Output pulse
Ribbon near end/Label near end	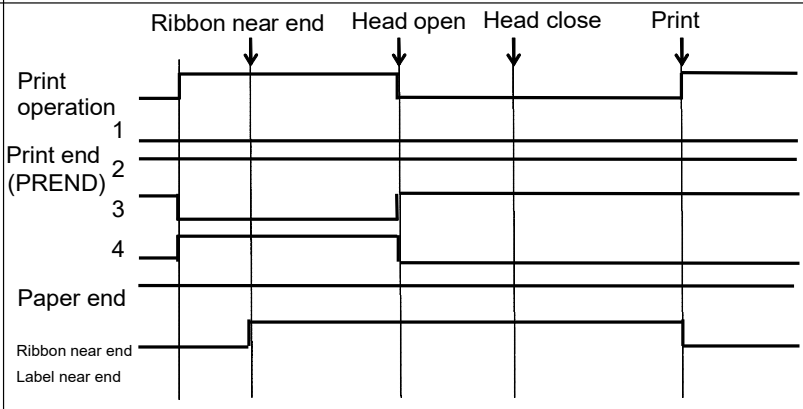

Item	Output pulse
Offline	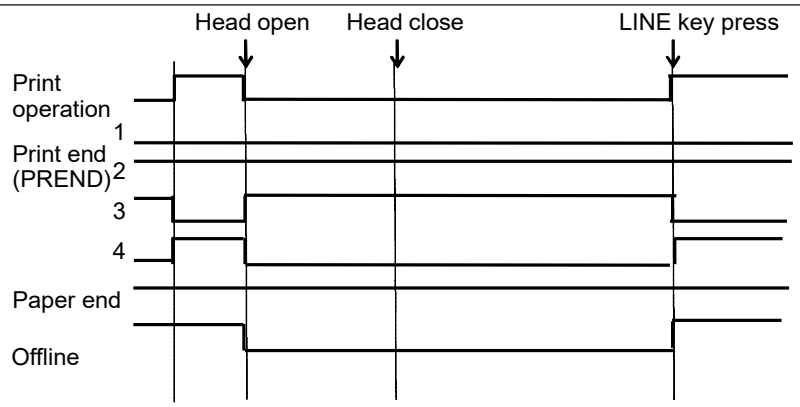

3) Output waiting for dispenser

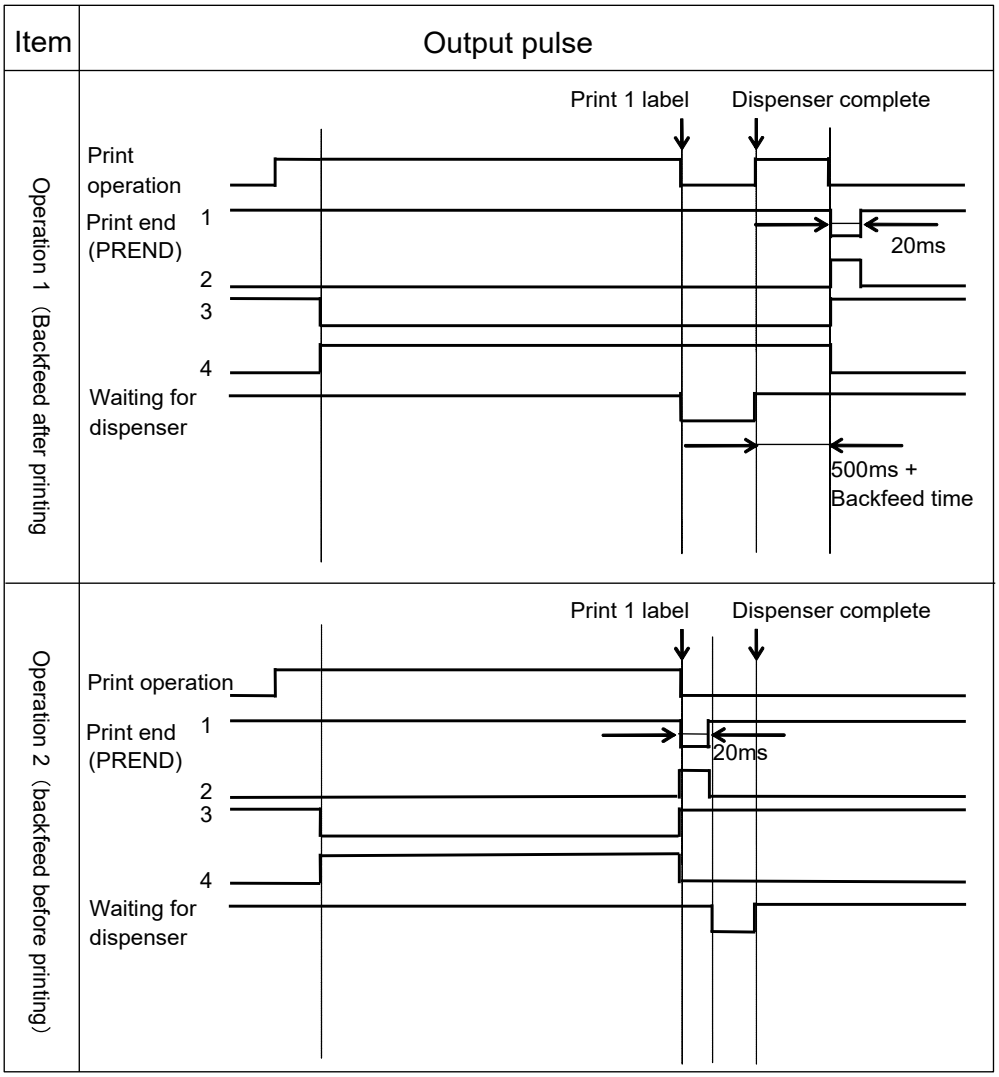

- Please note that Output timing of print end signal (PREND) is changed when Wait signal for dispenser is valid.

  Operation 1) Output Print End Signal after Wait label for dispenser is removed and backfeeding of label is completed to print start position.
  Operation 2) Output Print End Signal after feeding label to dispense position.

Timing Waveform

The input of external signal works under the conditions where colored in blue.

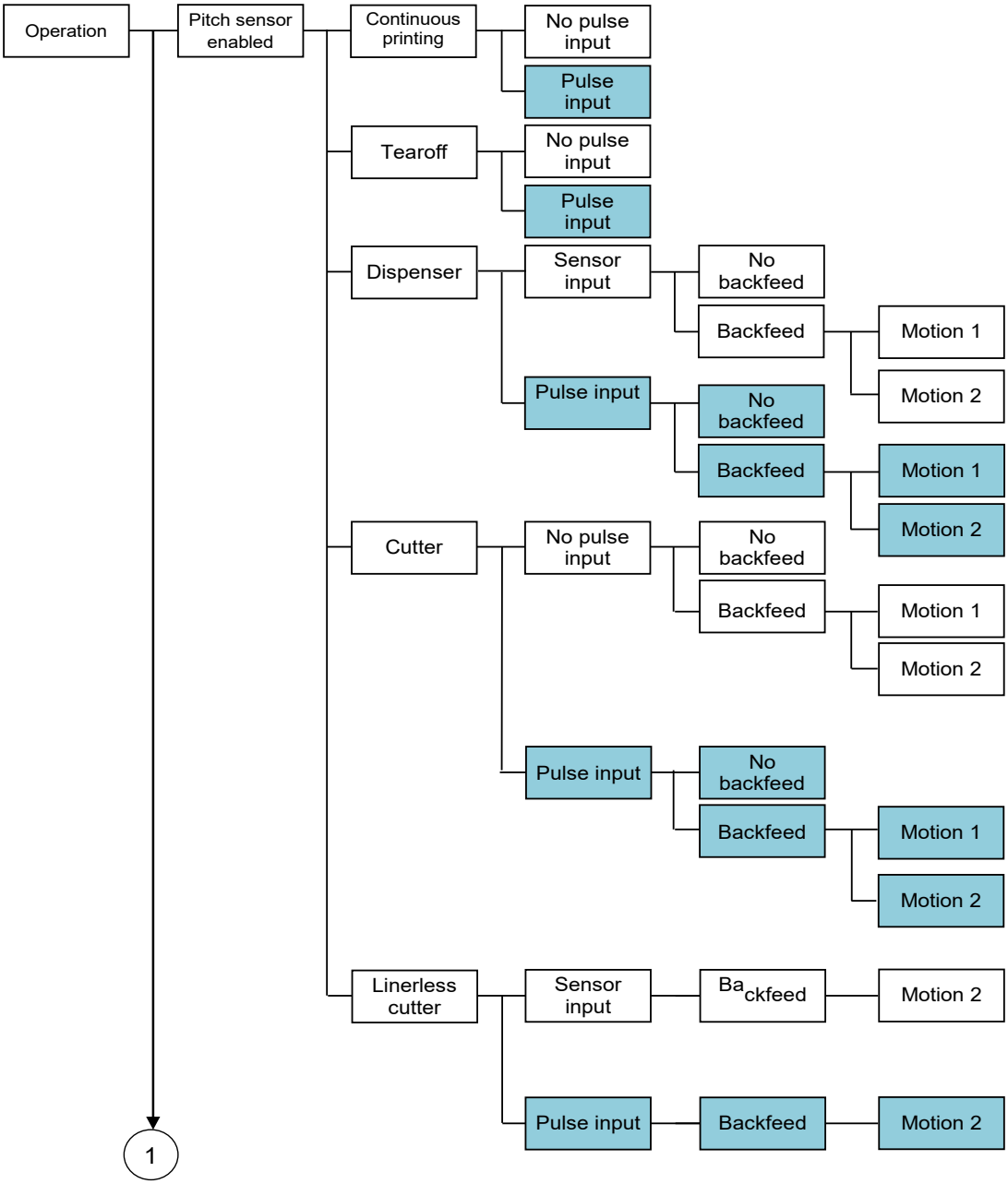

Motion 1: Backfeed after print
Motion 2: Backfeed before print

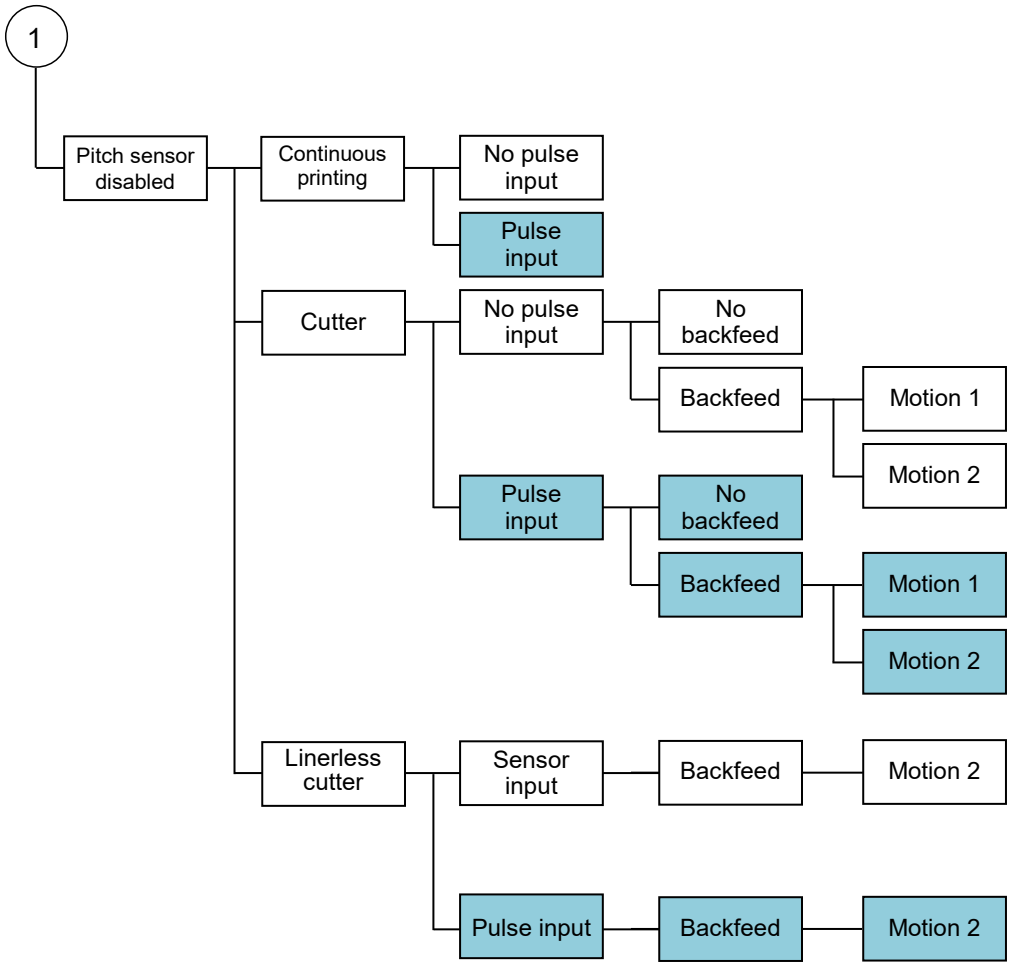

Motion 1: Backfeed after print
Motion 2: Backfeed before print

USB HOST

Basic Specifications

USB interface of this product comply with USB2.0 standard.

Interface

Type A (Female part)

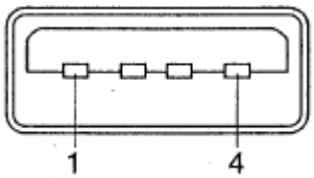

Back×1ch, Front×1ch

Connector

Series A plug

Length of cable: 5 m or less (Twisted Pair Shielded)

Version

USB2.0 High-speed

Device class

Mass storage class, HID class

Purpose of use

USB memory (HEX dump, Printer setting information, Firmware (install))

Connector Pin Assignment

Pin no.	Name
1	VBus
2	-Data(D-)
3	+Data(D+)
4	GND

NFC

Basic Specifications

Interface Standard

NFC forum Type 2 Tag compliant

Communication Distance

Height from center of antenna is 0 mm: right and left ±5 mm

Height from center of antenna is +10 mm: within the range of ±10 mm to both right and left

Baud Rate of Wireless Part

106 Kbps

Communication Settings

Enable/disable setting of communication behavior

Operation Mode

Power OFF: Tag mode (Write NDEF format to NFC tag)

Power ON: Pass through mode, Bluetooth/Wi-Fi handover

Communication Disconnection Time-out

1 second

NFC Receive Buffer Capacity

Tag mode: 888 bytes (Overall NFC tag memory)

Pass through mode: 51200 bytes

* The maximum communication volume in pass through mode.

Ex) In pass through mode, communication volume at a time is 50 Kbytes or less. ("NG" is returned if the communication volume is 50 Kbytes or more than receive data will be discarded)

Receive Buffer Size

2.95 MB

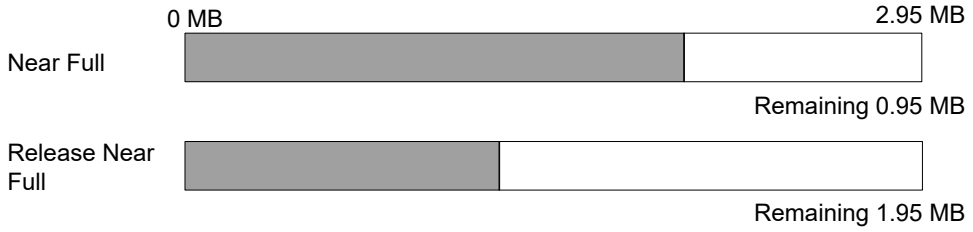

[Supplementary Explanation]

- NFC interface of this product uses NT3H1101 provided by NXP Semiconductors.
  It does not support single bytes command (Status communication).

NFC Allocation on This Product

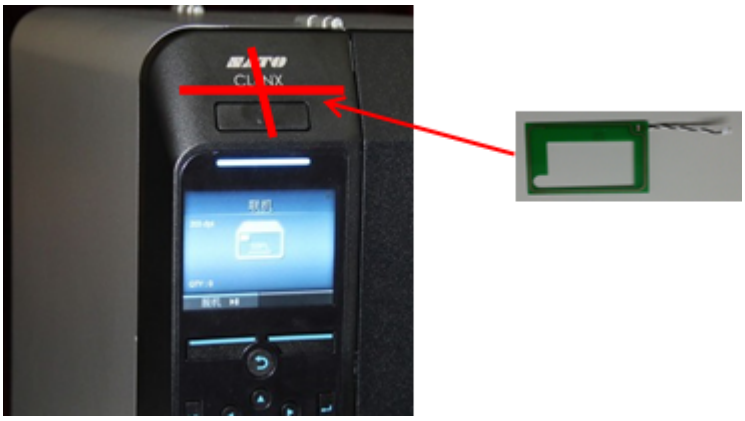

Tag Mode

This tag mode works when the power of this product is turned off.

It performs read/write from/to NFC tag memory (888 bytes).

Information on this product is written to NFC tag memory when the power of this product is turned off so that device can obtain the information.

When the information on this product is written to NFC tag memory, the content of NFC tag memory is sent to this product after turning on the power of this product.

Purpose: Printer setting, Information acquisition

Note

It is necessary to read information on device before writing to acquire information on device because area to be used for reading and writing is the same.

Valid range of NFC tag memory is 800 bytes.

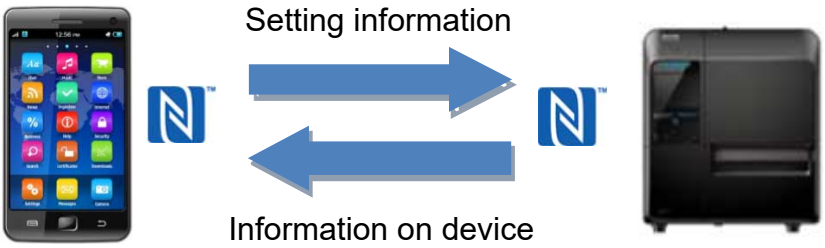

Data Format

Send Data Format

Compressed send data

Set send data after it is compressed with zip.

The maximum size of compressed send data is 800 bytes.

Received Data Format

Received data

Receive data is uncompressed text data.

Transmission Sequence

Normal End

Following shows the example of sequence for sending and receiving data.

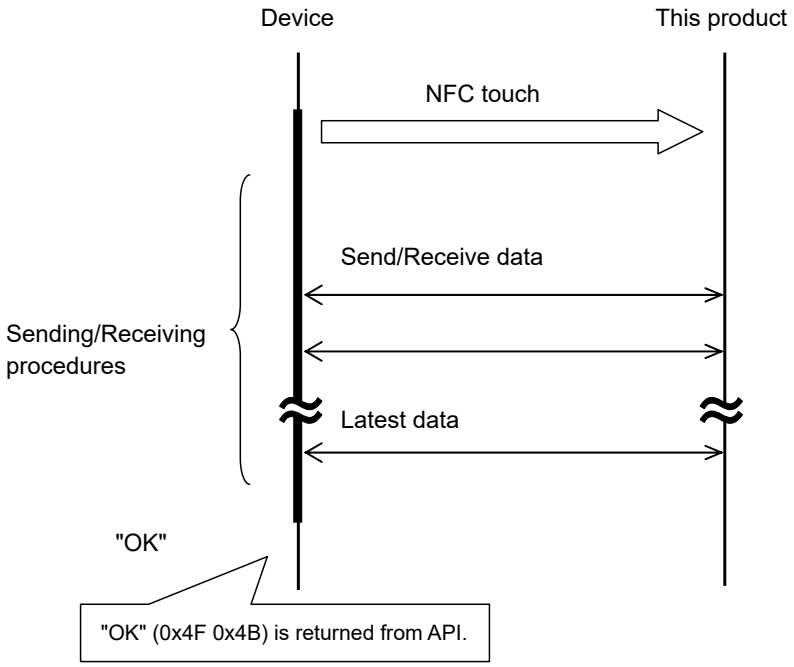

Abnormal End

"NG" is returned from API when there is communication error or tag memory error.

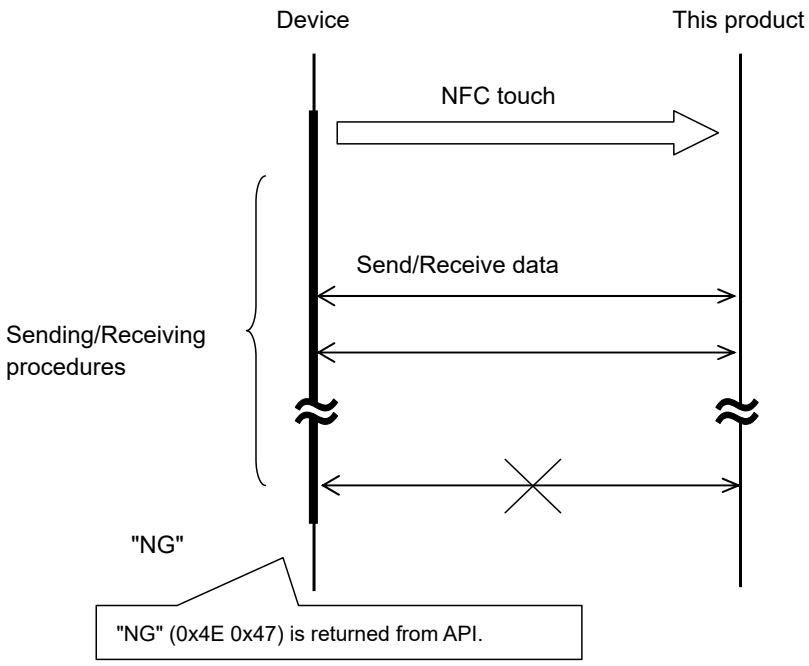

Pass-through Mode

This mode works when the power of this product is turned on.

Provides communication with this product via NFC tag.

Data communication is performed in between NFC device and NFC tag. The data is zipped and unzipped by NFC controller and is sent to this product directly (through).

Purpose: Send small SBPL data (Print), Acquisition of printer setting, value, and status.

* Small data here is about 1000 bytes (Assuming that device can hold this small data for two seconds or less due to the operation. 8 Kbps from actual measurement). Handover mode is recommended to handle data which is larger than 1000 bytes.

Note

If you are using NFC with this product is having near full operation (2 MB or more for printer receive buffer), please check the status of buffer (RS parameter) with DC2+PG command and control transmission (do not send print data until buffer near full is released) because this is not bidirectional communication.

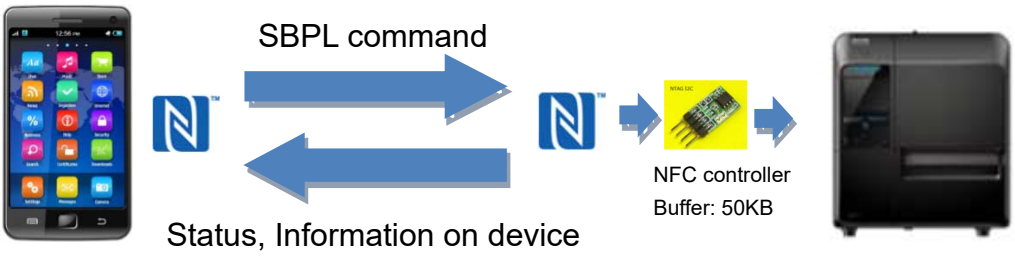

Data Format

Sent and Received Data Format

(1) Number of data byte 4 bytes	(2) Compressed send and received data	(3) CRC 2 bytes

(1) Number of data byte

Set the number of compressed send and received data byte to big endian.

(2) Compressed send and received data

Set send and received data after it is compressed with zip.

The maximum data size before compression is 51200 bytes.

(3) CRC

Set CRC of send and received data before compression. Use CRC-16-CCITT for CRC.

Please refer to "CRC-16 CCITT" to be described hereinafter for the details.

Transmission Sequence

Normal End

Following shows the example of sequence for sending and receiving data.

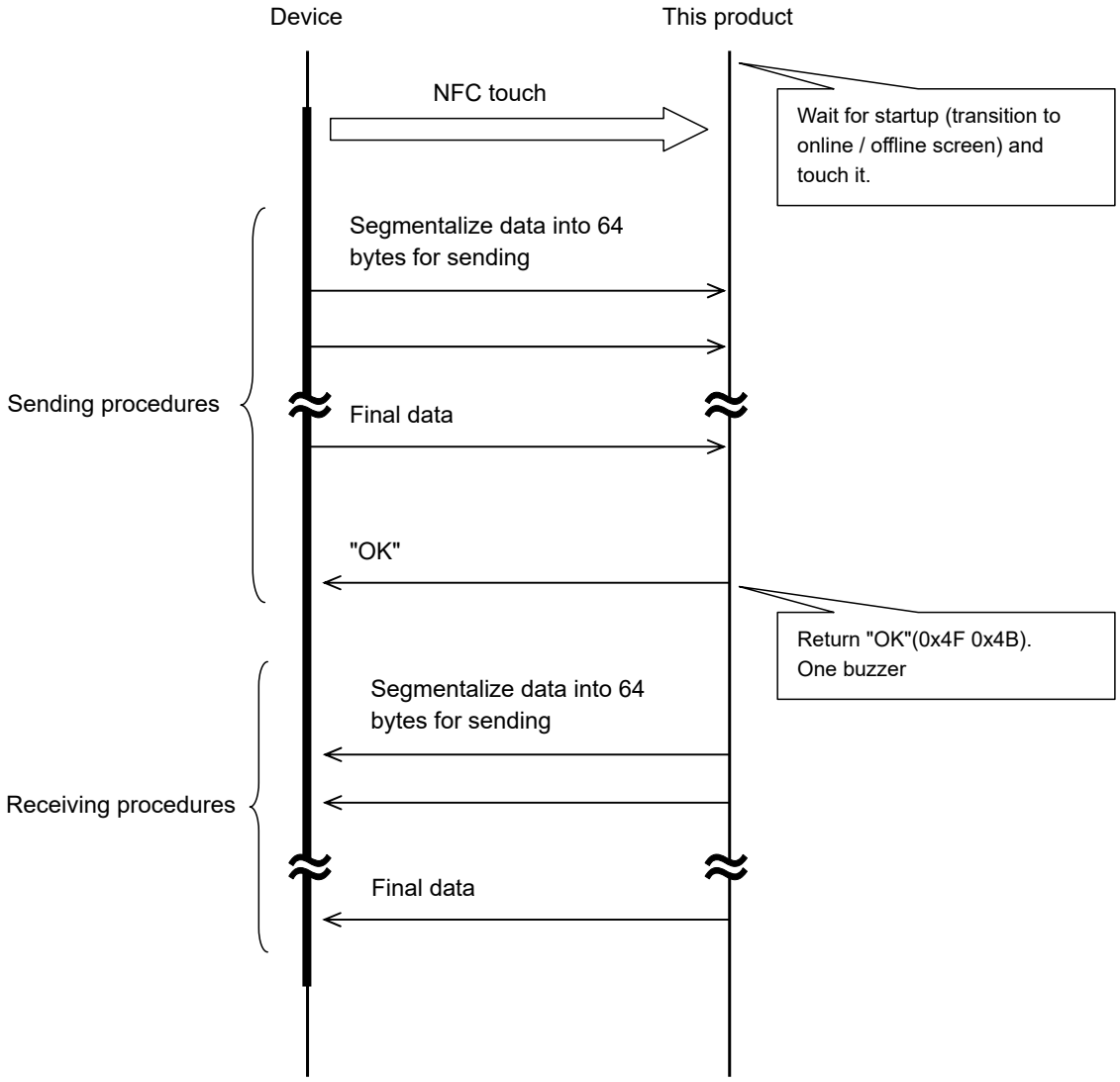

When a device is moved away from this product while the device is sending data to the product

This product will discard the received data.

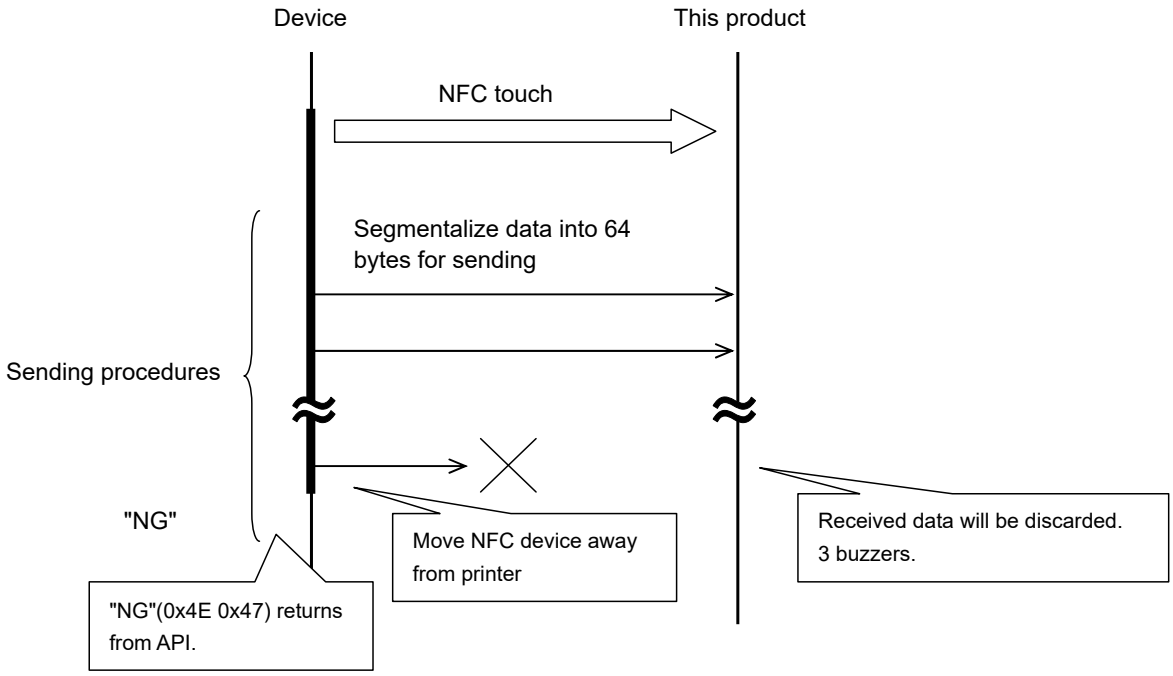

When a device is moved away from this product while the device is receiving data from the product

This product will discard send data.

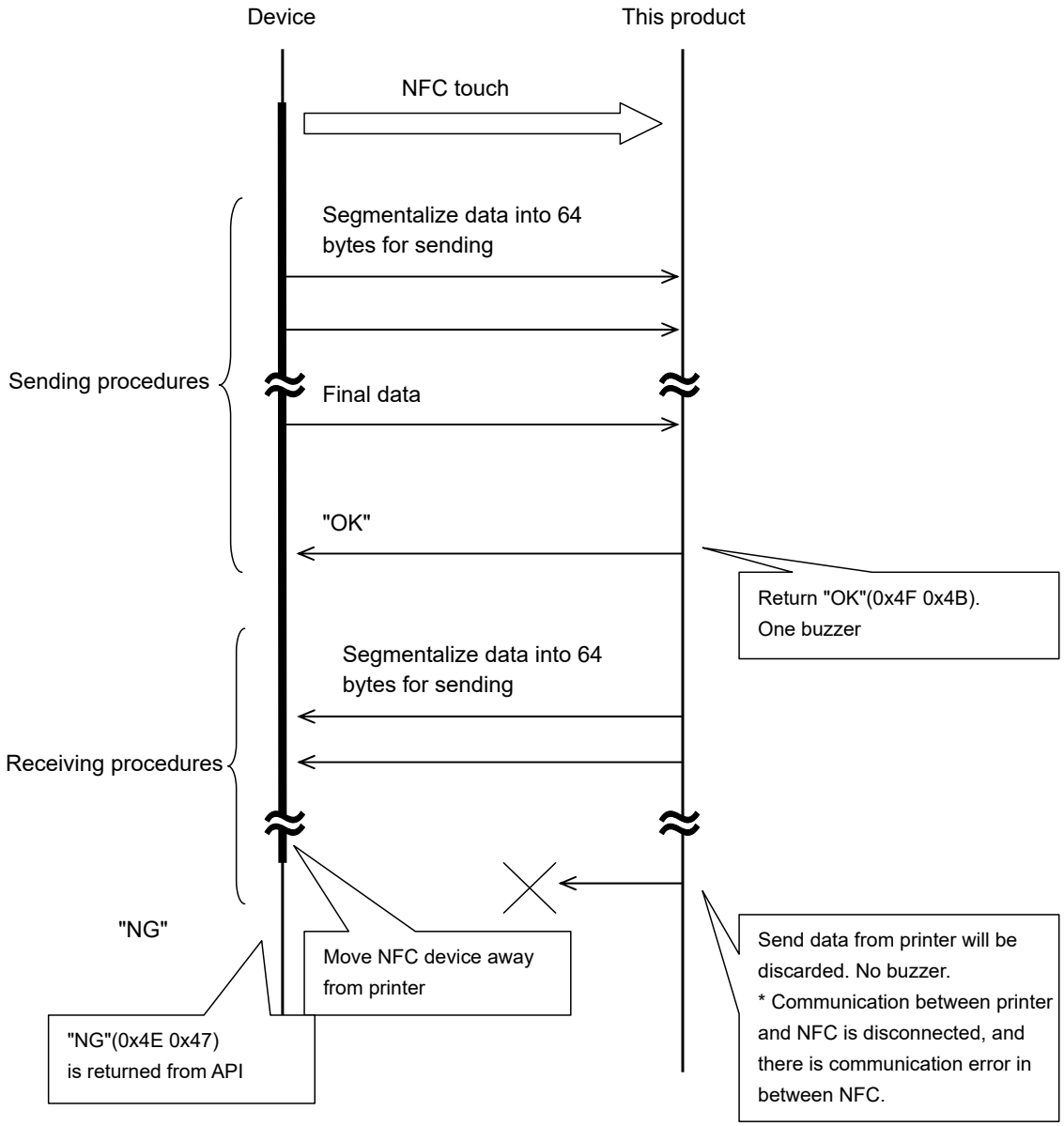

When CRC error occurs

This product will discard received data from this product then return "NG_CRCCHECK."

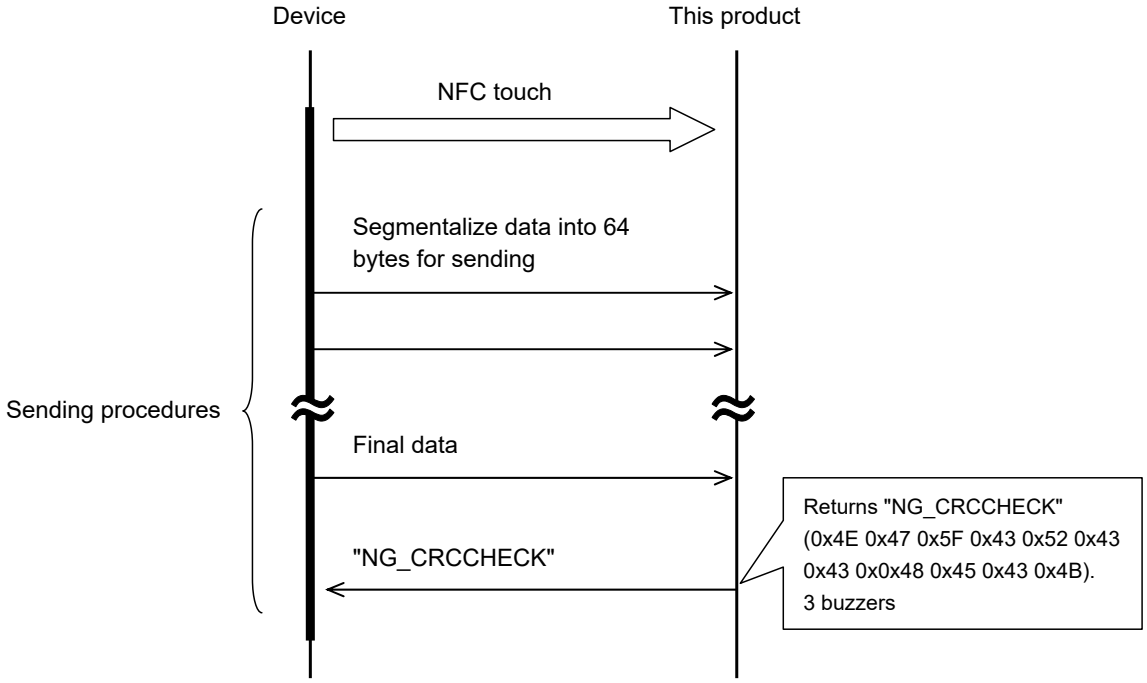

When NFC communication buffer over error occurs

This product will discard received data then return "NG_OTHER."

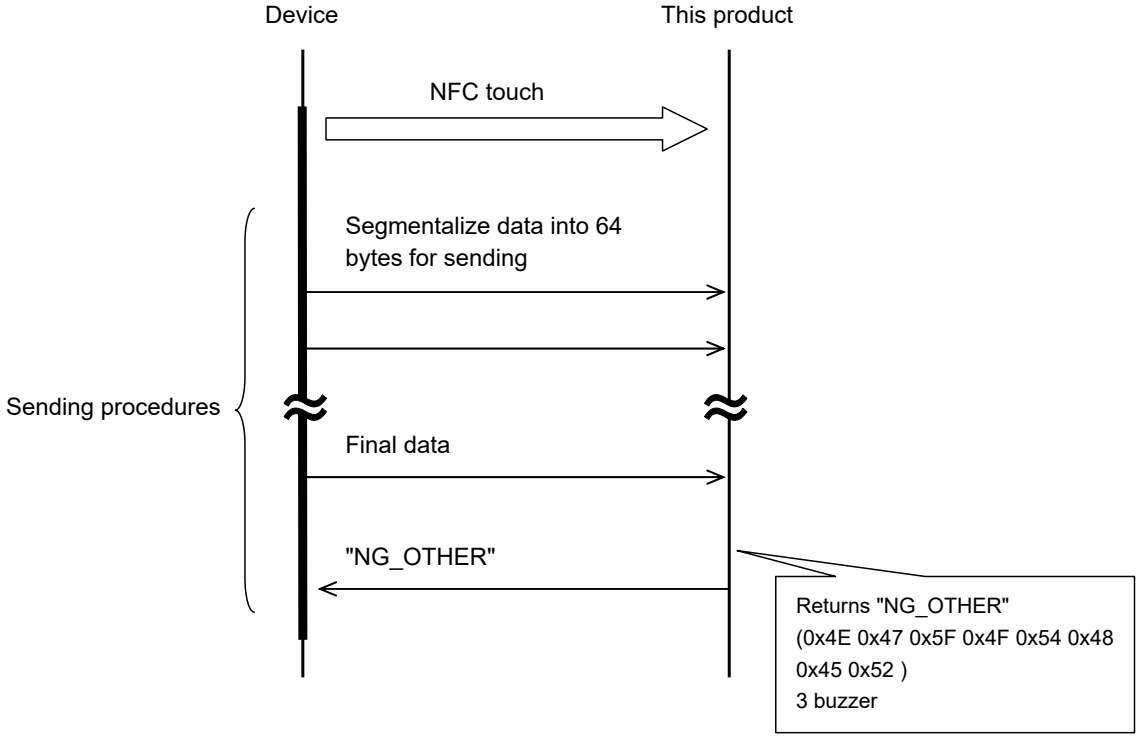

When UNCOMPRESS error occurs

The printer discards received data and returns "NG_UNCOMPRESS(CANNOT MALLOC)" or "NG_UNCOMPRESS(SIZE OVER)."

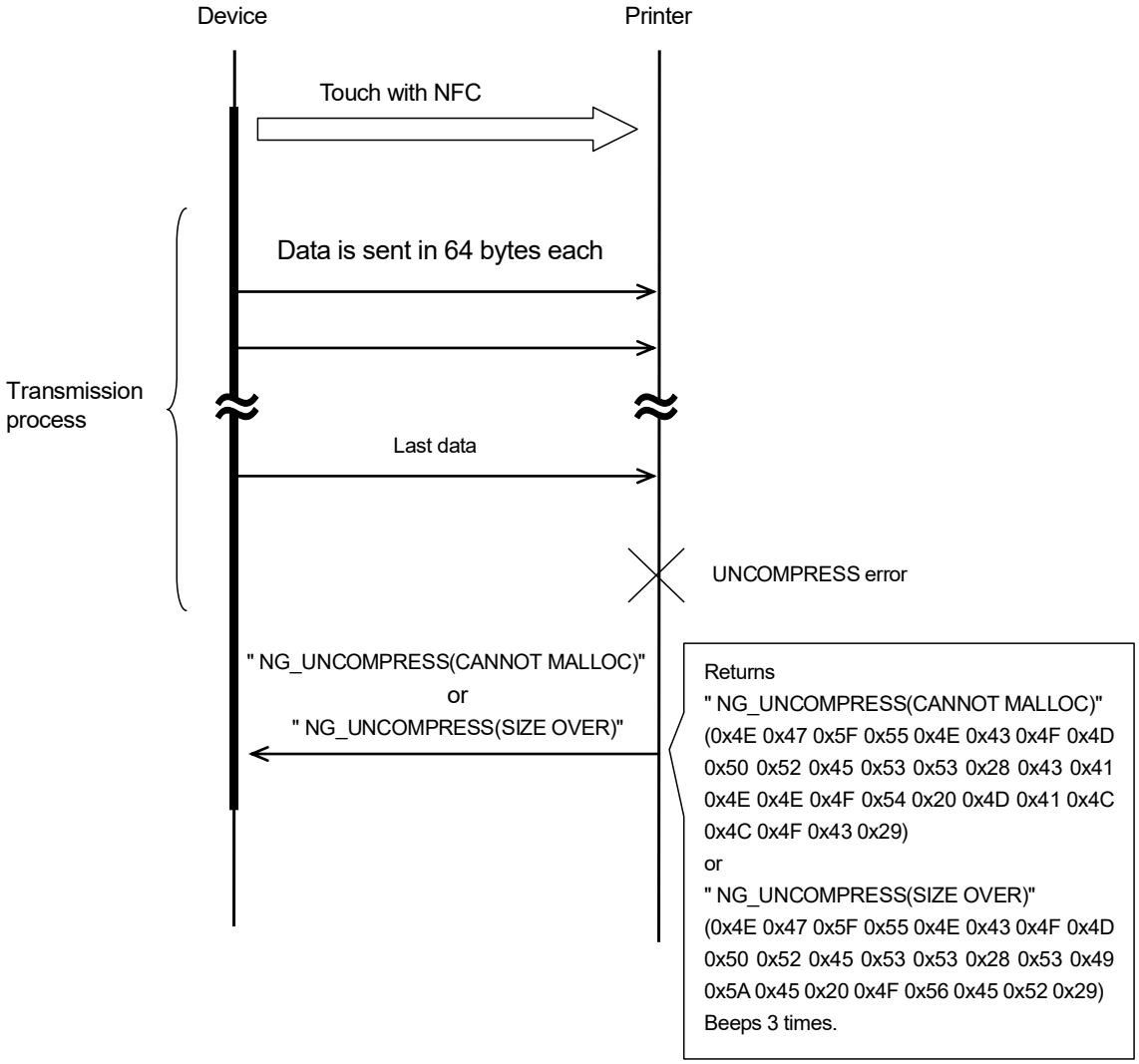

CRC-16-CCITT

Calculation range of CRC

Send and received data before compression is the calculation range.

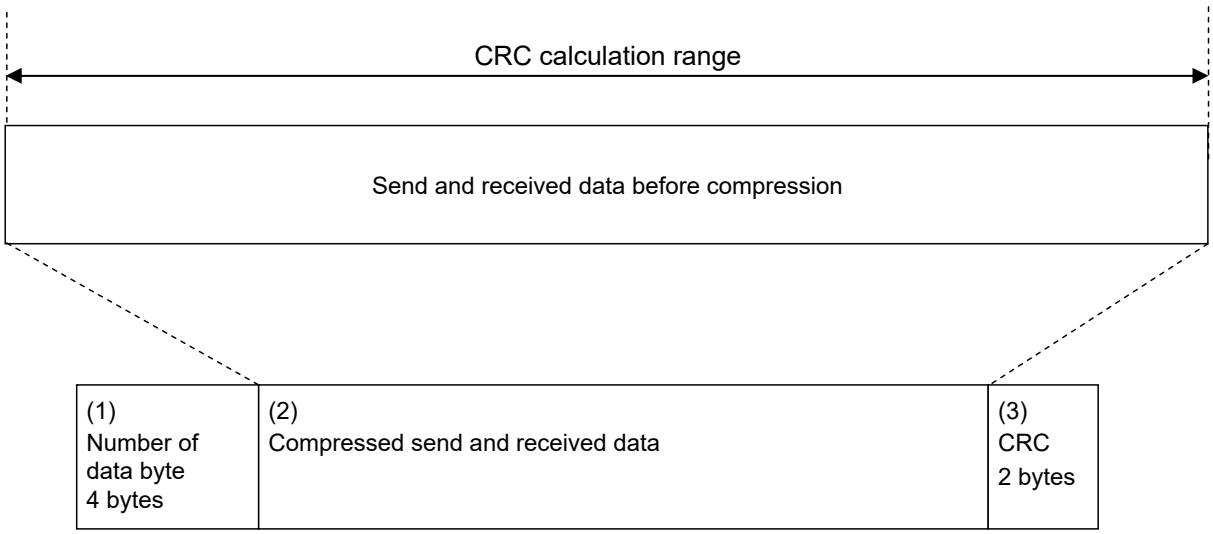

Method for calculating CRC

Use CRC-16-CCITT for calculating CRC.

Polynomial: X^16+X^12+X^5+X^0

Initial value: 0xFFFF

Following page shows an example of programming.

```
/* CRCtable */
unsigned short CRC16Table[ 256 ] = {
   0x0000, 0x1021, 0x2042, 0x3063, 0x4084, 0x50A5, 0x60C6, 0x70E7,
   0x8108, 0x9129, 0xA14A, 0xB16B, 0xC18C, 0xD1AD, 0xE1CE, 0xF1EF,
   0x1231, 0x0210, 0x3273, 0x2252, 0x52B5, 0x4294, 0x72F7, 0x62D6,
   0x9339, 0x8318, 0xB37B, 0xA35A, 0xD3BD, 0xC39C, 0xF3FF, 0xE3DE,
   0x2462, 0x3443, 0x0420, 0x1401, 0x64E6, 0x74C7, 0x44A4, 0x5485,
   0xA56A, 0xB54B, 0x8528, 0x9509, 0xE5EE, 0xF5CF, 0xC5AC, 0xD58D,
   0x3653, 0x2672, 0x1611, 0x0630, 0x76D7, 0x66F6, 0x5695, 0x46B4,
   0xB75B, 0xA77A, 0x9719, 0x8738, 0xF7DF, 0xE7FE, 0xD79D, 0xC7BC,
   0x48C4, 0x58E5, 0x6886, 0x78A7, 0x0840, 0x1861, 0x2802, 0x3823,
   0xC9CC, 0xD9ED, 0xE98E, 0xF9AF, 0x8948, 0x9969, 0xA90A, 0xB92B,
   0x5AF5, 0x4AD4, 0x7AB7, 0x6A96, 0x1A71, 0x0A50, 0x3A33, 0x2A12,
   0xDBFD, 0xCBDC, 0xFBBF, 0xEB9E, 0x9B79, 0x8B58, 0xBB3B, 0xAB1A,
   0x6CA6, 0x7C87, 0x4CE4, 0x5CC5, 0x2C22, 0x3C03, 0x0C60, 0x1C41,
   0xEDAE, 0xFD8F, 0xCDEC, 0xDDCD, 0xAD2A, 0xBD0B, 0x8D68, 0x9D49,
   0x7E97, 0x6EB6, 0x5ED5, 0x4EF4, 0x3E13, 0x2E32, 0x1E51, 0x0E70,
   0xFF9F, 0xEFBE, 0xDFDD, 0xCFFC, 0xBF1B, 0xAF3A, 0x9F59, 0x8F78,
   0x9188, 0x81A9, 0xB1CA, 0xA1EB, 0xD10C, 0xC12D, 0xF14E, 0xE16F,
   0x1080, 0x00A1, 0x30C2, 0x20E3, 0x5004, 0x4025, 0x7046, 0x6067,
   0x83B9, 0x9398, 0xA3FB, 0xB3DA, 0xC33D, 0xD31C, 0xE37F, 0xF35E,
   0x02B1, 0x1290, 0x22F3, 0x32D2, 0x4235, 0x5214, 0x6277, 0x7256,
   0xB5EA, 0xA5CB, 0x95A8, 0x8589, 0xF56E, 0xE54F, 0xD52C, 0xC50D,
   0x34E2, 0x24C3, 0x14A0, 0x0481, 0x7466, 0x6447, 0x5424, 0x4405,
   0xA7DB, 0xB7FA, 0x8799, 0x97B8, 0xE75F, 0xF77E, 0xC71D, 0xD73C,
   0x26D3, 0x36F2, 0x0691, 0x16B0, 0x6657, 0x7676, 0x4615, 0x5634,
   0xD94C, 0xC96D, 0xF90E, 0xE92F, 0x99C8, 0x89E9, 0xB98A, 0xA9AB,
   0x5844, 0x4865, 0x7806, 0x6827, 0x18C0, 0x08E1, 0x3882, 0x28A3,
   0xCB7D, 0xDB5C, 0xEB3F, 0xFB1E, 0x8BF9, 0x9BD8, 0xABBB, 0xBB9A,
   0x4A75, 0x5A54, 0x6A37, 0x7A16, 0x0AF1, 0x1AD0, 0x2AB3, 0x3A92,
   0xFD2E, 0xED0F, 0xDD6C, 0xCD4D, 0xBDAA, 0xAD8B, 0x9DE8, 0x8DC9,
   0x7C26, 0x6C07, 0x5C64, 0x4C45, 0x3CA2, 0x2C83, 0x1CE0, 0x0CC1,
   0xEF1F, 0xFF3E, 0xCF5D, 0xDF7C, 0xAF9B, 0xBFBA, 0x8FD9, 0x9FF8,
   0x6E17, 0x7E36, 0x4E55, 0x5E74, 0x2E93, 0x3EB2, 0x0ED1, 0x1EF0,
};

/* Function to calculate CRC */
unsigned short crc16(unsigned char *buffer, unsigned int size){
   unsigned short crc = 0xFFFF;
   while(size--){
      crc = CRC16Table[((crc>>8)^(*buffer++))&0xFF] ^ (crc<<8);
   }
   return crc;
}
```

Handover Mode

This mode works when the power of this product is turned on.

Read information on handover (Bluetooth, Wi-Fi connection), which is written to NFC tag memory when the power of this product is turned off, from NFC tag memory, then connection is established with Bluetooth or Wi-Fi based on the information.

Purpose: Send SBPL data (Print), Acquisition of printer setting, value, and status.

* Communication after connecting Handover shall be performed via Bluetooth or Wi-Fi.

Please refer to "Bluetooth" or "Wireless LAN" described before for data format and transmission.

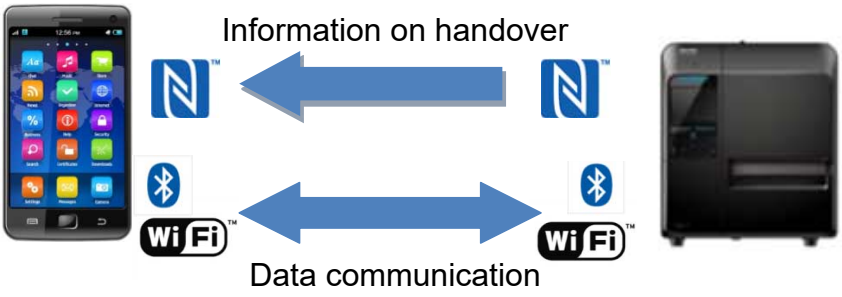

Notes about the Interface

Behavior after turning off this product

Please note that the data sent from host to this product will not be guaranteed after shutting down the product.

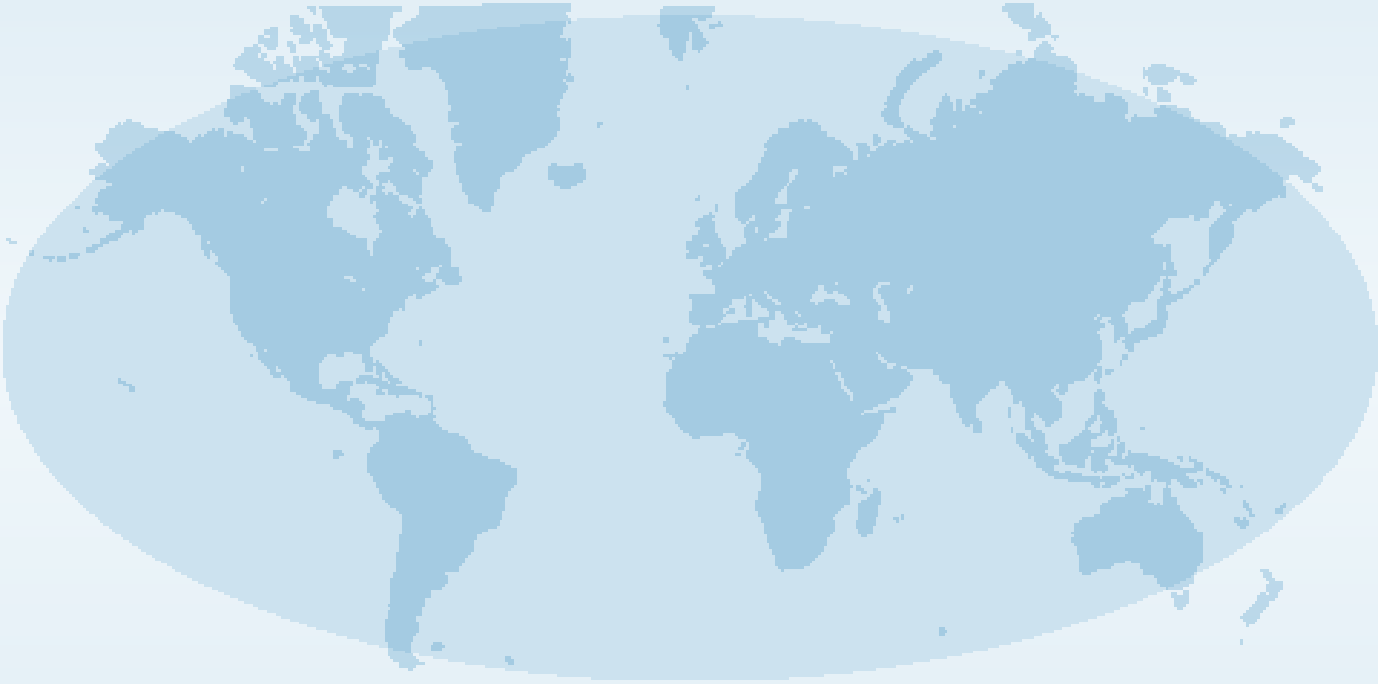

Extensive contact information for worldwide SATO operations can be found on the Internet at **www.satoworldwide.com**

SATO